Town of Auburn
Board of Selectmen
June 3, 2019
Town Hall

7:00 p.m.

( ) Call to Order – Pledge of Allegiance

Approval of Payroll Manifest for the Week of May 27, 2019 - $49,163.89
Approval of Accounts Payable Manifest for the Week of May 27, 2019 - $1,000.00
Approval of Accounts Payable Manifest for the Week of June 3, 2019
Approval of Consent Agenda – Week of June 3, 2019

( ) Appointments with the Board

- Parks & Recreation – Lights for Eddows Field

( ) New Business

Replacement of Mini Split System at Griffin Free Public Library
Community Forum / Meeting Potential
HB 616 – Employer Share of NHRS Costs to Increase
Household Hazardous Waste Collection – September 14th from 9 AM to Noon

( ) Old Business

Sale of Surplus Police Vehicle
Update on Property Tax Exemptions and Tax Credits – 2018
Haven Drive – Request to Reconsider Reducing Speed Limit to 30 MPH

( ) Report / Comments of Ex-officio Board Representatives

( ) Other Business

( ) Next Meetings / Events

Tuesday, June 11, 2019 – Joint Meeting with Auburn School Board – 7:00 PM
Monday, June 20, 2019 – Board of Selectmen's Meeting – 7 PM

( ) Minutes

- May 20, 2019 Public Meeting
- May 20, 2019 Non-Public Meeting

( ) Adjourn

Note: "Any person with a disability who wishes to attend this public meeting and needs to be provided reasonable accommodations in order to participate, please contact the Board of Selectmen's Secretary at (603) 483-5052 x100, so that arrangements can be made."

Wayne Eddows Field (Revised 4/16/19)

LightPolesPlus.com
888-791-1463
quotes@lightpolesplus.com

206 West McWilliams Street
Fond du Lac, WI 54935

Table of Contents

- Product Specifications
- Supplied Project Documents
- Photometric Lighting Layouts
- Additonal Information
- Quotation
- Signature

Product Specifications

LightPolesPlus.com
888-791-1463
quotes@lightpolesplus.com

206 West McWilliams Street
Fond du Lac, WI 54935

Project Name _____ Fixture Type _____

Catalog # _____

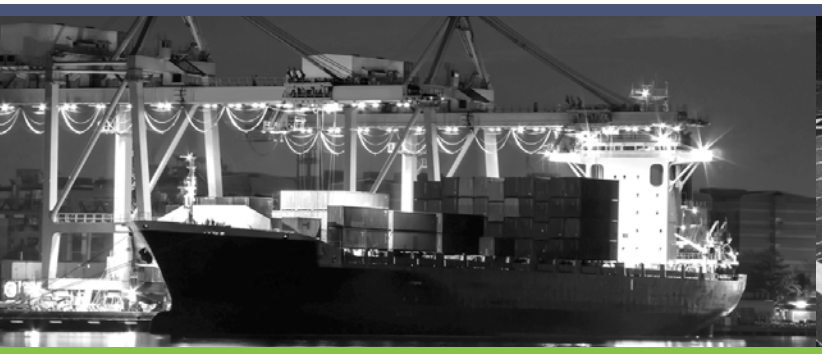

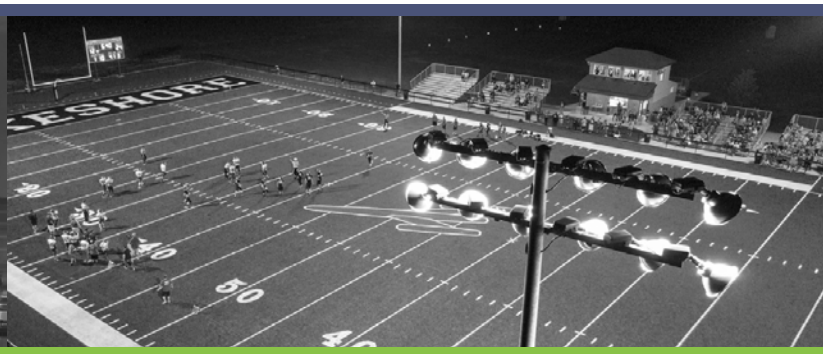

High-Output LED Flood & Sports Lighting, Heritage Series

Advanced light engine technology in a traditional housing design.
Wisconsin engineering and craftsmanship utilizing premium components.

Our LED lights, light poles and brackets are proudly engineered and manufactured in the USA. We use only the highest quality components, and our LED fixtures deliver unmatched light output and efficiency for the below lighting applications. Precision engineered for performance and energy savings, these products dramatically reduce energy consumption by up to 80% and virtually eliminate ongoing maintenance expenses for a variety of customers and applications.

Product Overview

Highlights:

- Engineered and manufactured in Wisconsin, USA from domestic and imported components
- ETL Certified: Conforms to UL STD 1598 & CSA STD C22.2 # 250.0 for wet locations
- L70 calculated LED life over 300,000+ hours
- Drivers are 0-10v dimming standard, PWM and Timer Dimming optional
- 50,126 nominal LED lumens and advanced silicone optical assembly
- Premium high-output Chip-On-Board (COB) LEDs in 5700K, 5000K, 4000K and 3000K options, custom color temps available upon request
- Minimum CRI of 70, custom CRI available
- Remote driver solutions available
- DLC qualified models available. Please refer to www.designlights.org for the most current information.

Common Applications:

- Container loading areas and general shipping yards
- Sports and stadium lighting
- General flood and area lighting

Light Engine Warranty:

- 5-year standard limited warranty on all light engine components
- Accessories and adders covered by separate OEM supplier warranties

lightpolesPLUS.com

Search www.designlights.org for qualifying models.

300,000+ HOURS LED LIFE

50-80% ENERGY SAVINGS

Engineered & Manufactured In The USA

206 W. McWilliams St.
Suite 101
Fond du Lac, WI 54935

888-791-1463
quotes@lightpolesplus.com
LightPolesPlus.com

Rev. V07302018

This specification brochure is intended to serve as a general guide. Our products are continually being engineered and improved, and specifications are subject to change without notice.

Product Specifications

Housing Construction, Finish & Mounting:

- Aircraft grade, laser cut, fabricated aluminum LED plate for superior strength and heat sinking
- Impact-resistant LED light engine
- Rugged, die-cast, aluminum driver housing with gasket and stamped aluminum cover for optimal thermal management
- Aluminum dome for maximum separation of LED engine and driver assembly, ensures cool operation of power supplies
- Architectural black finish over a chromate conversion coating (custom colors available upon request)
- Black anodized aluminum heat sink for maximum thermal dissipation
- Proprietary thermal management to ensure low LED junction temperature and deliver unmatched 300,000+ hour L70 life
- High-grade steel mounting stud
- Rugged, adjustable mounting yoke and tenon mount options

Optics & Lighting Distribution:

- Innovative silicone optics assembly with precision light control and cutoff
- Standard photometric distributions include V-WIDE, 30° NARROW SPOT and 70° MEDIUM SPOT
- IES files, photometric reports and simulations available upon request
- Left and right optical rotation available

LEGEND

0.5 fc | 2.0 fc | 5.0 fc | 10 fc | 25 fc

Created & Simulated per IESNA LM-63-1995

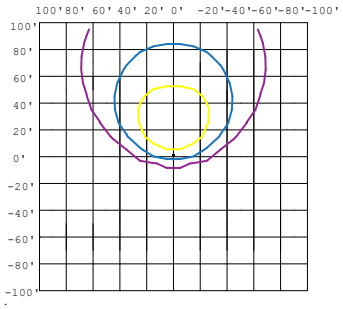

350w Sports Lighter
70° Medium Spot
50' Height at 45°

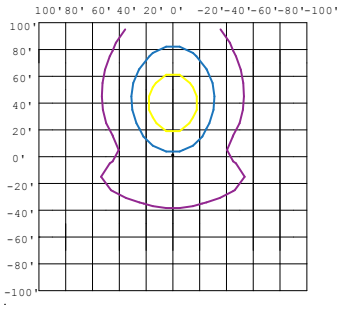

350w Sports Lighter
30° Narrow Spot
50' Height at 45°

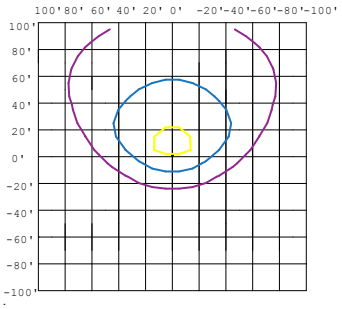

350w Sports Lighter
100° Type V
50' Height at 45°

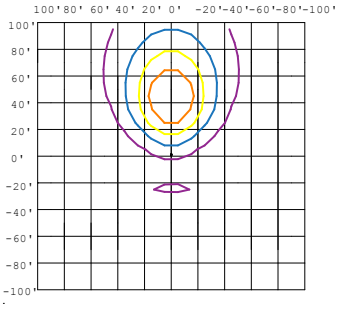

350w Sports Lighter
Custom Distribution (SuperSport)
50' Height at 45°

Electrical:

- Operating temp: -40 ℃ to +45 ℃
- Standard AC input of 120-277v VAC, up to 480v available
- EMI filter: 47CFR, part 2, part 15
- Power factor: >0.9
- Total harmonic distortion: <20%
- Surge protection: IEC/EN 61000-4-5 EMC test standard
- Licensed electrician required for installation

Energy Control Options:

- Daylight harvesting and photo controls
- Motion control and dimming
- Surge protection
- CA Title 24 compliance options available upon request

Effective Projected Area (EPA) & Weight:

- 2.75 EPA
- 35 LBS

Search www.designlights.org for qualifying models.

300,000+ HOURS LED LIFE

50-80% ENERGY SAVINGS

Engineered & Manufactured In The USA

lightpolesPLUS.com

206 W. McWilliams St.
Suite 101
Fond du Lac, WI 54935

888-791-1463
quotes@lightpolesplus.com
LightPolesPlus.com

Rev. V07302018

This specification brochure is intended to serve as a general guide. Our products are continually being engineered and improved, and specifications are subject to change without notice.

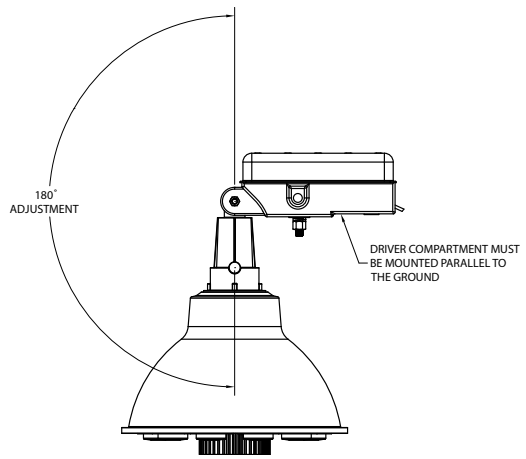

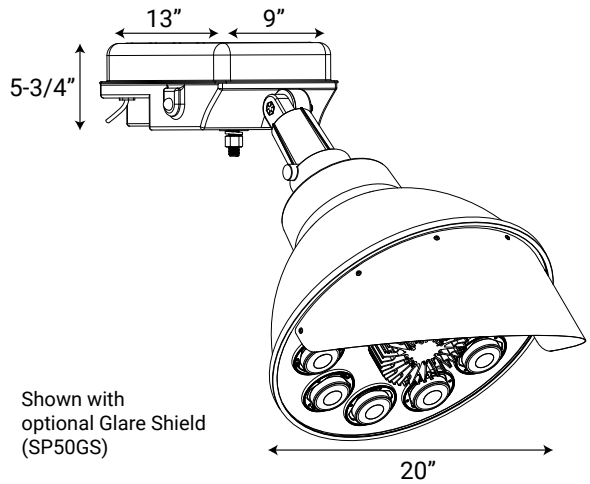

Light Engine Specifications (Values Listed for 70° Medium Spot, 5000K)

Base Model	System Watts	LED Watts	HID Replacement[1]	Number of COBs	Drive Current	Max Operating Temp	Nominal Lumens[2]	Delivered Lumens[3]	L70 EnergySTAR LED Life[4]
20-SPZC-350-50-MV-70	354w	318w	1000-1500w	10	950 mA	45 ℃	50,126	46,250	300,000+ Hrs

*DLC qualified model with 30, 70 and 5M optics.

Light Engine Specifications (Values Listed for 70° Medium Spot, 5700K)

Base Model	System Watts	LED Watts	HID Replacement[1]	Number of COBs	Drive Current	Max Operating Temp	Nominal Lumens[2]	Delivered Lumens[3]	L70 EnergySTAR LED Life[4]
20-SPZC-350-57-MV-70	353w	326w	1000w	8	1,200 mA	45 ℃	55,310	52,360	285,500+ Hrs
20-SPZC-440-57-MV-70	440w	407w	1500w	10	1,200 mA	45 ℃	68,484	64,375	285,500+ Hrs

Amperage Load

Wattage	Total Amps Per Fixture							
	110v	120v	208v	220v	240v	277v	347v	480v
354w	3.22A	2.95A	1.7A	1.61A	1.48A	1.28A	1.02A	0.74A
353w	3.21A	2.94A	1.7A	1.6A	1.47A	1.27A	1.02A	0.74A
440w	4A	3.67A	2.12A	2A	1.83A	1.59A	1.27A	0.92A

Lumen Maintenance Factor (LMF)[4]

Type	Ambient	Initial LMF	25K Hour Projected LMF[5]	50K Hour Projected LMF[5]	75K Hour Projected LMF[6]	100K Hour Projected LMF[6]
COB	25 ℃ (77 ℉)	100%	96%	94%	92%	90%

1. Considered to be a typical HID equivalent. Specific HID wattage equivalents will depend on things like environmental and application characteristics, distribution type and design criteria.
2. Considered initial nominal value of the LED light engine as specified by the LED chip manufacturer. Fixture efficacy and lumen output will depend on things like color temperature, distribution type and environmental characteristics.
3. Considered the typical initial delivered lumens of the LED light engine. Specific lumens for an application will depend on things like color temperature, distribution type and environmental characteristics.
4. Lumen maintenance values at 25 ℃ are calculated per TM-21 based on LM-80 data and in-house luminaire testing.
5. In accordance with IESNA TM-21-11, Projected Values represent interpolated value based on time durations that are within six times (6X) the IESNA LM-80-08 total test duration (in hours) for the device under testing (DUT) i.e. the packaged LED chip.
6. In accordance with IESNA TM-21-11, Calculated Values represent time durations that exceed six times (6X) the IESNA LM-80-08 total test duration (in hours) for the device under testing (DUT) i.e. the packaged LED chip.

Note: Additional wattages and configurations available upon request. Specifications are subject to change without notice.

Search www.designlights.org for qualifying models.

300,000+ HOURS LED LIFE

50-80% ENERGY SAVINGS

lightpolesPLUS.com

206 W. McWilliams St.
Suite 101
Fond du Lac, WI 54935

888-791-1463
quotes@lightpolesplus.com
LightPolesPlus.com

Rev. V07302018

This specification brochure is intended to serve as a general guide. Our products are continually being engineered and improved, and specifications are subject to change without notice.

Ordering Information

Ex. 20-SPZC-350-50-MV-70-BK-STUD

Designation	
20-SPZC	= 20" Sports Light

Color Temp.	
57	= 5700K
50	= 5000K
40	= 4000K
30	= 3000K
CT	= Custom

Wattage	
350	= 350 Watt
440	= 440 Watt

Input Voltage	
MV	= 100-277v
HV	= 277-480v
CV	= Custom

Distribution Type	
5M	= 100° Type V
5W	= 150° Wide
5N	= 20° Narrow SuperSport Spot
70	= 70° Medium Spot
30	= 30° Narrow Spot
CD	= Custom

Color	
BK	= Black
DB	= Dark Bronze
WH	= White
SG	= Slate Gray
LG	= Light Gray
DG	= Dark Green
NA	= Nat. Alum. Paint
SC	= Custom Color

Accessories	
Mounting	
STUD	= 5/8-18 Zinc-Plated Bolt, Nut, Washer and Lock Washer
SP50Y	= Stamped Heavy Duty Steel Yoke Mount
SP50PT	= Pole Top Tenon Mount
Controls	
SPC1	= Swivel Photocontrol, 120 VAC
SPC2	= Swivel Photocontrol, 208 to 277 VAC
SPC3	= Swivel Photocontrol, 347 VAC
SPC4	= Swivel Photocontrol, 480 VAC
SRG1	= Surge Protector, 120v - 277v
SRG4	= Surge Protector, 347v - 480v
F10	= 10 Amp Fuse Kit, 120-480 VAC
Other	
WHP11NP	= 11' Cord w/o Plug, Stripped Pigtail Both Ends (Not Installed)
WHP7NP	= 7' Cord w/o Plug, Stripped Pigtail Both Ends (Not Installed)
WHP11P1	= 11' Cord w/ NEMA 5-15P, Stripped Pigtail One End (Not Installed)
WHP7P1	= 7' Cord w/ NEMA 5-15P, Stripped Pigtail One End (Not Installed)
WHP3NP	= 3' Cord w/o Plug, Stripped Pigtail Both Ends (Not Installed)
WHP3P1	= 3' Cord w/ NEMA 5-15P, Stripped Pigtail One End (Not Installed)
GSSPZ	= Glare Shield (Hardware Included - Not Installed)

Mounting Accessories

SP50Y

SP50PT

STUD (standard)

* Many lens options available, contact us for more options

Search www.designlights.org for qualifying models.

300,000+ HOURS LED LIFE

50-80% ENERGY SAVINGS

lightpolesPLUS.com

206 W. McWilliams St.
Suite 101
Fond du Lac, WI 54935

888-791-1463
quotes@lightpolesplus.com
LightPolesPlus.com

Rev. V07302018

This specification brochure is intended to serve as a general guide. Our products are continually being engineered and improved, and specifications are subject to change without notice.

MANUFACTURED in WISCONSIN

Wisconsin manufacturing. Second to none.

- 10,000+ Wisconsin manufacturers employ 470,000+ workers and contributed $56 billion to economic growth in 2016.
- Wisconsin's manufacturing concentration is 87 percent higher than the national average.
- Industrial machinery ranks first among Wisconsin manufacturing jobs.
- Increasing international recognition of Wisconsin manufacturing expertise through Haribo and Foxconn investments.

WHY LPP MATTERS

- In the highly competitive manufacturing hotbed of Wisconsin, LPP's history of success dates to the 1970s.
- Our experience spans aluminum castings, metal fabrication and machining, electrical design and assembly, industrial finishing, and thermal testing.

Sources:
(1) http://reliableplant.com/Read/30986/wisconsin-manufacturing-jobs
(2) https://www.wmc.org/news/manufacturing-is-strong-in-wisconsin/
(3) BizTimes Media, LLC (October 20, 2016)

"What is it with Wisconsin? You guys are like the Silicon Valley of Lighting!"
- Valued Customer

TWO LIGHT CROSSARM BRACKET

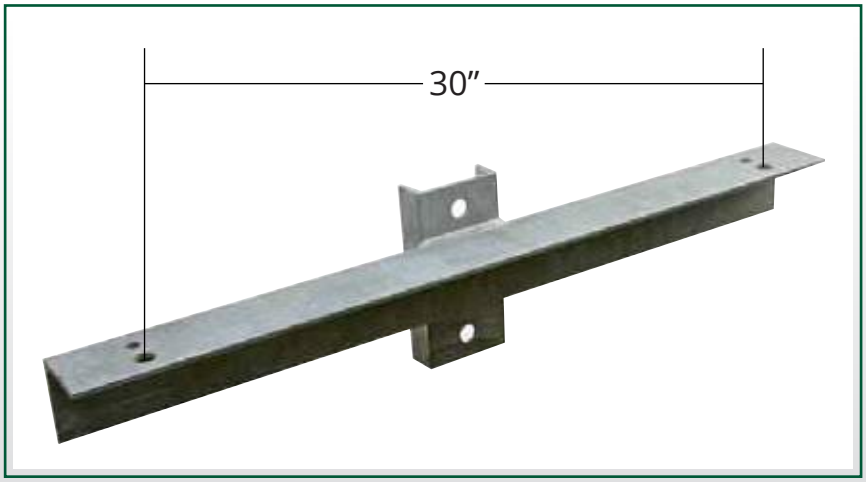

- Mounting hardware not included
- Minimum pole diameter for mounting is 4”

AVAILABLE IN THESE FINISHES

Dark Bronze	DB
Black	BK
White	WH
Grey	GR
Natural Aluminum	NA
Hot Dip Galvanized	GV
Red Prime	PP

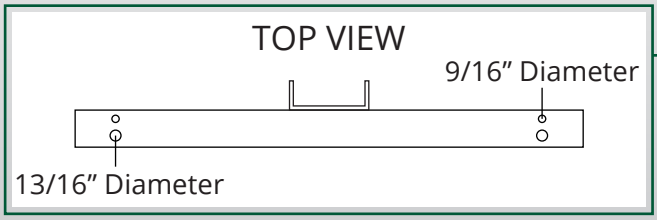

STEEL

Catalog Number	WT./LBS
UM-S-ACR-BTP-2-180-FP	21
UM-S-ACR-BTP-2-180-GV	23

THREE LIGHT CROSSARM BRACKET WITH STANDOFF

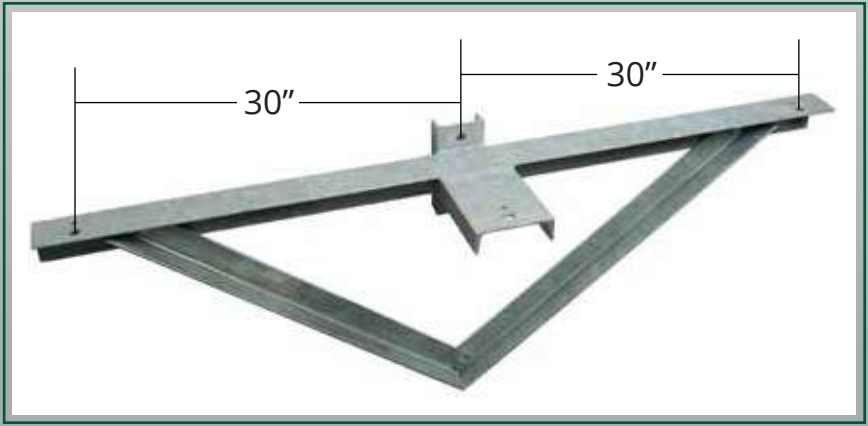

- Mounting hardware not included
- Minimum pole diameter for mounting is 4”

AVAILABLE IN THESE FINISHES

Dark Bronze	DB
Black	BK
White	WH
Grey	GR
Natural Aluminum	NA
Hot Dip Galvanized	GV
Red Prime	PP

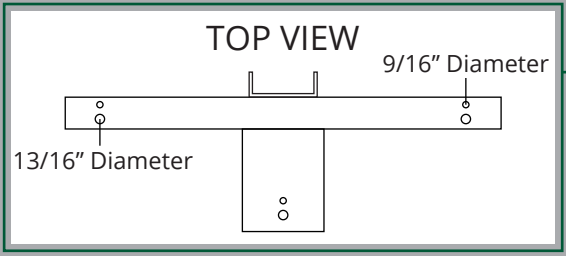

STEEL

Catalog Number	WT./LBS
UM-S-ACRU-BTP-3-180-FP	68
UM-S-ACRU-BTP-3-180-GV	73

FOUR LIGHT CROSSARM BRACKET

- Mounting hardware not included
- Minimum pole diameter for mounting is 4”

AVAILABLE IN THESE FINISHES

Dark Bronze	DB
Black	BK
White	WH
Grey	GR
Natural Aluminum	NA
Hot Dip Galvanized	GV
Red Prime	PP

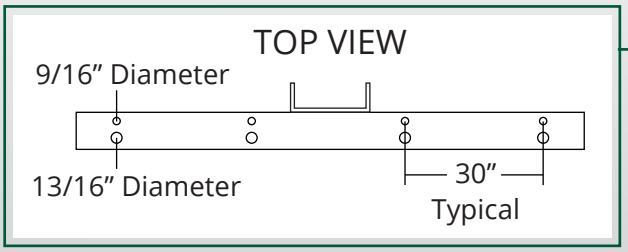

STEEL

Catalog Number	WT./LBS
UM-S-ACR-BTP-4-180-FP	89
UM-S-ACR-BTP-4-180-GV	96

FIVE LIGHT CROSSARM BRACKET WITH STANDOFF

- Mounting hardware not included
- Minimum pole diameter for mounting is 4”

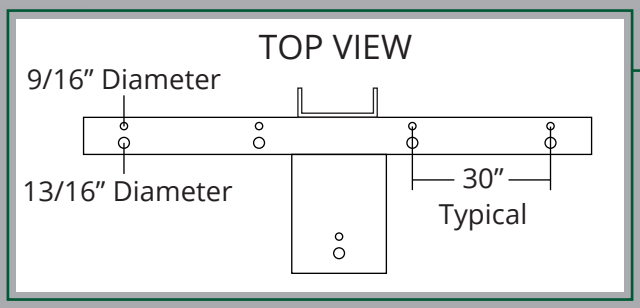

STEEL

FINISH: HOT DIP GALVANIZED

Catalog Number	WT./LBS
UM-S-ACRU-BTP-5-180-GV	142

206 W. McWilliams St.
Fond du Lac, WI 54935

888-791-1463
quotes@lightpolesplus.com
LightPolesPlus.com

MADE IN

lightpolesPLUS.com

LIGHTING BRACKETS

- Two to six lights
- Mounting hardware included
- Indicate pole size when ordering

FOR SQUARE POLES

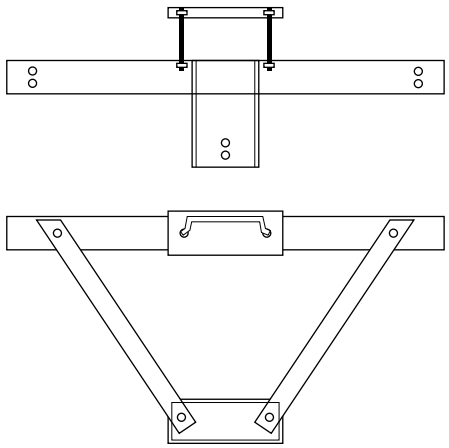

FOR ROUND POLES

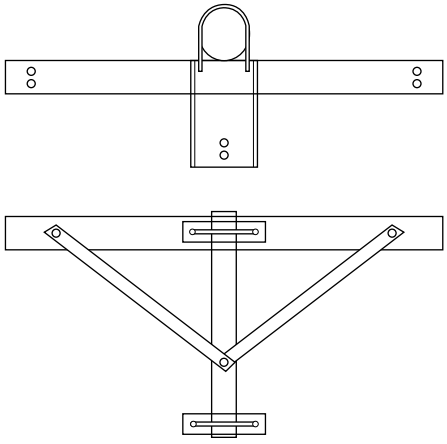

206 W. McWilliams St.
Fond du Lac, WI 54935

888-791-1463
quotes@lightpolesplus.com
LightPolesPlus.com

MADE IN

lightpolesPLUS.com

Supplied Project Documents

LightPolesPlus.com
888-791-1463
quotes@lightpolesplus.com

206 West McWilliams Street
Fond du Lac, WI 54935

Wayne Eddows Field Lighting Project

25 Priscilla Lane, Auburn, New Hampshire

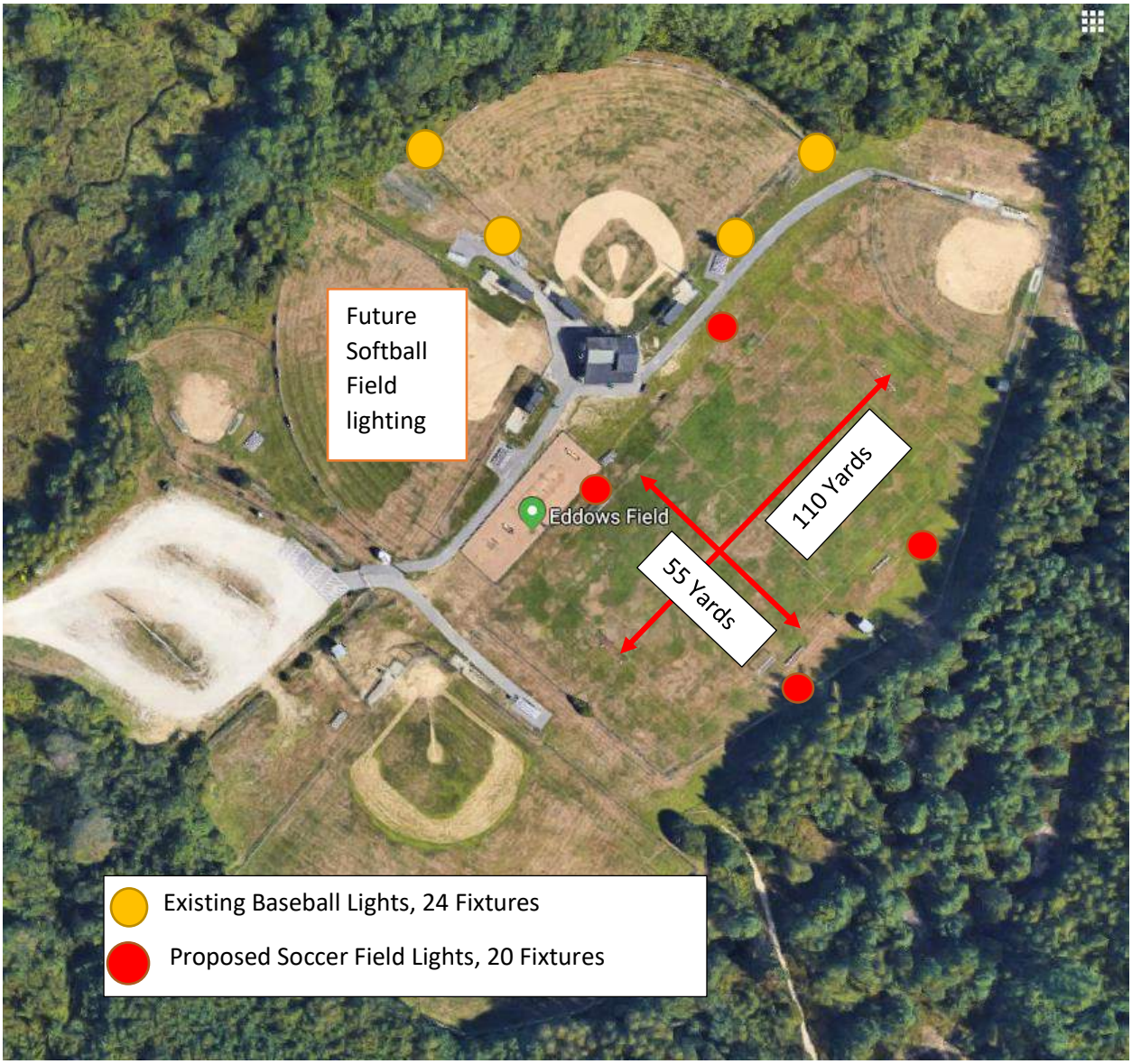

Existing Baseball field poles are 40'-50' wood poles. Looking to retrofit the 24 fixtures to free up power on the 220V 200 amp service for the soccer field, and potentially the softball field as well.

Photometric Lighting Layouts

LightPolesPlus.com
888-791-1463
quotes@lightpolesplus.com

206 West McWilliams Street
Fond du Lac, WI 54935

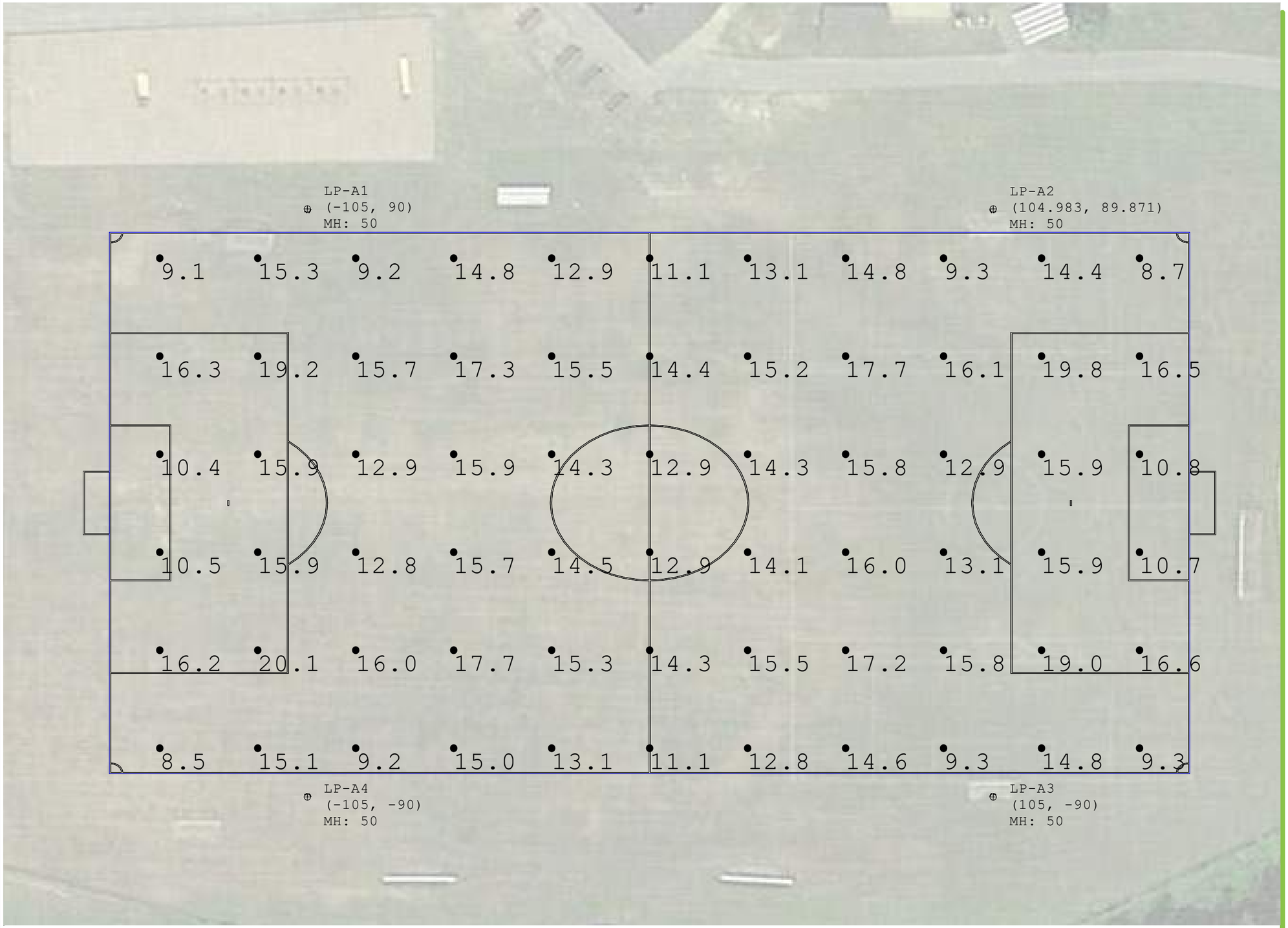

Scale: 1 inch= 30 Ft.

Auburn Soccer Club

Soccer Field

Drawn By: CO
Checked By:
Scale:
Date:4/16/2019
Notes:

*Luminaire testing data is based on Illuminating Engineering Society (IES) standards under simulated and laboratory conditions. This design is based on information supplied by others, and individual field measurements may vary from computer-simulated calculations due to variables like (but not limited to) variation in electrical voltage, environmental conditions and other variable field characteristics. Typical field foot candle measurements may vary +/- 10%. For sports lighting, field measurements should be taken in accordance with IESNA RP-6-15. Conformance to facility and local codes is the responsibility of the owner and their representatives. This layout may not meet CA Title 24 and/or other local energy codes. If specific compliance is required, those details must be provided to your factory design representative.

**Satisfactory performance and safe use of LED sports lighting fixtures is dependent upon light poles, brackets, anchorage and other structural components being of adequate design and condition. The total combined Effective Projected Area (EPA) and weight of all fixtures, brackets and attachments mounting to a light pole cannot exceed the EPA and weight rating for a specified pole. For sports lighting retrofit applications, it is the customer's responsibility to have a qualified inspector and/or engineer confirm the structural adequacy of the existing light poles assemblies. We are happy to quote new light poles and brackets if you have concerns about your existing materials.

lightpolesPLUS.com
206 W. McWilliams St.
Suite 101
Fond du Lac, WI 54935
888-791-1463
quotes@lightpolesplus.com
LightPolesPlus.com

Assembly Schedule

Qty	PoleLabel	PoleDescription	TotalWatts	TotalLumens
1	LP-A1	50' Pole, 5 Total Fixtures	2200	343665
1	LP-A2	50' Pole, 5 Total Fixtures	2200	343665
1	LP-A3	50' Pole, 5 Total Fixtures	2200	343665
1	LP-A4	50' Pole, 5 Total Fixtures	2200	343665

Assembly Location Summary

PoleLabel	X	Y	Z
LP-A1	-105	90	50
LP-A2	104.983	89.871	50
LP-A3	105	-90	50
LP-A4	-105	-90	50

Calculation Summary

CalcLabel	Units	# Pts	Avg	Max	Min	Avg/Min	Max/Min	CV
Soccer Field	Fc	66	14.20	20.1	8.5	1.67	2.36	N.A.

Auburn Soccer Club

Soccer Field

Drawn By: CO
Checked By:
Scale:
Date:4/16/2019
Notes:

*Luminaire testing data is based on Illuminating Engineering Society (IES) standards under simulated and laboratory conditions. This design is based on information supplied by others, and individual field measurements may vary from computer-simulated calculations due to variables like (but not limited to) variation in electrical voltage, environmental conditions and other variable field characteristics. Typical field foot candle measurements may vary +/- 10%. For sports lighting, field measurements should be taken in accordance with IESNA RP-6-15. Conformance to facility and local codes is the responsibility of the owner and their representatives. This layout may not meet CA Title 24 and/or other local energy codes. If specific compliance is required, those details must be provided to your factory design representative.

**Satisfactory performance and safe use of LED sports lighting fixtures is dependent upon light poles, brackets, anchorage and other structural components being of adequate design and condition. The total combined Effective Projected Area (EPA) and weight of all fixtures, brackets and attachments mounting to a light pole cannot exceed the EPA and weight rating for a specified pole. For sports lighting retrofit applications, it is the customer's responsibility to have a qualified inspector and/or engineer confirm the structural adequacy of the existing light poles assemblies. We are happy to quote new light poles and brackets if you have concerns about your existing materials.

lightpolesPLUS.com
206 W. McWilliams St.
Suite 101
Fond du Lac, WI 54935
888-791-1463
quotes@lightpolesplus.com
LightPolesPlus.com

LP-A1 Luminaire Summary

PoleLabel	FixtureLabel	MountingHeight
LP-A1	NF-20-SPZC-440-57-MV-CD-GSSPZ	50
LP-A1	NF-20-SPZC-440-57-MV-CD-GSSPZ	50
LP-A1	NF-20-SPZC-440-57-MV-CD-GSSPZ	50
LP-A1	NF-20-SPZC-440-57-MV-CD-GSSPZ	50
LP-A1	NF-20-SPZC-440-57-MV-CD-GSSPZ	50

Total Quantity: 20 (5 shown, 1 through 5)

LP-A2 Location Summary

PoleLabel	FixtureLabel	MountingHeight
LP-A2	NF-20-SPZC-440-57-MV-CD-GSSPZ	50
LP-A2	NF-20-SPZC-440-57-MV-CD-GSSPZ	50
LP-A2	NF-20-SPZC-440-57-MV-CD-GSSPZ	50
LP-A2	NF-20-SPZC-440-57-MV-CD-GSSPZ	50
LP-A2	NF-20-SPZC-440-57-MV-CD-GSSPZ	50

Total Quantity: 20 (5 shown, 6 through 10)

LP-A3 Location Summary

PoleLabel	FixtureLabel	MountingHeight
LP-A3	NF-20-SPZC-440-57-MV-CD-GSSPZ	50
LP-A3	NF-20-SPZC-440-57-MV-CD-GSSPZ	50
LP-A3	NF-20-SPZC-440-57-MV-CD-GSSPZ	50
LP-A3	NF-20-SPZC-440-57-MV-CD-GSSPZ	50
LP-A3	NF-20-SPZC-440-57-MV-CD-GSSPZ	50

Total Quantity: 20 (5 shown, 11 through 15)

LP-A4 Location Summary

PoleLabel	FixtureLabel	MountingHeight
LP-A4	NF-20-SPZC-440-57-MV-CD-GSSPZ	50
LP-A4	NF-20-SPZC-440-57-MV-CD-GSSPZ	50
LP-A4	NF-20-SPZC-440-57-MV-CD-GSSPZ	50
LP-A4	NF-20-SPZC-440-57-MV-CD-GSSPZ	50
LP-A4	NF-20-SPZC-440-57-MV-CD-GSSPZ	50

Total Quantity: 20 (5 shown, 16 through 20)

Auburn Soccer Club

Soccer Field

Drawn By: CO
Checked By:
Scale:
Date:4/16/2019
Notes:

*Luminaire testing data is based on Illuminating Engineering Society (IES) standards under simulated and laboratory conditions. This design is based on information supplied by others, and individual field measurements may vary from computer-simulated calculations due to variables like (but not limited to) variation in electrical voltage, environmental conditions and other variable field characteristics. Typical field foot candle measurements may vary +/- 10%. For sports lighting, field measurements should be taken in accordance with IESNA RP-6-15. Conformance to facility and local codes is the responsibility of the owner and their representatives. This layout may not meet CA Title 24 and/or other local energy codes. If specific compliance is required, those details must be provided to your factory design representative.

**Satisfactory performance and safe use of LED sports lighting fixtures is dependent upon light poles, brackets, anchorage and other structural components being of adequate design and condition. The total combined Effective Projected Area (EPA) and weight of all fixtures, brackets and attachments mounting to a light pole cannot exceed the EPA and weight rating for a specified pole. For sports lighting retrofit applications, it is the customer's responsibility to have a qualified inspector and/or engineer confirm the structural adequacy of the existing light poles assemblies. We are happy to quote new light poles and brackets if you have concerns about your existing materials.

lightpolesPLUS.com
206 W. McWilliams St.
Suite 101
Fond du Lac, WI 54935
888-791-1463
quotes@lightpolesplus.com
LightPolesPlus.com

Auburn Soccer Club

Soccer Field

Drawn By: CO
Checked By:
Scale:
Date:4/16/2019
Notes:

*Luminaire testing data is based on Illuminating Engineering Society (IES) standards under simulated and laboratory conditions. This design is based on information supplied by others, and individual field measurements may vary from computer-simulated calculations due to variables like (but not limited to) variation in electrical voltage, environmental conditions and other variable field characteristics. Typical field foot candle measurements may vary +/- 10%. For sports lighting, field measurements should be taken in accordance with IESNA RP-6-15. Conformance to facility and local codes is the responsibility of the owner and their representatives. This layout may not meet CA Title 24 and/or other local energy codes. If specific compliance is required, those details must be provided to your factory design representative.

**Satisfactory performance and safe use of LED sports lighting fixtures is dependent upon light poles, brackets, anchorage and other structural components being of adequate design and condition. The total combined Effective Projected Area (EPA) and weight of all fixtures, brackets and attachments mounting to a light pole cannot exceed the EPA and weight rating for a specified pole. For sports lighting retrofit applications, it is the customer's responsibility to have a qualified inspector and/or engineer confirm the structural adequacy of the existing light poles assemblies. We are happy to quote new light poles and brackets if you have concerns about your existing materials.

lightpolesPLUS.com
206 W. McWilliams St.
Suite 101
Fond du Lac, WI 54935
888-791-1463
quotes@lightpolesplus.com
LightPolesPlus.com

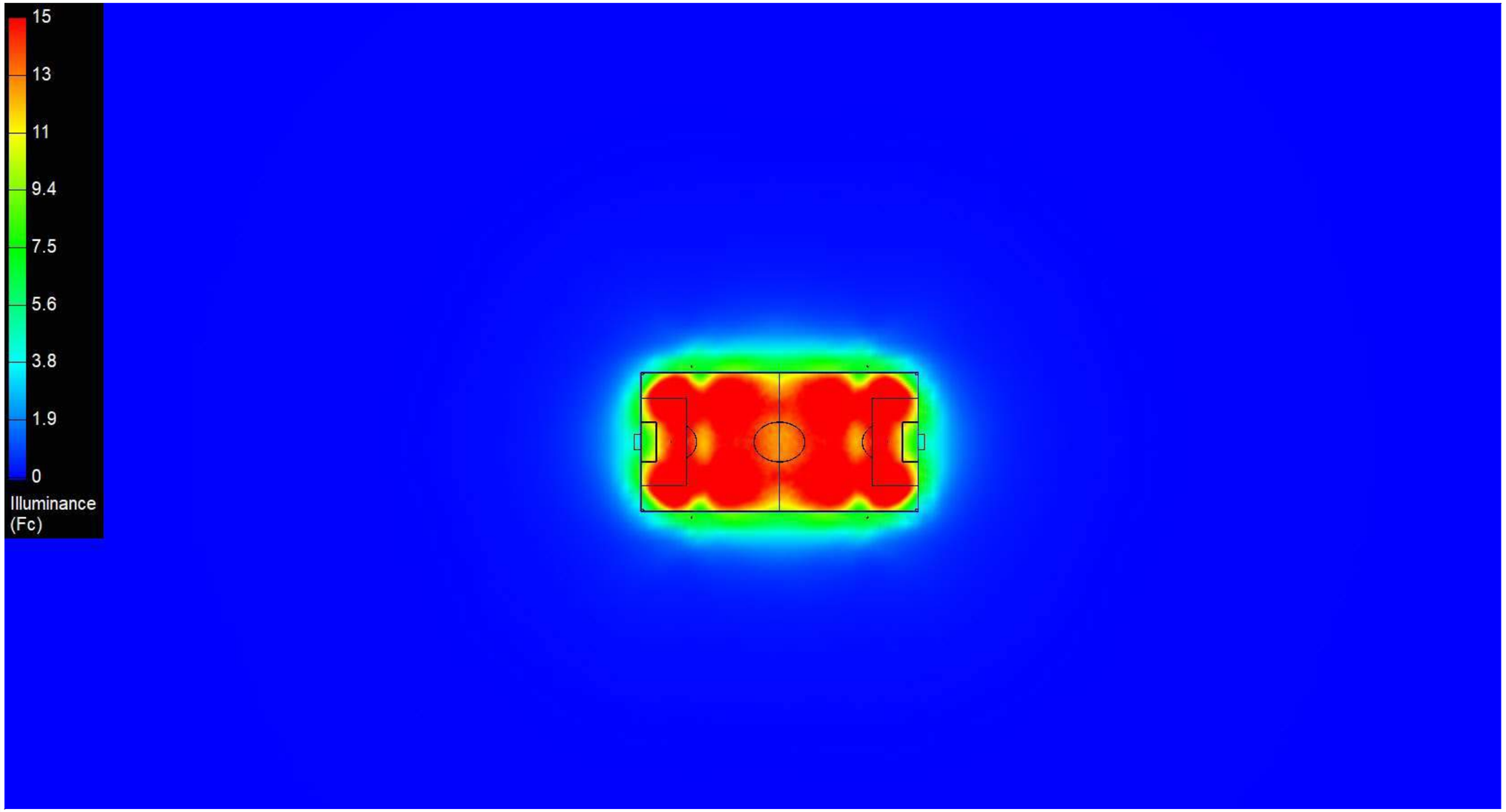

Auburn Soccer Club

Soccer Field

Drawn By: CO
Checked By:
Scale:
Date:4/16/2019
Notes:

*Luminaire testing data is based on Illuminating Engineering Society (IES) standards under simulated and laboratory conditions. This design is based on information supplied by others, and individual field measurements may vary from computer-simulated calculations due to variables like (but not limited to) variation in electrical voltage, environmental conditions and other variable field characteristics. Typical field foot candle measurements may vary +/- 10%. For sports lighting, field measurements should be taken in accordance with IESNA RP-6-15. Conformance to facility and local codes is the responsibility of the owner and their representatives. This layout may not meet CA Title 24 and/or other local energy codes. If specific compliance is required, those details must be provided to your factory design representative.

**Satisfactory performance and safe use of LED sports lighting fixtures is dependent upon light poles, brackets, anchorage and other structural components being of adequate design and condition. The total combined Effective Projected Area (EPA) and weight of all fixtures, brackets and attachments mounting to a light pole cannot exceed the EPA and weight rating for a specified pole. For sports lighting retrofit applications, it is the customer's responsibility to have a qualified inspector and/or engineer confirm the structural adequacy of the existing light poles assemblies. We are happy to quote new light poles and brackets if you have concerns about your existing materials.

lightpolesPLUS.com
206 W. McWilliams St.
Suite 101
Fond du Lac, WI 54935
888-791-1463
quotes@lightpolesplus.com
LightPolesPlus.com

Scale: 1 inch= 30 Ft.

Auburn Soccer Club

Baseball Field

Drawn By: CO
Checked By:
Scale:
Date:4/16/2019
Notes:

*Luminaire testing data is based on Illuminating Engineering Society (IES) standards under simulated and laboratory conditions. This design is based on information supplied by others, and individual field measurements may vary from computer-simulated calculations due to variables like (but not limited to) variation in electrical voltage, environmental conditions and other variable field characteristics. Typical field foot candle measurements may vary +/- 10%. For sports lighting, field measurements should be taken in accordance with IESNA RP-6-15. Conformance to facility and local codes is the responsibility of the owner and their representatives. This layout may not meet CA Title 24 and/or other local energy codes. If specific compliance is required, those details must be provided to your factory design representative.

**Satisfactory performance and safe use of LED sports lighting fixtures is dependent upon light poles, brackets, anchorage and other structural components being of adequate design and condition. The total combined Effective Projected Area (EPA) and weight of all fixtures, brackets and attachments mounting to a light pole cannot exceed the EPA and weight rating for a specified pole. For sports lighting retrofit applications, it is the customer's responsibility to have a qualified inspector and/or engineer confirm the structural adequacy of the existing light poles assemblies. We are happy to quote new light poles and brackets if you have concerns about your existing materials.

lightpolesPLUS.com
206 W. McWilliams St.
Suite 101
Fond du Lac, WI 54935
888-791-1463
quotes@lightpolesplus.com
LightPolesPlus.com

Assembly Schedule

Qty	PoleLabel	PoleDescription	TotalWatts	TotalLumens
1	LP-A1	50' Pole, 6 Total Fixtures	2640	392281
1	LP-A2	50' Pole, 6 Total Fixtures	2640	392281
1	LP-B1	50' Pole, 6 Total Fixtures	2640	331930
1	LP-B2	50' Pole, 6 Total Fixtures	2640	331930

Assembly Location Summary

PoleLabel	X	Y	Z
LP-A1	-27	57	50
LP-A2	57	-27	50
LP-B1	-23	194	50
LP-B2	204	-22	50

Calculation Summary

CalcLabel	Units	# Pts	Avg	Max	Min	Avg/Min	Max/Min	CV
Baseball Field	Fc	98	22.99	39.7	9.8	2.35	4.05	N.A.
Infield	Fc	24	30.30	39.7	19.7	1.54	2.02	N.A.
Outfield	Fc	75	20.61	28.3	9.8	2.10	2.89	N.A.

Auburn Soccer Club

Baseball Field

Drawn By: CO
Checked By:
Scale:
Date:4/16/2019
Notes:

*Luminaire testing data is based on Illuminating Engineering Society (IES) standards under simulated and laboratory conditions. This design is based on information supplied by others, and individual field measurements may vary from computer-simulated calculations due to variables like (but not limited to) variation in electrical voltage, environmental conditions and other variable field characteristics. Typical field foot candle measurements may vary +/- 10%. For sports lighting, field measurements should be taken in accordance with IESNA RP-6-15. Conformance to facility and local codes is the responsibility of the owner and their representatives. This layout may not meet CA Title 24 and/or other local energy codes. If specific compliance is required, those details must be provided to your factory design representative.

**Satisfactory performance and safe use of LED sports lighting fixtures is dependent upon light poles, brackets, anchorage and other structural components being of adequate design and condition. The total combined Effective Projected Area (EPA) and weight of all fixtures, brackets and attachments mounting to a light pole cannot exceed the EPA and weight rating for a specified pole. For sports lighting retrofit applications, it is the customer's responsibility to have a qualified inspector and/or engineer confirm the structural adequacy of the existing light poles assemblies. We are happy to quote new light poles and brackets if you have concerns about your existing materials.

lightpolesPLUS.com
206 W. McWilliams St.
Suite 101
Fond du Lac, WI 54935
888-791-1463
quotes@lightpolesplus.com
LightPolesPlus.com

LP-A1 Luminaire Summary

PoleLabel	FixtureLabel	MountingHeight
LP-A1	NF-20-SPZC-440-57-MV-CD-GSSPZ	50
LP-A1	NF-20-SPZC-440-57-MV-5N-GSSPZ	50
LP-A1	NF-20-SPZC-440-57-MV-CD-GSSPZ	50
LP-A1	NF-20-SPZC-440-57-MV-CD-GSSPZ	50
LP-A1	NF-20-SPZC-440-57-MV-CD-GSSPZ	50
LP-A1	NF-20-SPZC-440-57-MV-CD-GSSPZ	50

Total Quantity: 24 (6 shown, 1 through 6)

LP-A2 Location Summary

PoleLabel	FixtureLabel	MountingHeight
LP-A2	NF-20-SPZC-440-57-MV-CD-GSSPZ	50
LP-A2	NF-20-SPZC-440-57-MV-5N-GSSPZ	50
LP-A2	NF-20-SPZC-440-57-MV-CD-GSSPZ	50
LP-A2	NF-20-SPZC-440-57-MV-CD-GSSPZ	50
LP-A2	NF-20-SPZC-440-57-MV-CD-GSSPZ	50
LP-A2	NF-20-SPZC-440-57-MV-CD-GSSPZ	50

Total Quantity: 24 (6 shown, 7 through 12)

LP-B1 Location Summary

PoleLabel	FixtureLabel	MountingHeight
LP-B1	NF-20-SPZC-440-57-MV-5N-GSSPZ	50
LP-B1	NF-20-SPZC-440-57-MV-5N-GSSPZ	50
LP-B1	NF-20-SPZC-440-57-MV-CD-GSSPZ	50
LP-B1	NF-20-SPZC-440-57-MV-CD-GSSPZ	50
LP-B1	NF-20-SPZC-440-57-MV-5N-GSSPZ	50
LP-B1	NF-20-SPZC-440-57-MV-5N-GSSPZ	50

Total Quantity: 24 (6 shown, 13 through 18)

LP-B2 Location Summary

PoleLabel	FixtureLabel	MountingHeight
LP-B2	NF-20-SPZC-440-57-MV-5N-GSSPZ	50
LP-B2	NF-20-SPZC-440-57-MV-5N-GSSPZ	50
LP-B2	NF-20-SPZC-440-57-MV-CD-GSSPZ	50
LP-B2	NF-20-SPZC-440-57-MV-CD-GSSPZ	50
LP-B2	NF-20-SPZC-440-57-MV-5N-GSSPZ	50
LP-B2	NF-20-SPZC-440-57-MV-5N-GSSPZ	50

Total Quantity: 24 (6 shown, 19 through 24)

Auburn Soccer Club

Baseball Field

Drawn By: CO
Checked By:
Scale:
Date:4/16/2019
Notes:

*Luminaire testing data is based on Illuminating Engineering Society (IES) standards under simulated and laboratory conditions. This design is based on information supplied by others, and individual field measurements may vary from computer-simulated calculations due to variables like (but not limited to) variation in electrical voltage, environmental conditions and other variable field characteristics. Typical field foot candle measurements may vary +/- 10%. For sports lighting, field measurements should be taken in accordance with IESNA RP-6-15. Conformance to facility and local codes is the responsibility of the owner and their representatives. This layout may not meet CA Title 24 and/or other local energy codes. If specific compliance is required, those details must be provided to your factory design representative.

**Satisfactory performance and safe use of LED sports lighting fixtures is dependent upon light poles, brackets, anchorage and other structural components being of adequate design and condition. The total combined Effective Projected Area (EPA) and weight of all fixtures, brackets and attachments mounting to a light pole cannot exceed the EPA and weight rating for a specified pole. For sports lighting retrofit applications, it is the customer's responsibility to have a qualified inspector and/or engineer confirm the structural adequacy of the existing light poles assemblies. We are happy to quote new light poles and brackets if you have concerns about your existing materials.

lightpolesPLUS.com
206 W. McWilliams St.
Suite 101
Fond du Lac, WI 54935
888-791-1463
quotes@lightpolesplus.com
LightPolesPlus.com

Auburn Soccer Club

Baseball Field

Drawn By: CO
Checked By:
Scale:
Date:4/16/2019
Notes:

*Luminaire testing data is based on Illuminating Engineering Society (IES) standards under simulated and laboratory conditions. This design is based on information supplied by others, and individual field measurements may vary from computer-simulated calculations due to variables like (but not limited to) variation in electrical voltage, environmental conditions and other variable field characteristics. Typical field foot candle measurements may vary +/- 10%. For sports lighting, field measurements should be taken in accordance with IESNA RP-6-15. Conformance to facility and local codes is the responsibility of the owner and their representatives. This layout may not meet CA Title 24 and/or other local energy codes. If specific compliance is required, those details must be provided to your factory design representative.

**Satisfactory performance and safe use of LED sports lighting fixtures is dependent upon light poles, brackets, anchorage and other structural components being of adequate design and condition. The total combined Effective Projected Area (EPA) and weight of all fixtures, brackets and attachments mounting to a light pole cannot exceed the EPA and weight rating for a specified pole. For sports lighting retrofit applications, it is the customer's responsibility to have a qualified inspector and/or engineer confirm the structural adequacy of the existing light poles assemblies. We are happy to quote new light poles and brackets if you have concerns about your existing materials.

lightpolesPLUS.com
206 W. McWilliams St.
Suite 101
Fond du Lac, WI 54935
888-791-1463
quotes@lightpolesplus.com
LightPolesPlus.com

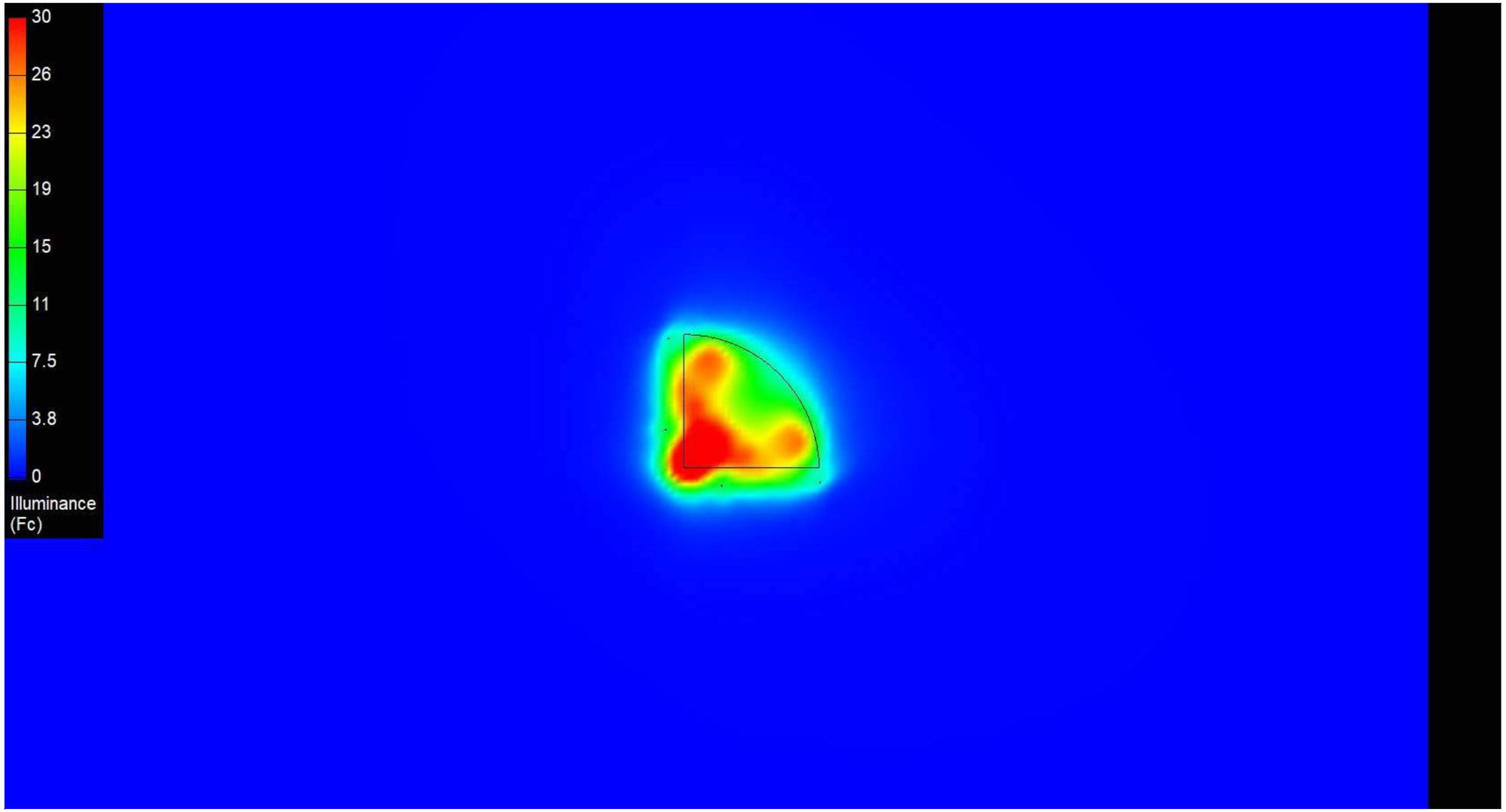

Auburn Soccer Club

Baseball Field

Drawn By: CO
Checked By:
Scale:
Date:4/16/2019
Notes:

*Luminaire testing data is based on Illuminating Engineering Society (IES) standards under simulated and laboratory conditions. This design is based on information supplied by others, and individual field measurements may vary from computer-simulated calculations due to variables like (but not limited to) variation in electrical voltage, environmental conditions and other variable field characteristics. Typical field foot candle measurements may vary +/- 10%. For sports lighting, field measurements should be taken in accordance with IESNA RP-6-15. Conformance to facility and local codes is the responsibility of the owner and their representatives. This layout may not meet CA Title 24 and/or other local energy codes. If specific compliance is required, those details must be provided to your factory design representative.

**Satisfactory performance and safe use of LED sports lighting fixtures is dependent upon light poles, brackets, anchorage and other structural components being of adequate design and condition. The total combined Effective Projected Area (EPA) and weight of all fixtures, brackets and attachments mounting to a light pole cannot exceed the EPA and weight rating for a specified pole. For sports lighting retrofit applications, it is the customer's responsibility to have a qualified inspector and/or engineer confirm the structural adequacy of the existing light poles assemblies. We are happy to quote new light poles and brackets if you have concerns about your existing materials.

lightpolesPLUS.com
206 W. McWilliams St.
Suite 101
Fond du Lac, WI 54935
888-791-1463
quotes@lightpolesplus.com
LightPolesPlus.com

Additional Information

LightPolesPlus.com
888-791-1463
quotes@lightpolesplus.com

206 West McWilliams Street
Fond du Lac, WI 54935

Baseball Field Restorations

- 350w Heritage LED Sports Lighters
- Utilized Existing 30-40ft Wood Poles & Cross Arms
- Dramatically Improved Lighting Performance Over 1000w HID Metal Halide
- 70% Energy Savings & Drastic Maintenance Reduction

Top 6 Reasons To Ditch HID Sports Lighting & Go LED!

The LED lighting revolution has been active in the United States and Europe for nearly a decade. Adoption is just getting started with LED sports lighting applications.

Millions of athletes, field owners and team patrons don't realize what they're missing. Fields with HID lighting often produce significantly less than their original delivered foot candles. With LED technology, we deliver maximum foot candles back to where they need to be and keep them there for years of play.

Everything has a design life, and there's a good chance your existing HID fixtures are simply timed out. Signs of worn out HID fixtures:

- Yellowed lenses
- Cracked seals
- Failing ballasts
- Weathered wire coating

HID lamps and ballasts experience severe degradation over time. Their original anodized reflector, that's critical to performance, has likely oxidized and become inefficient. An oxidized reflector can change the spot beam patterns to useless wide patterns. Dirt and debris that gets embedded on lenses reduces light output also plays a factor in reducing light output.

Our LED sports lighting products use medical grade silicone optics. These optics don't yellow or crack like other materials. Our fixtures also take advantage of the latest LED technology by using the best LED chips available.

1. Improved light levels, uniformity and color rendering.

2. Minimal foot candle drop over decades of use.

3. Major maintenance and energy savings.

4. Instant on and off.

5. Maximum light control and reduced spill light.

6. Many factories have stopped producing replacement HID ballasts and lamps.

(888) 791-1463 | quotes@lightpolesplus.com
206 West McWilliams Street
Fond du Lac, WI 54935

Quotation

LightPolesPlus.com
888-791-1463
quotes@lightpolesplus.com

206 West McWilliams Street
Fond du Lac, WI 54935

QUOTATION

Quote #: 932987

Date Created: 4/16/19

Exp. Date: 5/15/19

206 W. McWilliams St, Suite 101
Fond du Lac, WI 54935
US

Contact Information

Prepared By:	Justin Jansen	Contact Name:	Patrick Kelly
Phone #:	(888) 791-1463 x706	Phone #:	6032894041
E-Mail:	team2@lightpolesplus.com	Email:	kellysoccernh@gmail.com
Fax:	414-255-2293	Fax:	

Address Information

Bill To Name:	Auburn Soccer Club (1418226)	Ship To Name:	
Bill To:		Ship To:	NH 03032

Standard Products

Qty	Product	Sale Price	Ext. Price
44	**[PART#]** NF-LED-NF-20-SPZC-440-57-MV-5N-WHP11NP-STUD **[DESCRIPTION]** Custom LED Light Fixture **[COMMENTS]** 440 Watt, 20" High-Output LED Sports & Flood Light Fixture, 120-277v Input VAC, 5700k Cool White, 68484 Nominal Lumens, 1000-1500w HID Replace, Type 5 Narrow Distribution, USA Made, ETL Certified to UL 1598 and CSA Standards, 300,000+ Hours L70 LED life.	$1,274.00	$56,056.00
4	**[PART#]** UM-S-ACRU-BTP-5-180-GV **[DESCRIPTION]** 5 @ 180 deg. Fixture Mount, Steel Cross Arm w/ Standoff Bracket, Sports Lighting Mount, Hot-Dip Galvanized Finish, USA Engineered & Manufactured **[COMMENTS]** (mounting hardware not included) soccer	$839.00	$3,356.00
4	**[PART#]** UM-S-ACR-BTP-4-180-GV **[DESCRIPTION]** 4 @ 180 deg. Fixture Mount, Steel Cross Arm Bracket, Sports Lighting Mount, Hot-Dip Galvanized Finish, USA Engineered & Manufactured **[COMMENTS]** (mounting hardware not included) baseball top row	$525.00	$2,100.00
4	**[PART#]** UM-S-ACR-BTP-2-180-GV **[DESCRIPTION]** 2 @ 180 deg. Fixture Mount, Steel Cross Arm Bracket, Sports Lighting Mount, Hot-Dip Galvanized Finish, USA Engineered & Manufactured **[COMMENTS]** (mounting hardware not included) baseball bottom row	$140.00	$560.00

1. Pricing is based on a prepaid order release within 60 days and includes delivery within the contiguous USA unless otherwise noted.
2. Sales tax calculation (if applicable) will be finalized at order processing (OE).
3. Please consult your Technical Sales Manager for additional order terms and details.

Grand Total: $62,072.00

Important Notes:

Wayne Eddows Field Lighting Project

- Light Poles & Brackets: 6-8 weeks estimated production lead time.
- Mounting hardware for brackets NOT included.
- LED Fixtures: 6-8 weeks estimated production lead time.
- 220v confirmed onsite
- Loading Assumption: mounting quantity [2/4/5, light fixtures]; [1, brackets]; [0, cameras] per pole.
- Lightning strikes and voltage surges can cause LED fixture damage; additional surge protection available upon request.
- Non-Standard specifications may add to the production lead time.
- Customer responsible for unloading at time of delivery; line items may ship at different times during production cycle.
- Recommended system provisions by others include voltage regulator, power conditioner, surge & fuse protection at pole base and panel.
- Standard prepayment required to release order.

Soccer field using 5 x 440w per pole
Baseball field using 6 x 440w per pole (rack of 4 + 2)

IMPORTANT: Do you require vibration dampeners? We recommend vibration dampeners be used when (1) light poles are being installed on a

parking ramp, deck, bridge, pier, airport, train or subway hub/terminal or known problem area (2) a load of 0.75 EPA or smaller is going on the light poles and (3) light poles are being used as camera supports and/or will have non-standard appendages attached to them.

IMPORTANT: To ensure proper selection of the light pole, luminaire, accessories and/or foundation, we recommend the customer consult a qualified engineer to analyze the loading and design criteria for the specific application. Maximum loading capacity guidance is based on side-mounted light fixtures only.

IMPORTANT: LPP and its vendors are not responsible for the structural adequacy of new and/or existing light pole footing designs and anchor bolts. Estimated loading capacity values and wind zone ratings are based on standard commercial design and engineering criteria, and they do not account for additional loadings from objects such as (but not limited to) signs, banners, cameras, solar panels and flags. Our light pole warranty does not cover vibration induced fatigue failure.

IMPORTANT: LPP and its vendors consider these quoted products as produced and supplied according to the customer's dimensional, material and/or electrical specifications. Given the customer has not provided specific loading information, we have not engineered the products for the customer's specific application(s). The customer remains responsible for the product design, engineering and selection.

P: 888-791-1463
team2@lightpolesplus.com

206 W. McWilliams St | Suite 101
Fond du Lac, WI 54935

MADE IN USA

Signature

PLEASE SIGN & DATE TO APPROVE THIS PROPOSAL

NAME:_____

DATE_____

QUOTATION

Quote #: 942199

Date Created: 5/10/19

Exp. Date: 6/24/19

308 N. Brooke St.
Fond du Lac, WI 54935
US

Contact Information

Prepared By:	Justin Jansen	Contact Name:	Patrick Kelly
Phone #:	(888) 791-1463 x706	Phone #:	6032894041
E-Mail:	team2@lightpolesplus.com	Email:	kellysoccernh@gmail.com
Fax:	414-255-2293	Fax:	

Address Information

Bill To Name:	Auburn Soccer Club (1418226)	Ship To Name:	TBD
Bill To:		Ship To:	

Standard Products

Qty	Product	Sale Price	Ext. Price
8	**[PART#]** UM-S-BLH-BTP-1-000-GV-18 **[DESCRIPTION]** Single Fixture Mount, 18" Long, Steel Flood Light Bracket, Wood Pole Mount, Hot-Dip Galvanized Finish, USA Engineered & Manufactured **[COMMENTS]** (MOUNTING HARDWARE NOT INCLUDED)	$99.00	$792.00
8	**[PART#]** NF-16-SBHC-160-50-MV-5 **[DESCRIPTION]** 160 Watt, 16" LED Shoebox Area & Flood Light Fixture, 120-277v Input VAC, 5000k Cool White, 21735 Nominal Lumens, 300-525w HID Replace, Type 5 Distribution, USA Made, ETL Certified to UL 1598 and CSA Standards, 300,000+ Hours L70 LED Life, 5-Year Standard Limited Warranty	$545.00	$4,360.00
8	**[PART#]** NF-SF **[DESCRIPTION]** Adjustable Slipfitter Mount for 12" & 16" Shoebox Fixtures, Fits 2.38" OD Tenon & Arm Mounts, Dark Bronze Powder Coat Standard, Finished to Match Fixture Color for Custom Colors, Heavy Duty Die Cast Aluminum Material	$40.00	$320.00

1. Pricing is based on a prepaid order release within 60 days and includes delivery within the contiguous USA unless otherwise noted.
2. Sales tax calculation (if applicable) will be finalized at order processing (OE).
3. Please consult your Technical Sales Manager for additional order terms and details.

Grand Total: $5,472.00

Important Notes:

WOOD UTILITY POLES BEING USED

- Light Poles & Brackets: 2-4 weeks estimated production lead time.
- LED Fixtures: 2-4 weeks estimated production lead time.
- CONFIRM VOLTAGE
- Mounting hardware not included.
- Loading Assumption: mounting quantity [X, light fixtures]; [Y, brackets]; [Z, cameras] per pole.
- Lightning strikes and voltage surges can cause LED fixture damage; additional surge protection available upon request.
- Non-Standard specifications may add to the production lead time.
- Customer responsible for unloading at time of delivery; line items may ship at different times during production cycle.
- Commercial shipping location with receiving dock can be provided to void limited access delivery charges.

IMPORTANT: Do you require vibration dampeners? We recommend vibration dampeners be used when (1) light poles are being installed on a parking ramp, deck, bridge, pier, airport, train or subway hub/terminal or known problem area (2) a load of 0.75 EPA or smaller is going on the light poles and (3) light poles are being used as camera supports and/or will have non-standard appendages attached to them.

IMPORTANT: To ensure proper selection of the light pole, luminaire, accessories and/or foundation, we recommend the customer consult a qualified engineer to analyze the loading and design criteria for the specific application. Maximum loading capacity guidance is based on side-mounted light fixtures only.

IMPORTANT: LPP and its vendors are not responsible for the structural adequacy of new and/or existing light pole footing designs and anchor bolts. Estimated loading capacity values and wind zone ratings are based on standard commercial design and engineering criteria, and they do not account for additional loadings from objects such as (but not limited to) signs, banners, cameras, solar panels and flags. Our light pole warranty does not cover vibration induced fatigue failure.

IMPORTANT: LPP and its vendors consider these quoted products as produced and supplied according to the customer's dimensional, material and/or electrical specifications. Given the customer has not provided specific loading information, we have not engineered the products for the customer's specific application(s). The customer remains responsible for the product design, engineering and selection.

P: 888-791-1463
team2@lightpolesplus.com

308 N. Brooke St.
Fond du Lac, WI 54935

MADE IN USA

Town of Auburn

Town Hall
47 Chester Road
P.O. Box 309
Auburn, NH 03032

Town Administrator

William G. Herman, CPM
Phone: (603) 483-5052 Ext. 111
Fax: (603) 483-0518
E-Mail:
townadmin@townofauburnnh.com

To: Board of Selectmen

From: Bill Herman, CPM, Town Administrator
Date: May 24, 2019
Re: Replacement of Mini Split System at Griffin Public Library

During the FY 2019 budget process, the Trustees of the Library had brought forward proposals to replace current air conditioning unit at the library that had gotten beyond repair. During the budget process, the Board had indicated they would prefer to fund the replacement through the Town Building Rehabilitation Reserve Fund instead of adding it to the FY 2019 budget.

Library Director Kathryn Growney has been in contact with the low bidder, Jim Trombly Plumbing & Heating of Manchester, who indicates there has been an increase in the cost of the equipment since they first quoted in August 2018, but they would hold to the original quote for the Library.

Attached for your benefit is the original quote provided to the Library, a recent e-mail exchange reaffirming the price and RSA 35:15 outlining the Board's authority to expend from the building fund.

The Library is ready to move forward with this replacement, so we are now formally seeking the Board's direction to fund this work through the Town Buildings Reserve Fund.

Assuming you remain supportive of this effort, it would be appropriate if the Board were to formally do so with the following motion:

Move to approve the removal of an existing air conditioning system and install a new single zone two-ton multi-split system at the Griffin Free Public Library for a cost of $3,895.00. And to further authorize the withdrawal of this amount from the Town Building Rehabilitation Capital Reserve Fund for this purpose.

Thank you for your consideration.

Attachments

JIM TROMBLY

Estimate
5081
Printed 8/15/2018

257 Bridge St.
Manchester, NH
03104-5096
NH WATS

GRANITE STATE WATER SYSTEMS

Estimate submitted to:
GRIFFIN FREE PUBLIC LIBRARY
22 HOOKSETT ROAD
PO BOX 308
AUBURN, NH 03032

Home: (603) 483-5374

Estimate Location:
GRIFFIN FREE PUBLIC LIBRARY
22 HOOKSETT ROAD
PO BOX 308
AUBURN, NH 03032

Home: (603) 483-5374

REPLACEMENT OF SINGLE ZONE:
RECLAIM AND REMOVE OLD ENERGY KNIGHT SYSTEM FROM JOBSITE. FURNISH AND INSTALL NEW FUJITSU SINGLE ZONE 2-TON MINISPLIT SYSTEM

MATERIALS:
1-FUJITSU AOU24RLXFW1 2-TON R-410A CONDENSER
1-FUJITSU ASU24RLF 2-TON WALL MOUNT FANCOIL
<http://www.fujitsugeneral.com/us/resources/pdf/support/downloads/submittal-sheets/24RLXFW1.pdf>
1-LIQUID SUCTION LINESET
1-R-22 RECLAIM & DISPOSAL
1-NITROGEN CHARGE (TEST NEW SYSTEM)
1-CONDENSER PAD
1-SET CONDENSER HEAT PUMP RISERS
ALL LINEHIDE AS NEEDED
ALL 14/4 COMMUNICATION WIRE AS NEEDED

We propose hereby to furnish material and labor - complete in accordance with above specifications

dolla (**$3,895.00**)

Payment to be ma
100% UPON COMPLETION OF JOB

All material is guaranteed to be as specified. All work to be completed in a workmanlike manner according to standard practices. Any alteration or deviation

In the event that there is a Default under the terms of this agreement, the person to whom this proposal is made shall be responsible for all costs of collection, including

Autho
rized
NOTE This proposal
may be days.

Acceptance of Proposal - The above prices, specifications and conditions are

Date of Accep

Signature

Signat

Individually a

Print Name

Print

Bill Herman

From: Griffin Free <director@griffinfree.com>
Sent: Wednesday, May 22, 2019 4:41 PM
To: Bill Herman
Subject: Fwd: Jim Trombly Plumbing & Heating Inc. ESTIMATE
Attachments: Estimate Jim Trombly 2018 Griffin Free.pdf

Hi Bill,

During the 2019 Budget process, the library requested to replace the AC unit that is no longer working in the library. The lowest quote we received was from Jim Trombly in the amount of $3895 (attached). I have just emailed Dan Dandurand from Jim Trombly for an updated estimate (email below). He says that he will keep it the same.

I am checking that funding is available from the town for this project and if there are any additional steps I need to take prior to scheduling the repair.

Thank you.

Kathy

---------- Forwarded message ---------
From: **Dan Dandurand** <dand@tromblyplumbing.com>
Date: Wed, May 22, 2019 at 2:02 PM
Subject: RE: Jim Trombly Plumbing & Heating Inc. ESTIMATE
To: <director@griffinfree.org>

There has been a price increase in the equipment but I will keep the price the same for you

---

From: Griffin Free [mailto:director@griffinfree.com]
Sent: Wednesday, May 22, 2019 1:19 PM
To: Dan Dandurand
Subject: Fwd: Jim Trombly Plumbing & Heating Inc. ESTIMATE

Hello Dan,

Last August you provided the below quote for replacing one of our AC units at the Griffin Free Public Library in Auburn (Estimate #5081). Would you please update the quote and let me know if the amount has changed?

Thank you in advance.

Kathy Growney

Library Director

Griffin Free Public Library
Auburn, NH 03032
(603) 483-5374

---------- Forwarded message ---------
From: **Dan Dandurand** <dand@tromblyplumbing.com>
Date: Wed, Aug 15, 2018 at 1:12 PM
Subject: Jim Trombly Plumbing & Heating Inc. ESTIMATE
To: <Director@griffinfree.com>

Attention Kathy:

Attached please find your Estimate in PDF format.
It can be viewed using the free Adobe Acrobat Reader software,
obtainable from http://www.adobe.com/products/acrobat/

--
Kathy Growney
Library Director
Griffin Free Public Library
Auburn, NH 03032
(603) 483-5374

TITLE III
TOWNS, CITIES, VILLAGE DISTRICTS, AND UNINCORPORATED PLACES

CHAPTER 35
CAPITAL RESERVE FUNDS OF COUNTIES, TOWNS, DISTRICTS, AND WATER DEPARTMENTS

Section 35:15

35:15 Expenditures. –

I. Persons holding said capital reserve funds in trust, as provided in this chapter, shall hold the same until such time as the town, district or county shall have voted to withdraw funds from such capital reserve fund or shall have named agents of the town, district or county to carry out the objects designated by the town, district or county, in the manner prescribed by RSA 35:3.

II. Expenditures from any fund established for the acquisition of land pursuant to RSA 35:1 shall be made only as authorized:

(a) By a majority vote of the legal voters present and voting at an annual or special meeting, in the case of a town, school district or village district, or by majority vote of the county delegation, in the case of a county, or

(b) By the selectmen, appointed as agents pursuant to RSA 41:14-a, provided that the selectmen shall not have authority to expend any sum in excess of the amount contained in any capital reserve account created for the purchase of land other than any grant moneys which may be received.

III. (a) Notwithstanding the prohibition of debt retirement fund establishment in RSA 33:2, capital reserve funds may be used for multiple payments under a financing agreement for the purpose for which the capital reserve was established. If the financing agreement is a lease/purchase agreement the following shall apply:

(1) The lease/purchase agreement does not contain an "escape clause" or "non-appropriation clause"; and

(2) The lease/purchase agreement has been ratified by the legislative body by a vote by ballot of 2/3 of all the voters present and voting at an annual or special meeting.

(b) If agents have been named according to RSA 35:15, then no further vote is required to disburse funds following the initial vote which ratified the financing agreement.

IV. In the case of a water works or sewer department, as provided in RSA 35:7, the governing body, water board, or the water or sewer commissioners if any, shall determine when expenditures from said reserve shall be made.

V. In all cases, expenditures from a capital reserve fund shall be made only for or in connection with the purposes for which said fund was established or as amended as provided in RSA 35:16.

Source. 1943, 160:9. RSA 35:15. 1985, 285:3. 1991, 167:2. 1994, 95:2, eff. July 8, 1994. 1998, 43:1, eff. July 4, 1998. 2001, 187:1, eff. Sept. 3, 2001. 2007, 178:3, eff. Aug. 17, 2007.

TOWN BUILDINGS CAPITAL RESERVE FUND
(Status as of May 28, 2019)

Building Fund Balance (as of 12/31/2017)	$100,981.00
Projects Funded in 2018:	
Renovation of Town Hall Entrance	-34,260.00
Painting of Exterior of Town Hall	-18,760.00
Door Replacement - Fire Department	-2,125.00
Water Softening System - Pingree Hill Station	-5,010.00
Replacement of Lights / Safety Complex	-5,425.00
Sally Port Lights - Police Department	-900.00
Recessed Lights - Town Hall Front Entrance	-2,149.00
Repair Exterior Lights - Town Hall	-3,200.00
Total Spent of Obligated:	$71,829.00
Interest Earned (2018)	783.71
Balance:	$29,935.71
Committed for 2019:	
Heat System Repair - Saety Complex	-2,609.37
Radiant Heat System Repair - Safety Complex	-705.60
Mold Remediation - Pingree Hill Station	-865.19
Addition & Renovation Design - Police Station	-3,200.00
Air Conditioning - Griffin Library	-3,895.00
Balance:	$18,660.55
2019 Warrant Article:	60,000.00
Anticipated Balance for Remainder of 2019:	$78,660.55

Town of Auburn

Town Hall
47 Chester Road
P.O. Box 309
Auburn, NH 03032

Town Administrator

William G. Herman, CPM
Phone: (603) 483-5052 Ext. 111
Fax: (603) 483-0518
E-Mail:
townadmin@townofauburnnh.com

To: Todd Bedard

From: Bill Herman, CPM, Town Administrator
Date: May 23, 2019
Re: Community Forum / Meeting Potentials

Following our conversation earlier this month about the potential of a general community forum or meeting to allow residents an opportunity to receive information and have a conversation with Town officials outside of the regular Board of Selectmen's meetings, I put an inquiry out on the Town Managers / Town Administrators list serve for experiences other communities may have had in this area.

I received responses from a total of seven communities, both smaller and larger than Auburn, with different ideas about formats and styles they have used, and the experiences they have had as a result. The communities we have heard from include Durham, Gilford, Milford, New Durham, Sandwich, Swanzey and Weare.

Here is a quick summary of what I received from those communities:

Durham: They have held three different types of meetings with success. One is a Town Informational Meeting (hosted by the Town Council and Town department heads make about five minute presentations of current activities); Another is a Visioning type of meeting lead by a facilitator and the audience is by invitation. And a Social type of gathering hosted by a business association, but focused on Town business.

Gilford: An annual summer forum hosted by the Board of Selectmen for their seasonal residents. Held at Town Hall, each department head would give a brief presentation on priorities and challenges, followed by a Q&A session.

Milford: On months when there is a fifth Monday, the Board of Selectmen will hold a forum at Town Hall that usually has no agenda and allows residents to simply attend and talk with the Selectmen.

Sandwich: Hosts an annual "Summer Town Meeting" that is held during the Town's annual Old Home Week in August. The purpose also appears to be to allow summer residents an opportunity to engage with the Town government. The Town Moderator moderates the meeting and department heads make brief informational presentations. No votes are taken, it is more of a year-in-review type of session.

Swanzey: The Selectmen have held Saturday morning "coffee and conversation" sessions roughly monthly at various spots around town. They have stopped doing them as they experienced good attendance at the beginning to ultimately no attendance after a while.

New Durham: Offered a "Coffee with the Town" forum where they had a coffee on the first Wednesday of the month at the General Store (right in the center of Town) from 9 – 10 am. A Selectman or the Town Administrator and the department heads took their turn to individually be at the Store on the appointed date. They did not do a large gathering format.

Weare: The Board of Selectmen would hold "coffee time" quarterly at the Town Library (the facility has a community meeting room similar to the Auburn Safety Complex). It was a more relaxed setting than a regular Board meeting and individuals could have chats with Board members. I gather that has morphed into the Librarian hosting a coffee time the first Thursday of every month beginning at 9:30 AM and lasting as long as people want to stay. Several of the Selectmen regularly attend these sessions.

My suggestion perhaps for a starting point is part of what we have discussed. I think a more informal meeting hosted by the Board of Selectmen at a location away from the Town Hall would be a good idea. I would recommend brief presentations from main department heads / program areas (i.e. – police, fire, Road Agent, building inspector, library, and parks & recreation at a minimum) with the ability for Q&A. Perhaps, for an initial trial effort, the meeting could be held in the cafeteria of the Auburn Village School in late September or early October. You might want to consider also including the School Board in the meeting as well, and possibly a tour of the new facilities could be included.

If this is successful, maybe attempting to include it in or around the annual Old Home Day as described by Sandwich above may be the ongoing process to consider. I also think having a catchy slogan or title would be a good thing to develop. Those who use something like a "Coffee with the Town", "Coffee Time" or the like I think are good as they imply a less formal format. I would note the Police Department is currently holding "Coffee with a Cop" meetings and we shouldn't use anything that might confuse the two efforts. Perhaps something like "Talk of Auburn", "Talk with the Town", "Chat with the Town" or something of the sort might be a good title.

I am attaching copies of the e-mail communications I received from most of the communities so you can see their full responses. The Durham Town Administrator called me directly and verbally offered the information on their past efforts.

As you raised this for consideration, I thought I should first share this base information with you. I will be happy to follow your lead for timing and discussion with the full Board.

Thank you for your consideration.

Attachments

Bill Herman

From: mmanh@googlegroups.com on behalf of Scott Dunn <sdunn@gilfordnh.org>
Sent: Wednesday, May 08, 2019 4:48 PM
To: Bill Herman; MMANH
Subject: [MMANH] RE: Community Forum / Meeting

Hi Bill,

We used to have an annual summer forum for our seasonal residents. The meeting was at Town Hall, in the regular meeting room. Each department head would give a brief presentation on their priorities and challenges and that was followed by a Q&A session. We would advertise these meetings in the newspaper and our website in addition to sending out notices through the Gilford Island Association.

Over the years the interest diminished until it reached a point where it was the same 2-3 people coming who seemed to have an ax to grind.

The Selectmen decided to stop doing this a few years ago and there were no complaints. This may be partly due to the fact the Selectmen have a public input session on every agenda so anyone with an issue can come to a public meeting and express their concerns. Of course not many people take advantage of that either.

I can certainly understand a new Selectmen wanting to reach out to folks to see what happens and I would not discourage that. Good luck!

Regards,

Scott J. Dunn, Town Administrator
Town of Gilford
47 Cherry Valley Road
Gilford, NH 03249
(603) 527-4706

From: mmanh@googlegroups.com [mailto:mmanh@googlegroups.com] **On Behalf Of** Bill Herman
Sent: Wednesday, May 08, 2019 4:37 PM
To: MMANH <mmanh@googlegroups.com>
Subject: [MMANH] Community Forum / Meeting

Our newest BOS member is interested in having the Board pursue holding an informal meeting for the public separate from a regular BOS meeting and our more formal public hearings and Town Meeting. I believe he had seen some notices for a meeting like this in a seacoast community or two, and brought the idea back to the Auburn Board.

His thought is to hold something at the end of the summer in a setting away from Town Hall where the BOS and key department heads could make themselves available to the public for a less formal, more friendly "conversation" about what is happening in Town, concerns residents may have, projects & initiatives the Town may be working on, etc. His vision is to use it as an added communications tool with the public.

I am just wondering if any of you have done this type of meeting / forum with any regularity (once or twice a year) and, if so, can you share info on what worked well, what didn't, etc. Was there a presentation of some kind followed by questions? Was an agenda developed and followed, or was just a loose, informal conversation held?

Bill Herman

From: Mark Bender <mbender@milford.nh.gov>
Sent: Thursday, May 09, 2019 8:07 AM
To: Bill Herman; MMANH
Subject: RE: Community Forum / Meeting

Bill,

Our board meets the 2nd and 4th Monday each month. They hold a 5th Monday Forum when the calendar allows. This is a less formal meeting, usually with no agenda to allow residents to simply talk with the selectmen in a more relaxed session. Minutes are taken and the meeting is televised as usual.

We schedule public comments at two times on each BOS meeting agenda so the public has ample opportunity to speak.

Best Regards,

Mark Bender

Town Administrator
Town of Milford
1 Union Square
Milford, NH 03055

603-249-0601

The Right-to-Know Law (NH RSA 91-A) provides that most email communications to or from town employees regarding the business of the Town of Milford are government records available to the public on request. This email communication may be subject to public disclosure.

From: mmanh@googlegroups.com [mailto:mmanh@googlegroups.com] **On Behalf Of** Bill Herman
Sent: Wednesday, May 8, 2019 4:37 PM
To: MMANH
Subject: [MMANH] Community Forum / Meeting

Our newest BOS member is interested in having the Board pursue holding an informal meeting for the public separate from a regular BOS meeting and our more formal public hearings and Town Meeting. I believe he had seen some notices for a meeting like this in a seacoast community or two, and brought the idea back to the Auburn Board.

His thought is to hold something at the end of the summer in a setting away from Town Hall where the BOS and key department heads could make themselves available to the public for a less formal, more friendly "conversation" about what is happening in Town, concerns residents may have, projects & initiatives the Town may be working on, etc. His vision is to use it as an added communications tool with the public.

I am just wondering if any of you have done this type of meeting / forum with any regularity (once or twice a year) and, if so, can you share info on what worked well, what didn't, etc. Was there a

presentation of some kind followed by questions? Was an agenda developed and followed, or was just a loose, informal conversation held?

Any input, observations and suggestions from those who have done something along these lines would be appreciated. The full Board appears interested in looking at this and possibly giving it a try in the fall.

Thanks in advance for anything you might be able to share.

Bill

Bill Herman, CPM
Town Administrator
Town of Auburn
PO Box 309
Auburn, NH 03032
(603) 483-5052, ext. 111

NOTICE: Privacy should not be assumed with e-mails associated with Town business. Under New Hampshire's Right-to-Know law (RSA 91-A), documents – including e-mail communications – in the possession of public officials or public agencies concerning Town business are classified as public records that may be subject to public disclosure.

--
You received this message because you are subscribed to the Google Groups "Municipal Management Association of New Hampshire." To reduce the number of e-mails sent to MMANH members, please reply only to the original sender of the message unless you believe your response will benefit the majority of readers or you are adding to a group discussion. Please refrain from sending personal messages or well wishes to the entire MMANH group.

Access to this list serve is only available to current full members of MMANH (membership application available at www.mmanh.org). If you have any other questions, e-mail group administrator Scott Dunn <sdunn@gilfordnh.org>.

You received this message because you are subscribed to the Google Groups "Municipal Management Association of New Hampshire" group.
To unsubscribe from this group and stop receiving emails from it, send an email to mmanh+unsubscribe@googlegroups.com.
To post to this group, send email to mmanh@googlegroups.com.
Visit this group at https://groups.google.com/group/mmanh.
To view this discussion on the web visit https://groups.google.com/d/msgid/mmanh/0B47D19D23F56A46A27DB097F7D1989B92F7E719%40ORD2MBX03B.mex05.mlsrvr.com.
For more options, visit https://groups.google.com/d/optout.

Bill Herman

From: tos@cyberpine.net
Sent: Wednesday, May 08, 2019 7:01 PM
To: Bill Herman
Subject: Re: [MMANH] Community Forum / Meeting
Attachments: image003.jpg

Hi Bill-
We do have such a meeting in Sandwich - we call it our 'Summer Town Meeting', and it is held during our Old Home Week in August. Its purpose is to allow summer residents an opportunity to learn more about Town government, our projects, schools, priorities, etc. Department Heads attend and provide a brief on their department, and our Town Moderator - well, 'moderates'. Folk lore says our population triples in the summer, and those summer residents certainly provide us with the majority of our tax base, so we are unique in that regard.
While called Summer Town Meeting, no decisions are made by the Selectmen - it is more just a year-in-review.

I provide the Selectmen with my usual cheat-sheet providing a summary of where we are YTD in the budget, road and bridge projects, and a summary of our warrant. The Moderator gets this as well so can instigate when necessary.
Summer residents love it, and others attend as well, especially if there are any hot topics to get discussed. Because the audience is composed of those who don't necessarily attend Town Meeting, we are always surprised at the question topics and what their priorities are v. full-time residents.
I would describe it as casual, and the atmosphere is always cordial. If any conversations go off track, our Moderator is there to bring it back, or at least shorten it up.
Because of Old Home Week it is a tradition in our Town, which tends to bring people out and attend. Hope this helps-
Best,
Cath

Catherine Graham
Administrative Assistant
Town of Sandwich
tos@cyberpine.net

From: Bill Herman <townadmin@townofauburnnh.com>
Sent: 5/8/19 4:36 PM
To: "MMANH " <mmanh@googlegroups.com>
Subject: [MMANH] Community Forum / Meeting

Our newest BOS member is interested in having the Board pursue holding an informal meeting for the public separate from a regular BOS meeting and our more formal public hearings and Town Meeting. I believe he had seen some notices for a meeting like this in a seacoast community or two, and brought the idea back to the Auburn Board.

His thought is to hold something at the end of the summer in a setting away from Town Hall where the BOS and key department heads could make themselves available to the public for a less formal, more friendly "conversation" about what is happening in Town, concerns residents may have, projects & initiatives the Town may be working on, etc. His vision is to use it as an added communications tool with the public.

Bill Herman

From: Michael T. Branley <mbranley@town.swanzey.nh.us>
Sent: Thursday, May 09, 2019 6:22 PM
To: Bill Herman; MMANH
Subject: RE: Community Forum / Meeting

Bill,

A few years ago the Selectmen here held Saturday morning "coffee and conversation" sessions roughly monthly at various spots around town. As others have described, there was some decent turnout at the first couple, however over time interest trailed off and eventually it was just the Selectmen and I at most of the sessions and then we stopped doing them. I think it was a noble effort (as is what you describe) however I think if you have relatively welcoming meetings people don't seem to generally want to come in when there isn't something specifically on an agenda they are interested in. I told them it is probably a good sign because people would be here letting you know if they weren't happy!

Good luck,

Michael T. Branley, MPA
Town Administrator

Town of Swanzey
PO Box 10009
Swanzey, NH 03446
(603) 352-7411 ext. 107
(603) 352-6250 (fax)
www.town.swanzey.nh.us

Email sent to and from this address is subject to NH RSA 91-A (the NH Public Records Law) and may, subject to certain exemptions, be subject to disclosure to third parties. This email message and any attachments may contain information that is confidential and/or legally privileged in accordance with applicable laws or regulations. It is intended only for the use of the person and/or entity identified as recipient(s) in the message. If you are not an intended recipient of this message, please notify the sender immediately and delete the material. Do not print, deliver, distribute or copy this message, and do not disclose its contents or take any action in reliance on the information it contains unless authorized to do so. Thank you.

From: mmanh@googlegroups.com [mailto:mmanh@googlegroups.com] **On Behalf Of** Bill Herman
Sent: Wednesday, May 08, 2019 4:37 PM
To: MMANH
Subject: [MMANH] Community Forum / Meeting

Our newest BOS member is interested in having the Board pursue holding an informal meeting for the public separate from a regular BOS meeting and our more formal public hearings and Town

Bill Herman

From: Scott Kinmond <skinmond@newdurhamnh.us>
Sent: Thursday, May 09, 2019 7:47 PM
To: Bill Herman
Cc: Bill Herman; MMANH
Subject: Re: [MMANH] RE: Community Forum / Meeting

Bill,

In New Durham we did "coffee with the Town." where we had coffee the first Wednesday of the month at the General Store from 9-10a. Each Selectman took a turn as well as myself and the department heads. As Mike mentioned, we had some interest and then it diminished, so we stopped.

Scott

Scott Kinmond, CPM
Town Administrator
Town of New Durham
P.O. Box 207, 4 Main St.
New Durham, NH 03855
603-859-2091 ext 106
Skinmond@newdurhamnh.us

Scott Kinmond Sent from my iPhone

On May 9, 2019, at 6:21 PM, Michael T. Branley <mbranley@town.swanzey.nh.us> wrote:

> Bill,
>
> A few years ago the Selectmen here held Saturday morning "coffee and conversation" sessions roughly monthly at various spots around town. As others have described, there was some decent turnout at the first couple, however over time interest trailed off and eventually it was just the Selectmen and I at most of the sessions and then we stopped doing them. I think it was a noble effort (as is what you describe) however I think if you have relatively welcoming meetings people don't seem to generally want to come in when there isn't something specifically on an agenda they are interested in. I told them it is probably a good sign because people would be here letting you know if they weren't happy!
>
> Good luck,
>
> Michael T. Branley, MPA
> Town Administrator
>
> Town of Swanzey
> PO Box 10009
> Swanzey, NH 03446
> (603) 352-7411 ext. 107
> (603) 352-6250 (fax)

Bill Herman

From: Laura Buono <laura@hillsboroughnh.net>
Sent: Thursday, May 09, 2019 3:11 PM
To: Bill Herman; MMANH
Subject: RE: Community Forum / Meeting

Hi Bill,

When I was a Selectman in Weare we would hold "coffee time" quarterly at the Library. It was a relaxed setting in which individuals were able to come and have chats with the Board members. This only lasted about a year and a half because most residents preferred to simply chat one on one either by phone or when they bumped into us in a store ... seriously. It's always worth a try.

Laura Buono, CPM
Town Administrator
Town of Hillsborough
PO Box 7
Hillsborough, NH 03244-0007
603.464.3877 ext. 222
603.464.5060 fax
Laura@Hillsboroughnh.net

Please note that all communications to and from this email address is subject to NH RSA 91-A which affords the public access to this information, with the exception of limited, sensitive information.

From: mmanh@googlegroups.com [mailto:mmanh@googlegroups.com] **On Behalf Of** Bill Herman
Sent: Wednesday, May 08, 2019 4:37 PM
To: MMANH
Subject: [MMANH] Community Forum / Meeting

Our newest BOS member is interested in having the Board pursue holding an informal meeting for the public separate from a regular BOS meeting and our more formal public hearings and Town Meeting. I believe he had seen some notices for a meeting like this in a seacoast community or two, and brought the idea back to the Auburn Board.

His thought is to hold something at the end of the summer in a setting away from Town Hall where the BOS and key department heads could make themselves available to the public for a less formal, more friendly "conversation" about what is happening in Town, concerns residents may have, projects & initiatives the Town may be working on, etc. His vision is to use it as an added communications tool with the public.

I am just wondering if any of you have done this type of meeting / forum with any regularity (once or twice a year) and, if so, can you share info on what worked well, what didn't, etc. Was there a presentation of some kind followed by questions? Was an agenda developed and followed, or was just a loose, informal conversation held?

Bill Herman

From: Naomi Bolton <nbolton@weare.nh.gov>
Sent: Friday, May 10, 2019 8:05 AM
To: Bill Herman
Subject: RE: Community Forum / Meeting

Hi Bill,
The Librarian in Weare hosts a coffee time the first Thursday of every month which starts at 9:30 AM and lasts as long as people want to stay. Four out of the five Board members are retired, so a couple of them usually attend quite regularly. The month before deliberative, sometimes 2 months if we are prepared, the library has school officials and town officials present to go over some of the hot button warrant articles. Then the Thursday before voting he invites all candidates running for a position to meet and greet people.

We also still have a public comment section on our weekly Monday night agenda, some nights have lots of people, some have nothing. As you well know the attendance is really geared to what is on the agenda or going on in the community.

I think if they would like to try it, go for it, but don't get discouraged if the attendance is poor. Firsts for a community can gain lots of interest, but as time goes on and issues diminish so does the attendance a lot of the time.

I wish you the best.
Take care,

Naomi L. Bolton

Naomi L. Bolton
Town Administrator
15 Flanders Memorial Road
Weare, New Hampshire 03281
(603) 529-7535 (Office Voice)
(603) 529-4554 (Fax)

CONFIDENTIALITY: This e-mail, including attachments, is intended for the exclusive use of the person or entity to which it is addressed and may contain confidential or privileged information. If the reader of this e-mail is not the intended recipient or his or her authorized agent, the reader is hereby notified that any dissemination, distribution or copying of this e-mail is prohibited. If you think you have received this e-mail in error, please advise the sender by reply e-mail of the error and then delete this e-mail immediately. Thank you.

From: mmanh@googlegroups.com [mailto:mmanh@googlegroups.com] **On Behalf Of** Bill Herman
Sent: Wednesday, May 08, 2019 4:37 PM
To: MMANH
Subject: [MMANH] Community Forum / Meeting

Our newest BOS member is interested in having the Board pursue holding an informal meeting for the public separate from a regular BOS meeting and our more formal public hearings and Town Meeting. I believe he had seen some notices for a meeting like this in a seacoast community or two, and brought the idea back to the Auburn Board.

Town of Auburn

Town Hall
47 Chester Road
P.O. Box 309
Auburn, NH 03032

Town Administrator

William G. Herman, CPM
Phone: (603) 483-5052 Ext. 111
Fax: (603) 483-0518
E-Mail:
townadmin@townofauburnnh.com

To: Board of Selectmen

From: Bill Herman, CPM, Town Administrator
Date: May 29, 2019
Re: Employer Share of Retirement Costs to Increase

Last week, the State Senate voted 12-11 to pass HB 616, which provides a 1.5% cost of living adjustment (COLA) to all New Hampshire Retirement System (NHRS) retirees who have been retired at least five years on the first $50,000 of their pension.

The bill had already been overwhelmingly passed by the House by a vote of 219 – 149, and the Governor has indicated he is in support of the measure and will sign it into law.

This means that even those retirees with a pension of $80,000, $90,000, or over $100,000 will receive a COLA of $750 (1.5% of $50,000) permanently added to their pensions. Overall, the bill is supposed to raise employer costs by nearly $150 million with the cost to local governments estimated at $116 million, and the cost to the state at $26 million. This will be added to the system's current $5 billion unfunded liability. The local government share will be paid by property taxpayers through increased NHRS employer contribution rates over the next 20 years.

At this point, there is not an immediate indication of how much the employer rates will be raised to cover this additional expense, but it is unlikely rates would be changed any earlier than July 1, 2020.

During the House debate and vote on this measure, all five of Auburn State Representatives (Jesse Edwards, Jason Osborne, Becky Owens, Tony Piemonte and Chris True) all voted against the adoption of HB 616.

On the Senate side, Senator Carson also opposed the measure due to the liability the bill creates, the increased property tax burden it will place on local taxpayers, and the potential for a costly unfunded mandate lawsuit.

Senator Carson had offered a floor amendment that would have instead made a $500 payment to retirees with pensions under $40,000 to be paid from the state general fund at a cost of approximately $8 million. This how the State had provided the last three NHRS COLA's, which appears to be a better deal for retirees at the low end of the pension scale, since it sent more money sooner to those who need it the most. The amendment also created a study commission to look at the method for future COLAs. This amendment was defeated by a vote of 11 – 12.

Thank you for your consideration.

Cost of living increase for NH retirees passed by Senate

By KEVIN LANDRIGAN

New Hampshire Union Leader

CONCORD — The pivotal step to deliver the first costof- living adjustment for nearly 30,000 retired public employees in a decade narrowly cleared the State Senate Thursday.

The 12-11 vote sends the bill (HB 616) for a 1.5 percent increase to the desk of Gov. Chris Sununu, who has said he will sign it.

The increase, effective July 1, would only to go to state, county and local retirees who finished their government service at least five years ago.

The COLA would be capped at a $50,000 pension, meaning no retiree would get more than $750 per year from it.

Senate Majority Leader Dan Feltes, D-Concord, said the state's unfunded pension liability remains high but the system has stabilized and can well afford this modest increase.

"In my district, 2,400 retirees including people who have worked their entire life, dedicated public servants struggling with food, medicine, heat and rent and we can't finally go forward with an actual COLA," Feltes said.

"It's been too long."

Sen. Jeb Bradley, RWolfeboro, pointed out lawmakers approved one-time $500 stipends for retirees in 2011, 2013 and 2018, but a permanent COLA would increase local property taxes by nearly $150 million over the next 20 years.

The COLA would raise state taxpayer costs by more than $40 million over the same period.

"You can't on the one hand promise property tax relief and then on the other vote for a plan to raise them by $150 million," Bradley said.

Senate Republicans had again proposed Thursday a one-time, $500 stipend but that failed on the same, 12-11 vote.

The Senate GOP plan would have paid the stipend with $7 million in state dollars and only grant it to those making up to a $40,000-a-year pension.

Sen. Jeanne Dietsch, DPeterborough, broke ranks with the other Senate Democrats and she opposed the COLA and backed the onetime stipend.

She said the state retirement system could not estimate the impact of this increase on local property taxes in her district towns.

"I can't go back to my towns ... I can't go back to the taxpayers that I promised I would lower your property taxes and vote to raise your property taxpayers," Dietsch said.

The New Hampshire Retirement Security Coalition said in a statement studies have shown 80 percent of the economic benefit from this COLA would remain in NH.

Sen. Harold French, RFranklin, said most of the retirees in his district have lower pensions and would get more from a one-time, $500 stipend than a 1.5 percent increase.

But Sen. Kevin Cavanaugh, D-Manchester, said it's time retirees get an increase they can depend on year after year.

"They want the COLA because they can depend on it," Cavanaugh added.

klandrigan@unionleader.com

Copyright © 2019 Union Leader Corporation. All rights reserved. 5/24/2019

Announcement

Household Hazardous Waste Collection

SEPTEMBER 14, 2019

8:00 A.M. TO 12 NOON

The end of Industrial Drive
Off Old Manchester Road (exit 4)
(across from the Safety Complex, Raymond, NH)

Auburn, Nottingham and Raymond Residents Only

- Maximum quantity per household is 5 gallons or 5 pounds whichever is higher
- No motor oil or latex paint will be accepted

Any questions please call Raymond Public Works at 895-7036.

Town of Auburn

Town Hall
47 Chester Road
P.O. Box 309
Auburn, NH 03032

Town Administrator

William G. Herman, CPM
Phone: (603) 483-5052 Ext. 111
Fax: (603) 483-0518
E-Mail:
townadmin@townofauburnnh.com

To: Board of Selectmen

From: Bill Herman, CPM, Town Administrator
Date: May 24, 2019
Re: Sale of Surplus Police Vehicle

As authorized by the Board of Selectmen, we placed the surplus police cruiser (a 2014 Ford Explorer with 91,658 miles that had been a K-9 vehicle) in the State of New Hampshire Surplus Property auction held in Concord on May 18th.

Auburn continued to fare well using this process as opposed to past efforts at offering surplus vehicles by sealed bid. The vehicle sold for a total of $5,500. The auctioneer receives 10% of the sale price off the top, so the Town has received a payment of $4,950 for the vehicle.

There was an expense of $100 for the Town to have the vehicle towed to the auction site in Concord as it was no longer registered once the Police Department swapped the registrations and plates for the new vehicle that was placed into service to replace this vehicle. As a result, the net gain to the Town was $4,850.

That compares to a range of $500 to $4,300 that has been received in years past for various vehicles sold by sealed bid, but is not quite what came in last year for the 2013 model with relatively low mileage (58,613) sold at auction that brought in $7,250 (less the 10% and the $100 tow fee resulting in a net proceed of $6,525).

Thank you for your consideration.

Attachment

James R. St. Jean
AUCTIONEERS

MAY 29 2019

May 23, 2019

Dear Consignor:

Attached please find a final statement relative to the items consigned to the State of NH surplus property auction held on May 18, 2019 at the White Farm in Concord, NH. Also enclosed is a check for the proceeds. We want to thank the 27 municipalities & non-profits who participated in this spring's sale which attracted over 950 registered bidders. Results of the auction are now posted on the "recent sales" page on our website: www.jsjauctions.com

Thank you for your participation and we look forward to serving you again. The next State of NH surplus property auction will be held in the fall of 2019. Should you have a need to sell vehicles & equipment before the spring auction, please contact us for information on selling these assets in an ONLINE AUCTION.

If you have any questions about your statement, the upcoming spring auction or selling your assets online, please do not hesitate to contact us.

Sincerely,

Jay T. St. Jean
Sue Hennas
James R. St. Jean Auctioneers

45 Exeter Road, P.O. Box 400, Epping, New Hampshire 03042-0400, Telephone: (603) 734-4348, Fax (603) 734-4349
RESIDENTIAL, COMMERCIAL & INDUSTRIAL REAL ESTATE • BUSINESS LIQUIDATIONS & ESTATES
www.jsjauctions.com

Consignor Settlement

v9.08-COPay-11

CO #:	590
Date:	5/14/2019
Page:	1

Consignor: AUBURN

Description	Quantity	Unit Price	Ext.Price	Yard Fee
2014 FORD EXPLORER 91658 Miles WHITE	1.00	5,500.00	5,500.00	-550.00

Total Quantity:	1.00
Balance:	$4,950.00

Positive Balance, Monies Owed to Consignor

No inventory remains for this consignment order

Town of Auburn

Town Hall
47 Chester Road
P.O. Box 309
Auburn, NH 03032

Town Administrator

William G. Herman, CPM
Phone: (603) 483-5052 Ext. 111
Fax: (603) 483-0518
E-Mail:
townadmin@townofauburnnh.com

To: Board of Selectmen

From: Bill Herman, CPM, Town Administrator
Date: May 28, 2019
Re: Property Tax Exemptions and Tax Credits - Update

In follow-up to the information provided to the Board at your meeting on May 20, 2019 concerning property tax exemptions and tax credits available in the Town of Auburn during tax year 2018, there is a small adjustment to report on the information provided.

As noted by Keith Leclair at the meeting, the impact of the two property tax credits – Veteran's Tax Credit and the Service Connected Total Disability Tax Credit – did not appear to be correct in terms of the overall impact on the tax rate. He was correct.

The impact listed for the Service Connected Total Disability Tax Credit as presented with less than a $0.01 impact was not correct. That impact treated the 20 Service Connected Total Disability Credit valued at $40,000 as an exemption, and not as a tax credit.

The correct tax rate impact based on FY 2018 net assessed valuation was $0.05, and not less than $0.01. The correct value appear in the attached summary report.

This correction results in a total of $0.32 of 2018's tax rate of $17.06 being accounted for in the various property tax exemptions and tax credits currently offered by the Town of Auburn.

Thank you for your consideration.

Attachments

TOWN OF AUBURN
PROPERTY TAX EXEMPTIONS AND TAX CREDITS - 2018

Exemption or Credit	*Statute*	*# Issued*	*Dollar Value*	*Tax Rate Impact*
Exemptions				
Improvements to Assist the Deaf	RSA 72:38-b V	1	$174,576	$0.01
Discreationary Preservation Easements	RSA 79-D	5	$35,252	>$0.01
Optional Exemptions				
Blind Exemption	RSA 72:37	1	$50,000	>$0.01
Elderly Exemption	RSA 72:39-a,b	23	$4,156,600	$0.08
Disabled Exemption	RSA 72:37-b	10	$500,000	$0.01
Tax Credits				
Veteran's Tax Credit	RSA 72:28	270	$135,000	$0.16
Service Connected Total Disability	RSA 72:35	20	$40,000	$0.05
TOTAL				$0.32
Solar Energy Systems Exemption	*RSA 72:62*	*44*	*$945,000*	*$0.02*

Data based on 2018 Assessed Values and Property Records
2018 Total Net Assessed Valuation - $845,294,116
2018 Tax Rate - $17.06

Originally Prepared - May 13, 2019
Updated - May 22, 2019

Bill Herman

From: Carol Cloutier <zoest@comcast.net>
Sent: Thursday, May 30, 2019 12:44 PM
To: Bill Herman
Subject: Haven Drive

Mr. Herman,

Thank you for your reply and please pass along to Mr. Dross my appreciation for forwarding my request to the Selectmen and the consideration of my request. I'm greatful our town officials look into these type of requests so speedily and are also sympathetic to my concern, as I'm sure some of them are in the same boat as us. And, due to the decision given, I took the time to read the Town of Auburn Speed Ordinance. It was informative and interesting, but I did not see it written in the ordinance that an engineering study must be performed to change the speed limit. I did read that some state roads must have DOT approval, but I believe the town roads were under the Selectmen's jurisdiction. If you can direct me to where I can educate myself regarding the engineering review since I'd appreciate understanding more on how these decisions are made. I do not want to spend tax money on a study, but It seems crazy that state highways have lower speed limits than residential roads.

I have lived on this street for 40 years. I've never had the concern I've had for the last year regarding the speed of the vehicles driving down my street. I understand Auburn's growth and I also understand I'll just have to live with the addition of traffic because of the continuation of Haven Drive, but that should not include understanding or being happy with the increased traffic driving fast down the hill. Nature at it's finest: the speed at the top of a hill is not the speed at the bottom as gravity's power will force a car to go faster and vehicles take longer to stop. (i.e. the brake marks in front of my house from my neighbor's drive way to mine - approx. 200 ft). This is not the1st instance, but the one which has made me request that something be changed to prevent someone getting hurt. I don't know if the issue is people are just in more of a hurry today, or if the new detour down Haven Drive with people unfamiliar of our neighborhood are causing them not to be mindful while driving down our road. Where 35 mph may have been adequate for everyones safety when the ordinance was adopted in 2014, Auburn side streets did not have the amount of traffic as they do today. Times have changed and sometimes we have to look to change what once was adequate for that time, but not longer viable today. Our Ordinance states it was established to create safe and reasonable speeds in our town. It is not the sleepy country town it was when these speeds were established. Haven Drive was a dead end, it no longer is. Drive down Wilson Crossing or Rattlesnake Road, and tell me if the 35 mph speed limit is being adhered to. When I moved to Auburn, Wilson Crossing was partially a dirt road; a few years ago Lovers Lane was a dirt road. Auburn has changed and with our growth I feel that requests such as mine are more than just one person complaining and the Board should considered these requests as an important part of Auburn's growth and changing needs.

Town of Auburn Speed Limit Ordinance:

Section 1: Purpose: The purpose of this ordinance is to establish safe and reasonable speed limits for the protection of the life and property on any way within the town of Auburn
Section 2: Authority: The authority for the Auburn Board of Selectmen to regulate municipal highways is contained in RSA 41:11, which also includes the authority of City Councils outlined in RSA 47:17 (VII) and (V111).

[41:11 Regulation of Use of Highways, Etc. – Unless regulated by the commissioner of the department of transportation as provided in RSA 236:1, the selectmen may regulate the use of all public highways, sidewalks, and commons in their respective towns and for this purpose may exercise all the powers conferred on city councils by RSA 47:17, VII, VIII, and XVIII, and by any other provisions of the laws upon the subject.]

Section 7: 30 mph / State Highways: It shall be unlawful for any person to operate a motor vehicle in excess of 30 mph on any of the following state highways of extensions thereof. Pursuant to the provisions of RSA 265:63 IV, Town of Auburn officials shall not alter the 35 mph speed limit on any state highways or extensions thereof until such alteration has been approved by the commissioner of the NH Department of Transportation. State highways or extensions thereof in the Town of Auburn with 30 mph speed limits include: Chester Road (Route 121) - (Curve near Calef Road); Chester Road (Route 121) - (Curve near 278 Chester Rd); Chester Road (Route 121) -Intersection with Bunker Hill Road to four-way intersection with Hooksett Road, Manchester Road and Raymond Road); Londonderry Turnpike (By-Pass 28) - (Section approaching the Massabesic Traffic Circle). Route 121A is a state highway and I believe the speed limit is reduced to 30 mph through the center of town in Chester; and as you continue to Derry/Hampstead it's marked as 35 mph. For our tiny county street, 35 mph seems our of proportion. Our town ordinance, Section 1: Purpose says:

Section 8: 35 mph / Municipal Roads: It shall be unlawful for any person to operate a motor vehicle in excess of 35 miles per hour on any of the following street, highways and public ways: A list is given and Haven Drive is on this list.
Sections: #4 - 45 mph / State Highways; #5- 40 mph / State highways; #6 - 35 mph / State Highways; #7 - 30 mph / State Highways - all sections state: Town of Auburn officials shall not alter the (??) mph speed limit on any state highways or extensions thereof until such alterations has been approved by the Commission of the NH Department of Transportation.

And on a side note, for your consideration of any other new future developments in town that get approved, you may want to considered how this type of traffic will impact our current roads and ultimately cost the tax payers for road repairs or replacement. In addition to my concern of Haven Drive's speed limit is the roads condition. Our residential neighborhood of Haven Drive, has been used as the access to the new development. The heavy trucks using Haven Drive from the very start of the attached development is deteriorating our fairly new road and is show more fatigue than it should for it's age. The weight of the logging trucks which hauled equipment in and out of the wooded acreage of the new developed section of Haven Dr. and then the removal of large loads of trees up the hill; these same trucks and their weight parked on the side of the road, which caused road edge cracking. Also, the turning and backing up of these logging trucks on Highwood deteriorated the corner. The contractor vehicles with their equipment utilizing Haven Drive, to the many delivery trucks, landscape trucks, general traffic, etc. being directed down Haven (I assume by google maps) and the additional traffic pattern through our residential neighborhood has most definitely also taken toll it's on the Haven/Highwood roads. It's supporting foundation was probably not designed/engineered to take the weight of the vehicles which have been using Haven for over a year.

Just for reference, I'm attaching photo's of (yesterday's) traffic down my street. The or 3 cement truck(3) went up and down Haven - 3 times. So where in a few weeks when a permit is given and the road is open, the difference will be that they will no longer come down the road, back-up, go down Highwood, and go back up Haven, they will just go down Haven and then go back up. ;o)

REDIMIX
COMPANIES
5102

Since Haven Drive is under the jurisdiction of the Auburn Selectmen and the ordinance does not state it must receive approval from the DOT to alter current speed limits, I would appreciate it if the Town of Auburn Selectmen would re-consider their decision and reduce the speed to 30 mph instead of the 25 mph I previously noted in my email to Mike Dross. Would you suggest I get a petition with signatures? Or, do you feel the matter is closed even with a petition and its a waste of everyone's time. Your advice in this manner as Town Administrator would be appreciated.

Thank you for your consideration & time,
Carol Cloutier

On May 21, 2019, at 4:04 PM, Bill Herman <townadmin@townofauburnnh.com> wrote:

Cc: Mike Dross

Mrs. Cloutier --

Road Agent Mike Dross received your original e-mail message, and discussed it last evening with the Board of Selectmen who are the regulators of town roads.

The Board was sympathetic to the overall concerns raised about traffic turning around and using your driveway. While it remains in private control, the Town has no authority over the extension of Haven Drive and cannot order it open to traffic. As a result, the Board was supportive of placing a "No Outlet" sign at the beginning of Haven Drive in an attempt to reduce the volume of traffic that might go down the road.

However, the Building Inspector advised the Road Agent and I this morning that the developer is very near to securing a Certificate of Occupancy for one of the new homes on the Haven Drive extension, which will result in the new road being open to traffic. Her comment to Mike and I was if he put a sign up today, he will likely be taking it down within just a few weeks. As a result, I believe the Road Agent will now hold off on erecting the sign at this time.

During their discussion, the Board indicated the speed limit was not something they would consider changing. Virtually all roads in town have a 35 mph limit and subdivision roads, in particular, are designed for that standard. To lower a speed limit, there is a formal process required under the statutes which includes an engineering review to determine a lower speed limit is required due to the condition of the road. The Board did not feel that was warranted in this situation.

Thank you for your consideration.

Bill

Bill Herman, CPM
Town Administrator
Town of Auburn
PO Box 309
Auburn, NH 03032
(603) 483-5052, ext. 111

<image001.jpg>

NOTICE: Privacy should not be assumed with e-mails associated with Town business. Under New Hampshire's Right-to-Know law (RSA 91-A), documents – including e-mail communications – in the possession of public officials or public agencies concerning Town business are classified as public records that may be subject to public disclosure.

-----Original Message-----
From: cmsmailer@civicplus.com [mailto:cmsmailer@civicplus.com]
Sent: Monday, May 06, 2019 2:23 PM
To: Bill Herman <townadmin@townofauburnnh.com>
Subject: Haven Drive

Submitted on Monday, May 6, 2019 - 2:23pm Submitted by anonymous user: 73.119.154.16 Submitted values are:

What does this comment regard? Road Agent
Subject: Haven Drive
Message: Good Afternoon: Is there any way we can get a temporary sign at the top of Haven / Rattlesnake Road that says "Not a Thru way" and possibley

change the speed sign to 25 mph instead of 35 mph. Unfortunately now,
Google directions/maps is sending people down haven to get to the homes on
the Pingree Hill / Haven end of Haven Dr. Google does not know this road is
not "open" or an approved road and cars, delivery trucks, cement trucks are speeding down Haven Drive, getting to the corner of Highwood/Haven and realizing it's not a thru road and using our driveways here at the bottom of the road to turn. I've had people get out of their car, walk into my yard to get directions, twice now I've had people drive in my drive and ring my door bell asking for directions on how to get to the other side and today while working outside I watched a landscape truck coming flying down the road and
slamming his brakes because he realized there was no where to go. If you
come down today and have a look you see the brake marks that started at my neighbors driveway and ended at my driveway, that's about 200 feet of or more
of slammed brakes. There are children who play down here and anything you
can do to help ease this situation until the road opens would greatly be appreciated.
Your Name: Carol Cloutier
Your Email: zoest@comcast.net

The results of this submission may be viewed at:
https://www.auburnnh.us/node/5661/submission/3943

TITLE XXI
MOTOR VEHICLES

CHAPTER 265
RULES OF THE ROAD

Speed Limitations

Section 265:60

265:60 Basic Rule and Maximum Limits. –

I. No person shall drive a vehicle on a way at a speed greater than is reasonable and prudent under the conditions and having regard to the actual and potential hazards then existing. In every event speed shall be so controlled as may be necessary to avoid colliding with any person, vehicle, or other conveyance on or entering the way in compliance with legal requirements and the duty of all persons to use due care.

II. Where no hazard exists that requires lower speed for compliance with RSA 265:60, I, the speed of any vehicle not in excess of the limit specified in this section or established as hereinafter authorized shall be prima facie lawful, but any speed in excess of the limit specified in this section or established as hereinafter authorized shall be prima facie evidence that the speed is not reasonable or prudent and that it is unlawful:

(a) In a posted school zone, at a speed of 10 miles per hour below the usual posted limit from 45 minutes prior to each school opening until each school opening and from each school closing until 45 minutes after each school closing.

(b) 30 miles per hour in any business or urban residence district as defined in RSA 259:118;

(c) 35 miles per hour in any rural residence district as defined in RSA 259:93, and on any class V highway outside the compact part of any city or town as defined in RSA 229:5, IV;

(d) 55 miles per hour in other locations, except as provided in (e);

(e) 65 miles an hour on the interstate system, the central New Hampshire turnpike and the eastern New Hampshire turnpike in locations where said highways are 4-lane divided highways or other divided highways of 4 or more lanes, except that the speed limit on the portion of I-93 from mile marker 45 to the Vermont border shall be 70 miles per hour.

(f) On a portion of a highway where officers or employees of the agency having jurisdiction of the same, or any contractor of the agency or their employees, are at work on the roadway or so close thereto as to be endangered by passing traffic, at a speed of at least 10 miles per hour below the usual posted limit. The speed shall be displayed on signs as required by RSA 265:6-a.

(g) For a vehicle equipped with a transponder, 25 miles per hour through a toll booth or gate that is equipped with a transponder reader for automated toll collection except for an open road tolling lane and except that at toll booths staffed by toll collectors drivers whose vehicles are not equipped for automated tolling shall come to a full stop at the toll booth so that the attendant may collect the toll.

(h) In the toll collection area of an open road tolling lane, at a speed greater than is reasonable and prudent for the conditions and actual and potential hazards existing at the time or greater than a per se maximum speed of 65 miles per hour, whichever is less.

III. The limits specified in subparagraphs II(e) and II(g) shall be the maximum lawful speed and no person shall drive a vehicle on said ways at a speed in excess of such maximum limit. The prima facie

speed limits set forth in this section may be altered as authorized in RSA 265:62.
IV. The driver of every vehicle shall, consistent with requirements of paragraph I, drive at an appropriate reduced speed when approaching and crossing an intersection or railway grade crossing, when approaching and going around a curve, when approaching a hillcrest, when traveling upon any narrow or winding roadway, and when special hazard exists with respect to pedestrians or other traffic by reason of weather or highway conditions.
V. The fines for violation of subparagraphs II(a)-(d) shall be as follows:
Miles per hour above the limit specified:

```
1-10 $50
 11-15 75
 16-20 100
 21-25 200
 26+ $350
```

The fines listed in this paragraph shall be plus penalty assessment.
VI. The fines for violations of subparagraph II(e) shall be as follows:
Miles above the 65 mph limit:

```
1-5 $65
 6-10 100
 11-15 150
 16-20 250
 21+ 350
```

Miles above the 70 mph limit:

```
1-5 $65
 6-10 100
 11-15 200
 16-20 300
 21+ 400
```

The fines listed in this paragraph shall be plus penalty assessment.

Source. 1905, 86:8. 1909, 154:4. 1911, 133:13. 1921, 119:13. PL 103:17. 1927, 76:2. 1937, 125:1. RL 119:29. 1949, 286:1. RSA 263:53. 1963, 330:1. RSA 262-A:54. 1965, 335:1. 1979, 358:4. 1981, 146:1. 1987, 217:1. 1988, 245:11. 1989, 164:1. 1997, 11:1. 1999, 73:1. 2005, 177:42. 2010, 51:2, 3. 2013, 192:1, eff. Jan. 1, 2014. 2015, 202:8, eff. Jan. 1, 2016. 2018, 160:1, eff. Aug. 3, 2018.

TITLE XXI
MOTOR VEHICLES

CHAPTER 265
RULES OF THE ROAD

Speed Limitations

Section 265:63

265:63 Alteration of Limits. –
I. Whenever local authorities in their respective jurisdictions determine on the basis of an engineering or traffic investigation that the prima facie speed permitted under this chapter is greater or less than is reasonable and safe under the conditions found to exist upon a way or part of a way, the local authority may determine and declare a reasonable and safe prima facie limit thereon which:
(a) Decreases the limit at intersections;
(b) Increases the limit within an urban district but not to more than 60 miles per hour;
(c) Decreases the limit outside an urban district but not to less than 25 miles per hour; or
(d) Decreases the limit within any business or urban residence district but not to less than 25 miles per hour.
II. Local authorities in their respective jurisdictions shall determine by an engineering or traffic investigation the proper prima facie speed for all arterial streets and shall declare a reasonable and safe prima facie limit thereon which may be greater or less than the prima facie speed permitted hereunder for an urban district.
II-a. Local authorities shall not be required to hire outside consultants to determine the proper prima facie speed limits as provided in paragraphs I and II if the local community has sufficient staff to conduct the required engineering or traffic investigation.
III. Any altered limit established as hereinabove authorized shall be effective at all times or during hours of darkness or at other times as may be determined when appropriate signs giving notice thereof are erected upon such street or way.
IV. Any alteration of limits on state highways or extensions thereof in a municipality by local authorities shall not be effective until such alteration has been approved by the commissioner of transportation.
V. Notwithstanding the other provisions of this section, local authorities shall modify the speed limits authorized herein so that said speed limits shall not exceed the temporary prima facie speed limits established for the state highway system under RSA 265:62, II, so long as the same are in effect.

Source. RSA 262-A:56-a. 1965, 335:3. 1974, 45:10. 1981, 146:1. 1989, 306:1. 1990, 74:1, 2, eff. June 9, 1990.

Town of Auburn
Board of Selectmen
May 20, 2019

Selectmen Present: Richard Eaton, Keith Leclair and Todd Bedard

Others Present John Kenyon, Shawn Matte, Michael Rolfe, Road Agent Mike Dross, Linda Dross, Paula Marzloff, Dale Phillips, Mike DiPietro, Russell Sullivan, Marion Miller, Christine McLaughlin, Todd Dignard, Lt. Charles Chabot, Audrey Trickett, Fire Chief Mike Williams, Police Chief Ray Pelton, Town Administrator William Herman and Nancy Hoijer, Recording Secretary

Non-Public Session – RSA 91-A: 3, II, (c) Consideration of the reputation of someone other than a member of the Board

Mr. Leclair moved to go into Non-Public Session pursuant to RSA 91-A: 3, II, (c) consideration of the reputation of someone other than a member of the Board. Mr. Bedard seconded the motion. A roll call vote was taken: Mr. Eaton – yes; Mr. Leclair – yes; Mr. Bedard, yes. All were in favor, the motion passed unanimously.

The meeting room was closed to the public at 6:00 pm.

Mr. Leclair moved to come out of non-public session at 6:32 pm. Mr. Bedard seconded the motion, with all in favor, the motion passed unanimously.

The meeting room was re-opened to the public at 6:32 pm.

Mr. Leclair moved to seal the minutes of the non-public session. Mr. Bedard seconded the motion, with all in favor, the motion passed unanimously.

Call to Order – Pledge of Allegiance

Mr. Eaton called the public meeting to order at 7:00 pm.

Approval of Payroll Manifest for the Week of May 13, 2019 - $49,121.72

Mr. Leclair motioned to approve the Payroll Manifest for the Week of May 13, 2019 in the amount of $49,121.72. Mr. Bedard seconded the motion, with all in favor, the motion passed unanimously.

Approval of Accounts Payable Manifest for the Week of May 20, 2019 - $91,738.44

Mr. Leclair motioned to approve the Accounts Payable Manifest for the Week of May 20, 2019 in the amount of $91,738.44. Mr. Bedard seconded the motion, with all in favor, the motion passed unanimously.

Approval of Consent Agenda for the Week of May 20, 2019

Mr. Eaton read out loud and offered for inspection a copy of the Consent Agenda for the Week of May 20, 2019 some of which included: one (1) Raffle Permit/Auburn Soccer Club, one (1) Notice of Intent to Cut Wood or Timber/By-Pass 28, one (1) Property Tax Warrant to Tax Collector/First Issue Property Taxes, one (1) Betterment Assessment Warrant to Tax Collector/First Issue, one (1) Payment in Lieu of Taxes/Manchester Water Works, and four (4) pistol/revolver licenses.

Mr. Leclair motioned to approve the Consent Agenda for the Week of May 20, 2019. Mr. Bedard seconded the motion, with all in favor, the motion passed unanimously.

Public Hearing (Previously Advertised) – Gift of boat, motor and trailer for Auburn Fire Department from Auburn Volunteer Firemen's Association

Mr. Eaton opened the Public Hearing at 7:02 PM.

Mr. Herman advised the donation of the boat, motor and trailer by the Auburn Volunteer Firemen's Association needed to be voted on by the Board of Selectmen to formally accept on behalf of the Town. The package has a total MSRP value of $22,795.

Mr. Leclair asked where the new boat and old boat would be stored. Chief Williams advised the new boat would be stored at the Safety Complex and the older boat at Station 2.

Chief Williams noted there will be some additional equipment to come for the new boat including other accessories such as depth reporter, and PFDs.

Mr. Leclair moved to accept from the Auburn Volunteer Firemen's Association on behalf of the Town of Auburn the gift of a 2019 Tracker 2072 CC boat, Mercury Marine outboard motor and a Trailstar trailer with a MSRP of $22,795.00 for use by the Auburn Fire Department. Mr. Bedard seconded the motion, with all in favor, the motion passed unanimously.

The Board thanked the Auburn Volunteer Fireman's Association for their generous gift.

Appointments with the Board

John Kenyon – Robotic Lawn Mowing for Town Hall

Mr. Kenyon presented a proposal for landscaping at Town Hall which included removing dead shrubs and trees, planting arborvitaes, mulching, irrigation, a new lawn, a mulch bed along the sign and flagpole, replacing the walkway with pavers and the option to either hydroseed or install sod. $53,000 would include everything and Mr. Kenyon would like to conduct a site walk.

Mr. Eaton requested a landscape drawing. Mrs. Phillips indicated she was in favor of removing the dead tree out front before the leach field and septic were damaged, and further suggested the items could be done in phases. Mr. Kenyon will put together a proposal which prioritizes the items in phases and submit it to the Town Administrator. Mr. Eaton explained if accepted, it would have to go into next year's budget and that season begins in October/November.

Mr. Kenyon explained with the remote operated robotic mowing system, the mowing can be done at any time or the day or night regardless of weather and would not be impacted by labor issues. Mr. Eaton asked if Mr. Kenyon would be mowing the cemetery and Town properties prior to the Memorial Day holiday as the grass at the cemetery is over 6" now due to fertilizing and rain. Mr. Kenyon advised he is not in charge of scheduling, but was certain they plan to be out there this week.

Mr. DiPietro noted there is water running off the roof of the Town Hall porch splattering up on the newly painted building and this will cause maintenance issues over time.

Shawn Matte – Applicant for ZBA Alternate Position

Mr. Herman provided a copy of Mr. Matte's application and advised there were two openings with different terms, a one-year and a three-year term.

Mr. Leclair asked why Mr. Matte was interested in the position. Mr. Matte indicated he would like to become more involved in the Town.

Mr. Leclair moved to appoint Mr. Matte as an Alternate member to the Zoning Board of Adjustment with a term to expire in March 2022. Mr. Bedard seconded the motion, with all in favor, the motion passed unanimously.

John Farnum – Permission to trench conduit on Grey Point Road

Mr. Herman advised the request for a trench within the road right-of-way to install conduit is to provide services for Waste Management's operation facility. A copy of the proposal was provided. The proposal was shared with Dan Tatem at Stantec who recommended the $2,500 surety bond and license agreement.

Mr. Bedard moved to approve the proposed project of trenching along Grey Point Road to install approximately 520-feet of conduit by Comcast, and further to approve the proposed license agreement for this project and to authorize Selectmen Chair Richard Eaton to sign the agreement on behalf of the Town. And, to set $2,500 as the amount for a surety bond to be posted for this project. Mr. Leclair seconded the motion, with all in favor, the motion passed unanimously.

Fire Chief Michael Williams – Monthly Meeting

Chief Williams provided his monthly report for April 2019. There were 52 incidents, which was a busy month.

The Department hosted a first responder awareness class on Fentanyl and drug emergencies with was well attended.

The Department attended the Town and school training retreat at the Safety Complex. Members assisted with the Seabrook Nuclear Power Plant drill which is an evacuation drill done annually in three parts, the last part will take place here next week.

Chief Williams reported the repairs to Engine 1, Forestry 1, Tanker 1 and the ladder testing issues have been completed and everything was in good running order.

June 9th will be a burn training on Manchester Road, which will be closed from 7 a.m. to 10 a.m.

The personal protective gear budgeted for 2019 has been ordered and will be gold, not black.

This weekend was cleanup at Station 2 and some trees were cut back. Mr. Leclair asked if they had removed the stage yet – no. Mr. Bedard asked about the LED sign which was not working. Chief Williams reported the sign has stopped working altogether and he had an estimate of $3,500 to repair it so they removed it instead. He felt it could be replaced in the future, and they would focus on the one at the Safety Complex.

New Business

Pingree Hill Fire Station – Woodpecker Control & Repair

Chief Williams provided an estimate from Critter Control to keep the woodpeckers from damaging Station 2. The estimate was for $1,153 including repainting which Chief Williams indicated could be done by the Department saving $180.00. Since pest control issues were not budgeted for, Mr. Leclair asked if the Department could find the $967.00 somewhere to get going on this and possibly be reimbursed from unexpended funds at the end of the year. Chief Williams agreed to that approach.

Mr. Leclair asked if the vendor indicated the bees were attracting the woodpeckers. Chief Williams advised the vendor noted the proximity of the wetlands was likely the cause.

Citizen Request – Haven Drive

Mr. Herman provided the Board with a copy of an email dated May 6, 2019 from Carol Cloutier a resident of Haven Drive, which is privately owned, requesting a temporary sign at the top of Haven'Rattlesnake Road that says, "Not a Thru Way" and potentially the reduction of the speed limit from 35 mph to 25 mph. As reason for the request Mrs. Cloutier noted cars and delivery trucks believing it to be a throughway are directed by their GPS devices because "Google directions" does not know the road is not open yet. Mrs. Cloutier indicated many of these drivers speed through then slam on their brakes in frustration, with children playing nearby and some stop at her home to ask for directions.

Mr. Eaton and Mr. Leclair indicated changing the speed limit on the road wasn't on the table.

Road Agent Dross indicated he may have some signs at the shop and the Board left it to his discretion which sign would be suitable. Mr. Herman will notify Mrs. Cloutier of the Board's decision.

NH Department of Revenue Administration – Cyclical Revaluation Report

Mr. Herman provided the Board with a letter dated May 8, 2019 from the State of New Hampshire Department of Revenue Administration regarding Auburn's cyclical revaluation done in 2018. The DRA is responsible to monitor and ensure compliance with the revaluation contracts. The letter indicates receipt of required reporting in compliance with deadlines. The next revaluation will be in 2023.

Mr. Eaton noted in accordance with the DRA letter, the median assessment level in the 2017 DRA Equalization Study was 85.70, the 2018 Study resulted in a median ratio of 99.70 and represent an improvement over the prior indicators of assessment level and equity.

US EPA – MS4 General Permit for Stormwater Discharges

Mr. Herman provided the Board with a copy of an email letter from the United States Environmental Protection Agency dated May 14, 2019 concerning National Pollutant Discharge Elimination System (NPDES) Permit identified for the Town of Auburn. Mr. Herman explained this concerned stormwater discharge. The US EPA indicated review and completion of the

Notice of Intent (NOI) for coverage (MS4). The Town's first annual report is due by September 30, 2019 for the reporting period ending June 30, 2019.

Mr. Herman recommended putting best management practices to follow on the Town's website and in the Auburn Village Crier as part of the Town's compliance with the MS4 requirements.

Appoint Duck Race Committee 2019

Mr. Herman provided the Board with a list of volunteers for the 2019 Duck Race Committee noting that Mr. Carpenter has requested the named volunteers be appointed for a term of April 1, 2019 through October 1, 2019.

Mr. Eaton noted this was to ensure the volunteers would be covered by the Town's liability insurance for the event.

Mr. Bedard moved to appoint Susan Anderson, Daniel Carpenter, David Rogers, Wendy Smith, Pat Clement and Lynn Bouchard as volunteers to comprise the Duck Race Committee for the term of April 1 through October 1, 2019. Mr. Leclair seconded the motion, with all in favor, the motion passed unanimously.

Potential of Need for Tax Anticipation Note (TAN) in 2019

Mr. Herman provided the Board with a copy of a Memo dated May 10, 2019 concerning the potential need for a Tax Anticipation Note (TAN) in 2019. The Town may experience a cash flow shortage later in the year that could necessitate the need to borrow money in anticipation of tax payments to come. Mr. Herman indicated this is the result of increased operating budgets for both the Town and the School which included the first full year's payment of principal and interest on the bond for the Auburn Village School renovation. The concern is that the first issue property tax bill will be sent at one-half of the prior year's tax rate. The funds to cover the additional appropriations approved by the voters will not be addressed until the 2019 tax rate is set and the second issue tax bills go out in October/November. But expenses at the higher rate begin in July.

Mr. Herman noted the Town is responsible to pay its bills, including the school district and the county, whether the taxes have been collected or not. He indicated if a TAN was needed, it would go out to bid and could be processed within 10 days. It would be paid by the end of the fiscal year.

Mr. Herman provided a copy of the publication to go into the Town Crier and also be posted on the Town website, at the Tax Collector's recommendation, to remind taxpayers of the anticipated tax rate increase in the second bill and how they can prepay small amounts prior to the end of the year to lessen the impact at year's end. Any funds that come in early like these would help the cash flow concerns outlined above.

Old Business

Proposal for Addition to Police Department

Mr. Herman provided the Board with a Memo dated May 17, 2019 concerning the Design and Construction Drawings Proposal for the Auburn Police Station addition and renovation. Alternative Designs, Inc. of Manchester provided an estimate for the design work and construction drawings.

Chief Pelton noted Alternative Designs were giving the Town a considerable break on the design work at $3,200, which normally would cost more. The structural engineer would determine if the trusses could support the roof which would overlay the existing roof. The plans would require an engineering stamp. Mr. Bedard asked if there were an expiration date to the quote. Mr. Eaton indicated it would be good for a while. Mr. Leclair asked if there were any lead time for the drawings to be done – no but believes a couple of weeks.

Mr. Bedard moved to approve and accept the proposal for design and construction drawings for the Auburn Police Department addition and renovation submitted by Alternative Designs, Inc., of Manchester totaling $3,200, to authorize the Town Administrator to execute the agreement, and further to authorize the withdrawal of $3,200 from the Town Buildings Restoration Capital Reserve Fund for this purpose. Mr. Leclair seconded the motion, with all in favor, the motion passed unanimously.

NH DES – Groundwater Management Permit

Mr. Herman provided the Board with a copy of the NH DES email letter dated May 15, 2019 concerning the Auburn Landfill on Chester Turnpike. NH DES acknowledged reviewing the Data Transmittal for the former Town landfill and found the results to e consistent with historic and overall trends.

Mr. Eaton asked about the notation in the last paragraph of Page 2 which indicated the Groundwater Data Submittal was not submitted until April 2, 2019; permit condition #7 requires monitoring results submitted no later than 45 days after sampling. Mr. Herman will check on this.

Citizen Petition for Warrant Article – Solar Energy Systems Property Tax Exemption

Mr. Herman provided a copy of the Petition for Warrant Article submitted to the Town by 25 citizens *"To see if the Town will vote to adopt the provisions of RSA 72:61 through RSA 72:72 inclusively, which provide for an optional property tax exemption from the property's assessed value, for property tax purposes, for persons owning real property, which is equipped with solar energy systems, wind-powered energy systems or woodheating energy systems intended for use at the immediate site. Such property tax exemption shall be in the amount equal to 100% of the assessed value of qualifying equipment under these statutes."*

Mr. Herman noted the Supervisors of the Checklist have verified 24 of the 25 names are registered voters and residents as required, with the last name potentially a nickname, in the process of being verified. Currently there are 44 properties in Town with solar at an estimated valuation of $945,000 (.02 cents).

Mr. Eaton expressed concerns if the exemption were used by a commercial owner to put in a large solar field. Mr. Bedard agreed there should be discussion. The petition includes woodstoves and boilers and is not just solar panels. Mr. Herman expressed concerns the article should be three separate articles, one each for solar, wind and wood.

Property Tax Exemptions and Tax Credits – 2018

Mr. Herman provided a breakdown of the current property tax exemptions and credits offered by the Town during FY 2018 and their tax impacts which combined resulted in a 27-cent impact on the tax rate.

Mr. Herman noted one (1) Improvements to Assist the Deaf (Tax Exemption) $174,000; five (5) Discretionary Preservation Easements (Tax Exemption) $35,000; one (1) Blind Exemption $50,000; twenty-three (23) Elderly Exemptions $4,156,000 (.08 cents); ten (10) Disabled Exemptions $500,000 (.01 cents); 270 Veteran's Tax Credits,$135,000 (.16 cents); and twenty (20) Service Connected Total Disability Credits $40,000 (<.01 cents).

Mr. Leclair noted the credit figures may be off as the disability credit is one-fourth of the veteran's credit. Mr. Herman will check the figures.

Mr. Herman explained an exemption impacts the overall assessed value of the property whereas a credit is a specified amount of money that is directly off the property tax bill.

Report/Comments of Ex-Officio Board Representatives

Mr. Bedard / Parks & Recreation Committee

Mr. Bedard noted dedication of Circle of Fun, concerts and Old Home Days were discussed as well as the lights at Wayne Eddows fields. Mr. Bedard reached out and may be able to get the poles and installation donated. The Millennium Running event is looking for town wide involvement.

Mr. Leclair / Planning Board

Mr. Leclair noted the Planning Board met and discussed senior housing. Dan Tatem would like to invite builders to provide input on the ordinance that is viable. The development off Dearborn Road is crushing stone close to the property line and the Board would like to contact the builder to see if they could move it.

Mr. Eaton / Highway Safety Committee

Mr. Eaton noted Highway Safety met and discussed Dartmouth Drive, Spofford Road, the Police report and new grants would be available Memorial to Labor Day. The sign at the school is being brought in and out by the janitor to keep cars from entering during school drop off and pick up times.

Other Business

Road Agent Dross indicated work had be done on Neal Avenue, Orchid Drive and Allen Avenue by Manchester Water Works. He indicated he would look to overlay those roads and other side streets next year. He also reported the drain was put in on Dartmouth and the items that were dumped were removed. Police & Fire will have keys to the gate that will be installed on Dartmouth Drive.

Next Meetings/Events

Monday, June 3, 2019 – Board of Selectmen's Meeting – 7 PM

Tuesday, June 11, 2019 - Joint Meeting with School Board – at Auburn Village School – 6 PM

Minutes

- May 6, 2019 – Site Walk Meeting at Pingree Fire Station

Mr. Bedard motioned to approve the May 6, 2019 Site Walk Meeting Minutes, as written. Mr. Leclair seconded the motion, with all in favor, the motion passed unanimously.

- May 6, 2019 Public Meeting

Mr. Bedard motioned to approve the May 6, 2019 Public Meeting Minutes, as written. Mr. Leclair seconded the motion, with all in favor, the motion passed unanimously.

Non-Public Session – RSA 91-A: 3, II (a) Consideration of the compensation of a public employee

Mr. Leclair moved to go into Non-Public Session pursuant to RSA 91-A: 3 II (a) consideration of the compensation of a public employee. Mr. Bedard seconded the motion. A roll call vote was taken: Mr. Eaton – yes; Mr. Leclair – yes; Mr. Bedard – yes. All were in favor, the motion passed unanimously.

The meeting room was closed to the public at 8:17 pm.

Mr. Herman provided a Memo dated May 20, 2019 concerning the employment anniversary of the Town Clerk, Kathleen Sylvia who will be marking the beginning of her 19th year of employment with the Town of Auburn on May 31st.

As both positions of Town Clerk and Tax Collector are elected positions without a direct supervisor, for the purpose of annual step increases, the employment anniversary is utilized by the Board of Selectmen for consideration of a step increase if one is included in the operating budget.

Mr. Herman noted Mrs. Sylvia is currently at Labor Grade 12, Step 8 earning $57,683.08 per year. If a step increase is approved, it would advance Mrs. Sylvia to a Labor Grade 12, Step 9 with an annual wage of $58,829.94.

The Board noted Mrs. Sylvia ran things smoothly, was well liked and does a good job.

Mr. Leclair moved to come out of non-public session at 8:22 pm. Mr. Bedard seconded the motion, with all in favor, the motion passed unanimously.

The meeting room was re-opened to the public at 8:22 pm.

Mr. Bedard moved to approve a step increase for the Town Clerk from a Labor Grade 12, Step 8 to a Labor Grade 12, Step 9 upon the individual's May 31, 2019 anniversary date. Mr. Eaton seconded the motion, with all in favor, the motion passed unanimously.

Adjourn

Mr. Leclair motioned to adjourn the meeting at 8:23 pm. Mr. Bedard seconded the motion, with all in favor, the motion passed unanimously.

Respectfully submitted,

Nancy J. Hoijer,
Recording Secretary