Town of Auburn
Board of Selectmen
Town Hall
February 22, 2021
7:00 P.M.

( ) Call to Order – Pledge of Allegiance

- Approval of Accounts Payable Manifest for the week of 2/22/21 $_____
- Approval of Payroll Manifest for the week of 2/15/21 $48,242.63
- Approval of Consent Agenda

( ) Appointments with the Board

- Consolidated Communications

( ) Town Response to Covid-19 and State Emergency Declaration

- General Update on Town Issues

( ) New Business

- 2020 Encumbered Funds
- 2019 Audited Financials
- Liberty Wood Surety Reduction
- 11 Rockingham Road Surety Reduction
- Municipal Building LED Upgrade – Information
- Landfill groundwater monitoring – Stantec proposal
- Potential Increased State and Federal Revenues – Information

( ) Old Business

- Street Light Repairs
- Safety Complex insulation
- CAI Agreement
- Town Hall parking lights

( ) Reports/ Comments of Ex-officio Board Representatives

- Budget, Highway Safety, Parks & Rec, Planning Board

( ) Other Business

( ) Next Meetings / Events

- Monday March 8, 2021 Board of Selectmen's Meeting – 7 P.M.
- Tuesday March 9, 2021 Town Election – 7 A.M. – 7 P.M.
- Monday March 22, 2021 Board of Selectmen's Meeting – 7 P.M.

( ) **Minutes**

- February 8, 2021 – Public Meeting
- February 8, 2021 – Non-Public Meeting

( ) **Non-Public Session pursuant to RSA 91-A:3, II (a & c)**

Compensation of a public employee(s) and Reputation of someone other than a member of the board.

MEMO

Date: February 22, 2020

To: Board of Selectmen

From: Adele A. Frisella
Finance Director

Re: 2020 Encumbered Amounts

This is to verify encumbered amounts from this past year end of December 31, 2020. These amounts represent expenditures not made before the end of 2020, but the projects had been agreed to in 2020, or prior. Griffin Mill Bridge is not anticipated to begin until July of 2022 or 2023 with $109,465.50 encumbered for 2020. The amount of $1,940.00 to encumber for preservation of records by Kofile that were ordered in 2020 but will not be complete until 2021. The library consultant has been retained, but the work will be completed in 2021 at $10,000 along with the remaining contract for the engineering firm of $1,298. This totals $11,298 to be encumbered.

$109,465.50	Road Recon/Griffin Bridge	01-4909-9-930-0
1,940.00	Records Preservation	01-4140-6-620-2
11,298.00	Library Building Review	01-4901-9-910-0
$122,703.50		

February 18, 2021

Mr. Keith Leclair, Chairman
Town of Auburn
Board of Selectmen
47 Chester Road
Auburn, NH 03032

Re: Liberty Woods Subdivision
Freedom Lane, Tax Map 8, Lot 42
Surety Reduction

Dear Mr. Leclair:

On February 17, 2021, the Planning Board voted to recommend The Board of Selectmen approve the reduction of surety currently held by the Town of Auburn in the amount of $175,890.00. The recommendation is to reduce it by $103,510.00 leaving a balance of $72,380.00. This remaining surety is for the roadway improvements as noted in the attached Roadway Improvements Surety Estimate Worksheet, dated December 15, 2020 of which is attached hereto. Stantec's recommendation letter dated December 15, 2020 is attached hereto for your review.

Thank you for your attention to this matter. Please feel free to contact me with any questions.

Sincerely,

Denise Royce

Denise Royce
Land Use Administrator

cc: Auburn Planning Board

Stantec

December 15, 2020
File: 195113213

Mr. Ron Poltak, Chairman
Office of the Planning Board
P.O. Box 309, 47 Chester Road
Auburn, NH 03032-0309

Dear Mr. Poltak:

Reference: Auburn, NH
Liberty Woods - Certificate of Occupancy Issuance Recommendation & Roadway Improvements Surety Reduction Recommendation

At the request of the Town, we visited the subject site to view the remaining work items on December 11, 2020. The roadway has been constructed to binder course pavement and the drainage infrastructure has been installed and is functioning as intended. The safety-related work items such as signage and the fire cistern have also been installed. The fire cistern flow test and the leak test were performed successfully (see the attached correspondence from the Fire Chief) and the Knox lock has been installed. Considering this, we take no exception to the issuance of certificates of occupancy for the subject project. Lastly, we recommend that the current roadway improvements surety being held by the Town be reduced from $175,890 to $72,380, as noted in the attached Roadway Improvements Surety Estimate Worksheet, dated December 15, 2020.

Please call if you have any questions.
Sincerely,

STANTEC CONSULTING SERVICES INC.

J. Daniel Tatem
Senior Associate
Stantec
5 Dartmouth Drive, Suite 200
Auburn, NH 03032-3984
Phone: (603) 206-7539
Cell: (603) 218-9739
Fax: (603) 669-7636
dan.tatem@stantec.com

Attachment: Fire Dept. Cistern email
Roadway Improvements Surety Estimate Worksheet

c. Carrie Cote, Denise Royce, Town of Auburn
Keith Martel, Owner

V:\1951\active\195113213\correspondence\letters\let_Poltak Liberty Woods CO and Surety Recommendations 12.20.doc

Tatem, Dan

From: Mike Williams <mwilliams@auburnnhfire.org>
Sent: Wednesday, December 2, 2020 10:52 AM
To: Tatem, Dan; Carrie Rouleau-Cote
Subject: Freedom Lane Fire Cistern

Good morning,

Today we flow tested the cistern on freedom lane and it flowed 1045 gallons per minute. As far as Auburn fire is concerned this cistern has passed our flow testing requirement, Has a Knox lock been ordered for this cistern?

Michael Williams
Chief Of Department
Auburn Fire Rescue
603-661-5762
mwilliams@auburnnhfire.org

TOWN OF AUBURN, NEW HAMPSHIRE
ROADWAY IMPROVEMENTS SURETY ESTIMATE WORKSHEET

Tax Map 8 / Lot 42

Name of Project: Liberty Woods Subdivision
Liberty Lane - Sta. 0+00 to 25+36
Total Road Length - 2,536 lf

Date: December 15, 2020

ITEM	QUANTITY	MEASURE	UNIT PRICE	TOTAL PRICE
1 Site Work				
a Erosion Control (Silt Fence, Stump Grindings)	3,330	L.F.	$1.00	$3,330.00
2 Paving				
a 1" Finish Course Pavement	342	TON	$85.00	$29,070.00
b Prep & Tack Coat	6,000	S.Y.	$0.50	$3,000.00
c Gravel Shoulders	60	C.Y	$40.00	$2,400.00
3 Drainage Work				
a Clean Catch Basin/SMH Sumps (shallow)	14	EA.	$100.00	$1,400.00
b Catch Basin Silt Sacks	11	EA.	$200.00	$2,200.00
4 On-site Improvements				
a Loam & Seed	1,500	S.Y.	$4.00	$6,000.00
b Fire Cistern loam & Seed & Misc.	1	L.S.	$500.00	$500.00
5 Miscellaneous				
a Granite Bounds	62	EA.	$200.00	$12,400.00
b As-built plans	3	Sheets	$1,000.00	$3,000.00
c Deeds or Agreements	1	L.S.	$2,500.00	$2,500.00
			SUBTOTAL:	$65,800.00
6 Contingencies (10% of Subtotal)				$6,580.00
			TOTAL:	$72,380.00

PLANNING BOARD
TOWN OF AUBURN

TOWN OF AUBURN

February 18, 2021

Mr. Keith Leclair, Chairman
Town of Auburn
Board of Selectmen
47 Chester Road
Auburn, NH 03032

Re: 11 Rockingham Road
Tax Map 31, Lot 19
Surety Reduction Recommendation

Dear Mr. Leclair:

On February 17, 2021, the Planning Board voted to recommend The Board of Selectmen approve the reduction of surety currently held by the Town of Auburn in the amount of $13,589.40. The recommendation is to reduce it by $10,089.40 leaving a balance of $3,500.00. This remaining surety is for the remaining work items listed in Stantec's letter dated February 5, 2021. Stantec will revisit the site again before they will recommend the final release of the remaining surety. A copy of Stantec's recommendation letter is attached hereto for your review.

Thank you for your attention to this matter. Please feel free to contact me with any questions.

Sincerely,

Denise Royce

Denise Royce
Land Use Administrator

cc: Auburn Planning Board

PO Box 309 • Auburn, NH 03032-0309
SELECTMEN: (603) 483-5052 • TOWN CLERK/TAX COLLECTOR: (603) 483-2281
BUILDING/ZONING: (603) 483-0516 • PLANNING: (603) 483-0799 • FAX: (603) 483-0518

Stantec

February 5, 2021
File: 195113283

Attention: Mr. Ron Poltak, Chairman
Office of the Planning Board
P.O. Box 309, 47 Chester Road
Auburn, NH 03032-0309

Dear Mr. Poltak,

Reference: Auburn, NH
Kenney Site Plan
Remaining Work List, Surety Reduction and As-Built Review #1

At the request of the Building Department, we visited the subject site on January 21, 2021 to view the completion of the site work and review the as-built plan. The as-built plan was prepared by Joseph M. Wichert, LLS, Inc., dated December 14, 2020, and updated January 15, 2021. Below is a list of remaining work items and as-built plan review comments.

Remaining Work Items:

1. After the site is fully stabilized, all temporary erosion control measures must be removed.

As-Built Plan Review Comments:

1. The mailboxes are not shown in the correct location and must reflect the as-built location.
2. The outdoor light fixture for the mailboxes must be added to the plan.
3. The fire lane pavement markings must be added to the plan.
4. The "No Parking" signs must be added to the plan.

We recommend that the current surety being held by the Town be reduced from $13,589.40 to $3,500. In addition, we do not recommend any further release of surety until both the last work item is completed and the as-built plans comments are addressed and an amended, as-built plan is provided.

Reference: Auburn, NH
Kenney Site Plan
Remaining Work List, Surety Reduction and As-Built Review #1

Please call if you have any questions.

Sincerely,

STANTEC CONSULTING SERVICES INC.

J. Daniel Tatem
Senior Associate
Phone: (603) 669-8672
Fax: (603) 669-7636
dan.tatem@stantec.com

c. Wayne Kenney, Developer
Denise Royce, Carrie Cote, Town of Auburn

Wayne E. Kenney Builders LLC
325 Kearney Circle
Manchester, NH 03104

August 5, 2020

Dear Auburn Planning Board,

I am writing in reference to the surety bond escrow held by the Town of Auburn for the work to be completed as part of site development of 11 Rockingham Road, Auburn NH.

As you are probably aware, all the items on the surety estimate prepared in December 2018 have been completed except the planting of the arborvitaes. As previously discussed with members of the Auburn Planning Board, taking down the row of trees was necessary due to the damage incurred when the fire department burned the former structure as a training exercise. When making that decision to take them down I thought I was complying with what was approved on the plan which stated "In the event that the existing trees get damaged during construction there was an alternate landscaping package that would be installed". I thought I was doing the right thing but, I guess I misunderstood that initial discussion at the planning board meeting.

I have been by the development several times and I think that it looks great with the landscaping that was installed and the development in a whole. Also, I do not believe there have been any complaints about the place being unsightly but I have had compliments on how well it came out. And I know that all the owners are very happy with how everything turned out.

Thank you for your consideration in resolving this final matter for site compliance.

Thanks,

Wayne Kenney

affinity led lighting

Town of Auburn New Hampshire

Comprehensive Municipal Building LED Lighting Upgrade Project

CLIQ connected

AMERICAN BUILT

ASSEMBLED WITH PRIDE BY US VETERANS IN DOVER, NEW HAMPSHIRE

affinity led lighting

Town of Auburn New Hampshire

AFFINITY APPROACH

Turn-key service

- Comprehensive energy & costing model
- Utility incentive paperwork
- Installation
- Programming of smart lighting
- Safe disposal of all waste

CLIQ connected

AMERICAN BUILT

ASSEMBLED WITH PRIDE BY US VETERANS IN DOVER, NEW HAMPSHIRE

affinity led lighting

Town of Auburn New Hampshire

AMERICAN BUILT

CLIQ Connected – Intelligent LED Luminaires

- Onboard computers in each light allow you to “set it and forget it” – your energy savings are on autopilot
- Controlled through smartphone app or wireless wall switch
- Daylight harvesting lets the sun do the work
- Occupancy sensors on each light “squeeze the sponge” for additional savings
- High-end trim – we program each CLIQ to cap at a 70%
  - Over time, the output of any light decreases
  - In 10 years CLIQ lights can be brightened to 80% to protect the quality of your investment

CLIQ connected

AMERICAN BUILT

ASSEMBLED WITH PRIDE BY US VETERANS IN DOVER, NEW HAMPSHIRE

affinity led lighting

Town of Auburn New Hampshire

PROJECT SUMMARY

Retrofit vs New Construction

Retrofit

- One-for-one replacement of lights with LEDs of the same form-factor
- Upgrades the quality of light
- Carries high dollar value of incentive awards
- Self-funding through savings on energy bills

New Construction

- Upgrades the quality of light by replacing old lights with new form factors
- Increases the quantity of lights in a space
- Carries lower dollar value of incentive awards
- Capital improvement project (not self-funding)

CLIQ connected

American Built

Assembled with Pride by US Veterans in Dover, New Hampshire

affinity led lighting

Town of Auburn New Hampshire

FINANCIAL SUMMARY

RETROFIT FINANCIAL SUMMARY

	PROJECT COST	ESTIMATED INCENTIVES	PROJECT NET	ANNUAL SAVINGS	SIMPLE PAYBACK (YRS)
Town Hall	$16,661	$3,640	$13,021	($3,447)	3.78
Library - Retrofit	$643	$110	$533	($241)	2.21
Public Safety Building - Retrofit	$19,304	$5,205	$14,099	($4,705)	3.00
Pingree Station - Retrofit	$5,961	$975	$4,986	($484)	10.31
Totals	**$42,568**	**$9,930**	**$32,638**	**($8,877)**	**3.68**

NEW CONSTRUCTION FINANCIAL SUMMARY

	PROJECT COST	ESTIMATED INCENTIVES	PROJECT NET	ANNUAL COST
Library - New Construction	$7,070	$200	$6,870	$76
Public Safety Building - New Construction	$16,169	$2,400	$13,769	$1,412
Pingree Station - New Constuction	$16,593	$3,000	$13,593	$415
Totals	**$39,832**	**$5,600**	**$34,232**	**$1,903**

COMBINED RETROFIT & NEW CONSTRUCTION SUMMARY

	PROJECT COST	ESTIMATED INCENTIVES	PROJECT NET	NET ANNUAL SAVINGS
Totals	**$82,400**	**$15,530**	**$66,870**	**($6,974)**

CLIQ connected

AMERICAN BUILT

ASSEMBLED WITH PRIDE BY US VETERANS IN DOVER, NEW HAMPSHIRE

affinity led lighting

Town of Auburn New Hampshire

LEADING EDGE EFFICIENCY SMART LIGHTING

	Standard*	Premium*		"Elite"
	DLC QPL LISTED	DLC QPL LISTED PREMIUM		CLIQ connected
Troffers & Retrofit Kits	100 LPW	125 LPW	+17.6%	147 LPW
Linear Ambient	105 LPW	130 LPW	+13.1%	147 LPW

33% of retrofit projects

* minimum technical requirements for lumens per watt (LPW)

CLIQ connected

AMERICAN BUILT

ASSEMBLED WITH PRIDE BY US VETERANS IN DOVER, NEW HAMPSHIRE

affinity led lighting

Town of Auburn New Hampshire

LEADING EDGE WARRANTY

	Standard*	Premium*	"Elite"
Warranty Period	5 Years	5 Years	7 Years

+2 Yrs

CLIQ connected

AMERICAN BUILT

ASSEMBLED WITH PRIDE BY US VETERANS IN DOVER, NEW HAMPSHIRE

2 Ft. CLIQ Utility Wraparound Elite

QUW2E-10W-XXKS (10W)
QUW2E-20W-XXKS (20W)

Product Description

CL*IQ* smart lighting's technology combines leading edge efficiency ambient lighting and intelligent programming solutions for any classroom, office, hallway or general area to be connected and controlled for high-end trimming, task tuning, occupancy sensing, daylight harvesting and dimmability.

CL*IQ*'s system is comprised of sensor equipped fixtures, bluetooth wireless enabled wall switches and a mobile app for customized commissioning of any space.

AMERICAN BUILT

ASSEMBLED WITH PRIDE BY US VETERANS IN DOVER, NEW HAMPSHIRE

Specifications

Type	2 Ft. Smart Wraparound
Watts	10W & 20W
Lm/W	> 145
CRI	> 83.0
Lamp Life	80,000
Voltage	100-277V

Final development & mold drawings pending

L(mm)	W(mm)	H(mm)
1200	600	89

Features

- Wireless control 0-100% dimming
- Daylight sensor
- Occupancy sensor
- Group control
- High-end trim

Fixture embedded sensors

Optimized light distribution

Simple Set Up

Download on the App Store

GET IT ON Google Play

Bluetooth

ELITE Leading Edge Efficiency
>145 lumens per watt

Extended Lumen Lifetime
> 80,000 hours

Excellent Color Rendering
> 83.0

2x2 CLIQ Troffer Retrofit Kit Elite

QTK22E-20W-XXKS (20W)
QTK22E-26W-XXKS (26W)

AMERICAN BUILT

ASSEMBLED WITH PRIDE BY US VETERANS IN DOVER, NEW HAMPSHIRE

Product Description

CL*IQ* smart lighting's technology combines leading edge efficiency ambient lighting and intelligent programming solutions for any classroom, office, hallway or general area to be connected and controlled for high-end trimming, occupancy sensing, daylight harvesting and dimmability.

CL*IQ*'s system is comprised of sensor equipped fixtures, bluetooth wireless enabled wall switches and a mobile app for customized commissioning of any space.

Specifications

Type	2X2 Smart Troffer Retrofit Kit
Watts	20W & 26W
Lm/W	> 145
CRI	> 83.0
Lamp Life	80,000
Voltage	100-277V

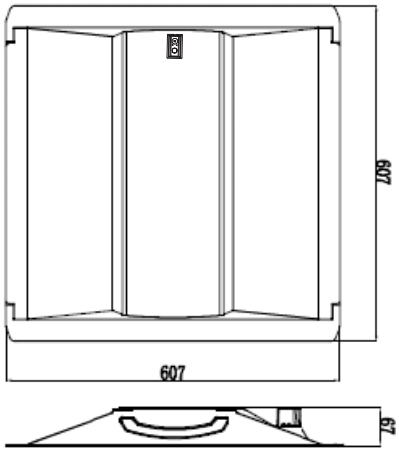

L(mm)	W(mm)	H(mm)
607	607	67

Features

Wireless control
0-100% dimming

Daylight sensor

Occupancy sensor

Group control

High-end trim

Fixture embedded sensors

Optimized light distribution

Simple Set Up

Download on the App Store

GET IT ON Google Play

Bluetooth

ELITE Leading Edge Efficiency
>145 lumens per watt

Extended Lumen Lifetime
> 80,000 hours

Excellent Color Rendering
> 83.0

2x2 CLIQ Troffer Retrofit Kit Elite

QTK22E-20W-XXKS (20W)
QTK22E-26W-XXKS (26W)

Installation Summary (full electrical installation instructions also provided)

1

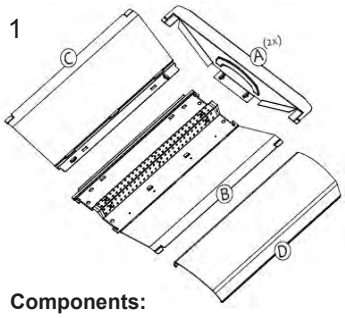

Components:

A. Side Panel
B. CL*IQ* System Panel
C. Closing Panel
D. Diffuser

2

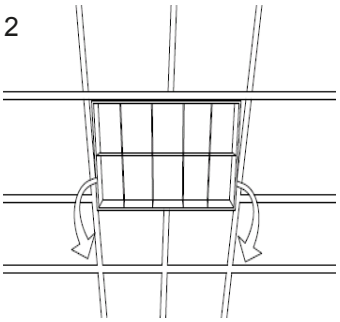

2.1 Disconnect or turn off power.
2.2 Remove original cover and tubes.

3

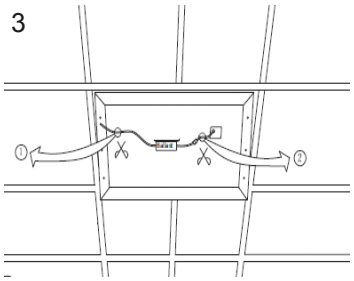

3.1 Cut off AC power wires
3.2 Cut off ballast wires and remove ballast, lampsholders and starters

4

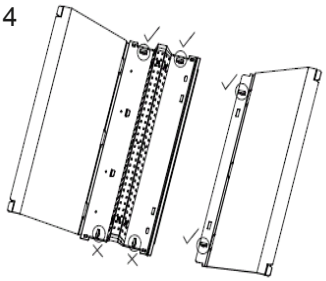

4.1 Insert 1/4-turn fasteners (6) to DMJ*R* System Panel and Closing Panel, in directions as indicated

5

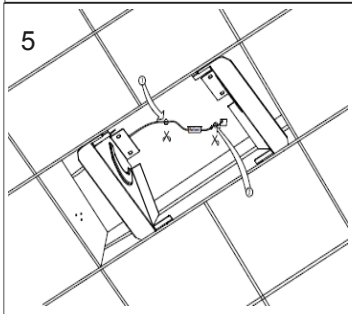

5.1 Install Side Panels (2) into original troffer housing

6

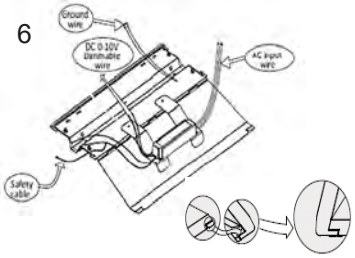

6.1 Place CL*IQ* System Panel into corner slots of the Side Panels and connect safety cable,Ground and AC input wires
6.2 Secure by turning each of the 1/4-turn fasteners (4)

7

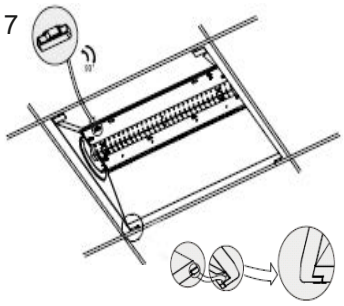

7.1 Place the Closing Panel into the remaining corner slots of the Side Panels and secure by turning the final 1/4-turn fasteners (2)

8

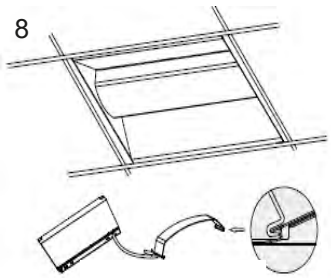

8.1 Press diffuser inward into place.
8.2 Reconnect or turn on the power.
8.3 DMJ*R* smart troffer retrofit kit is ready for use and APP setup

Performance Data

CL*IQ* Model Number	CCT	Lumens	Watts	LPW	Product ID
QTK22E-20W-35P	3500	2859	20	140	PL9A9I9D06LO
QTK22E-20W-40P	4000	2910	20	147	PLQ0QJK6D59E
QTK22E-20W-45P	4500	2910	20	147	PLGBI74V9LZG
QTK22E-20W-50P	5000	2910	20	147	PLAE1SIPLQL9
QTK22E-26W-35P	3500	3600	26	141	PLOLAV98Q6MP
QTK22E-26W-40P	4000	3750	26	147	PLGYEVX9WQ8
QTK22E-26W-45P	4500	3750	26	147	PLJBIOYZ2C3X
QTK22E-26W-50P	5000	3750	26	147	PLTWWEIRGG80

Certifications

LM79 LM80

For more information, please refer to www.affinityledlight.com

2x4 CLIQ Troffer Retrofit Kit Elite

QTK24E-26W-XXKS (26W)
QTK24E-40W-XXKS (40W)

AMERICAN BUILT

ASSEMBLED WITH PRIDE BY US VETERANS IN DOVER, NEW HAMPSHIRE

Product Description

CL*IQ* smart lighting's technology combines leading edge efficiency ambient lighting and intelligent programming solutions for any classroom, office, hallway or general area to be connected and controlled for high-end trimming, task tuning, occupancy sensing, daylight harvesting and dimmability.

CL*IQ*'s system is comprised of sensor equipped fixtures, bluetooth wireless enabled wall switches and a mobile app for customized commissioning of any space.

Specifications

Type	2X4 Smart Troffer Retrofit Kit
Watts	26W & 40W
Lm/W	> 147
CRI	> 83.0
Lamp Life	80,000
Voltage	100-277V

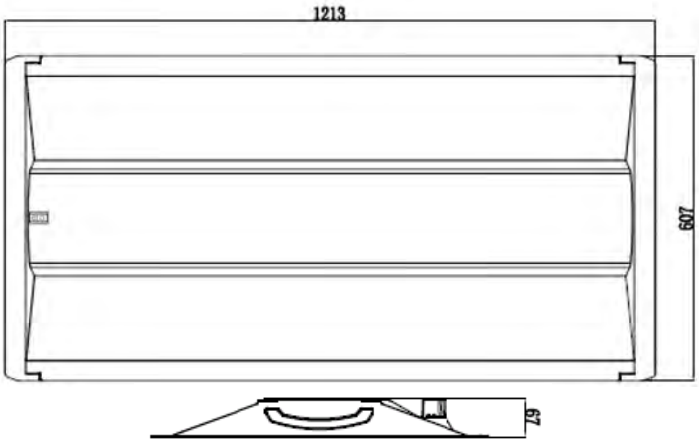

L(mm)	W(mm)	H(mm)
1213	607	67

Features

Wireless control 0-100% dimming

Daylight sensor

Occupancy sensor

Group control

High-end trim

Fixture embedded sensors

Optimized light distribution

Simple Set Up

Download on the App Store

GET IT ON Google Play

Bluetooth

ELITE Leading Edge Efficiency
>147 lumens per watt

Extended Lumen Lifetime
> 80,000 hours

Excellent Color Rendering
> 83.0

2x2 CLIQ Troffer Elite

QTR22E-26W-XXKS (20W)
QTR22E-20W-XXKS (26W)

Product Description

CL*IQ* smart lighting's technology combines leading edge efficiency ambient lighting and intelligent programming solutions for any classroom, office, hallway or general area to be connected and controlled for high-end trimming, task tuning, occupancy sensing, daylight harvesting and dimmability.

CL*IQ*'s system is comprised of sensor equipped fixtures, bluetooth wireless enabled wall switches and a mobile app for customized commissioning of any space.

Specifications

Type	2X2 Smart Troffer
Watts	20W & 26W
Lm/W	> 145
CRI	> 83.0
Lamp Life	80,000
Voltage	100-277V

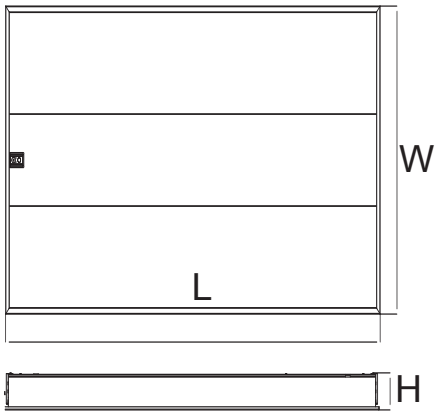

L(mm)	W(mm)	H(mm)
603	603	72

Features

Wireless control
0-100% dimming

Daylight sensor

Occupancy sensor

Group control

High-end trim

Fixture embedded sensors

Optimized light distribution

Simple Set Up

Download on the App Store

GET IT ON Google Play

Bluetooth

ELITE Leading Edge Efficiency
>145 lumens per watt

Extended Lumen Lifetime
> 80,000 hours

Excellent Color Rendering
> 83.0

2x2 CLIQ Troffer Elite

QTR22E-26W-XXKS (20W)
QTR22E-20W-XXKS (26W)

Installation Summary (full electrical installation instructions also provided)

1

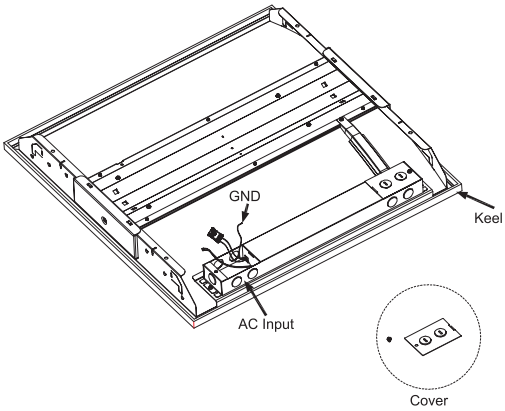

a. Disconnect or turn off the power.
b. Remove the AC input end cover.
c. Position the CL*IQ* smart troffer into the ceiling grid.

2

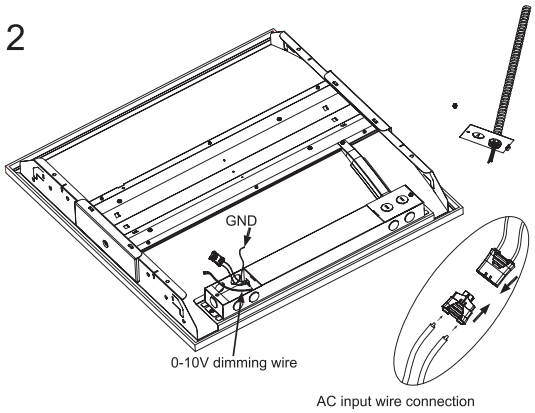

a. Install AC quick-connect and GND wires.
b. Optional: install 0-10V dimming wires.

3

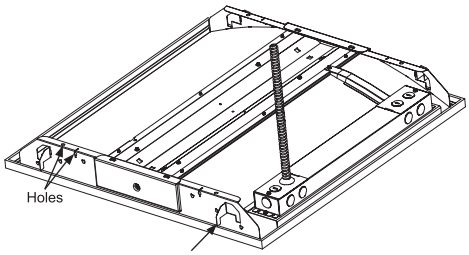

a. Attach safety cables/chains and earthquake clips to secure the troffer.

4

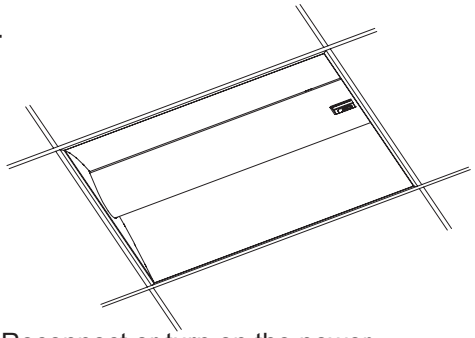

a. Reconnect or turn on the power.
b. CL*IQ* smart troffer is ready for APP setup.

Performance Data

CL*IQ* Model Number	CCT	Lumens	Watts	LPW
QTR22E-20W-35P	3500	2923	20	145
QTR22E-20W-40P	4000	2953	20	146
QTR22E-20W-45P	4500	2978	20	147
QTR22E-20W-50P	5000	3002	20	147
QTR22E-26W-35P	3500	3755	26	149
QTR22E-26W-40P	4000	3755	26	150
QTR22E-26W-45P	4500	3759	26	150
QTR22E-26W-50P	5000	3761	26	151

Certifications

LM79 LM80

2x4 CLIQ Troffer Elite

QTR24E-26W-XXKS (26W)
QTR24E-40W-XXKS (40W)

Product Description

CL*IQ* smart lighting's technology combines leading edge efficiency ambient lighting and intelligent programming solutions for any classroom, office, hallway or general area to be connected and controlled for high-end trimming, task tuning, occupancy sensing, daylight harvesting and dimmability.

CL*IQ*'s system is comprised of sensor equipped fixtures, bluetooth wireless enabled wall switches and a mobile app for customized commissioning of any space.

Specifications

Type	2X4 Smart Troffer
Watts	26W & 40W
Lm/W	> 145
CRI	> 83.0
Lamp Life	80,000
Voltage	100-277V

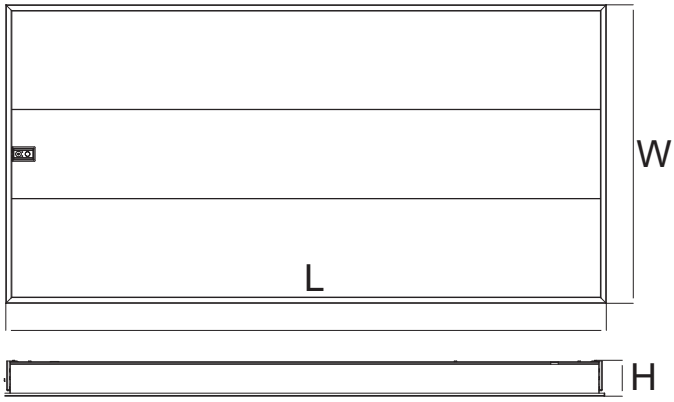

L(mm)	W(mm)	H(mm)
1213	603	72

Features

Wireless control
0-100% dimming

Daylight sensor

Occupancy sensor

Group control

High-end trim

Fixture embedded sensors

Optimized light distribution

Simple Set Up

Download on the App Store

GET IT ON Google Play

Bluetooth

ELITE Leading Edge Efficiency
>145 lumens per watt

Extended Lumen Lifetime
> 80,000 hours

Excellent Color Rendering
> 83.0

2x4 CLIQ Troffer Elite

QTR24E-26W-XXKS (26W)
QTR24E-40W-XXKS (40W)

Installation Summary (full electrical installation instructions also provided)

1

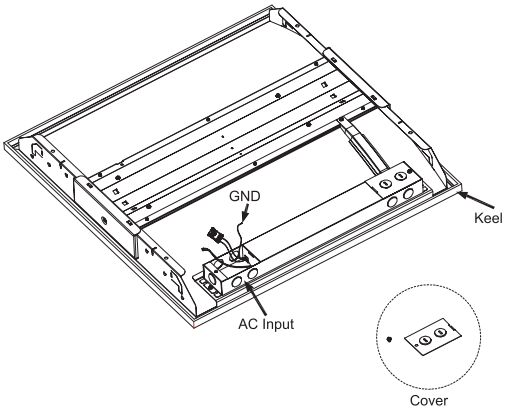

a. Disconnect or turn off the power.
b. Remove the AC input end cover.
c. Position the CL*IQ* smart troffer into the ceiling grid.

2

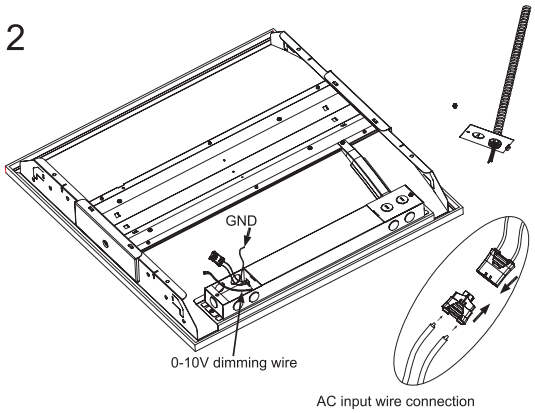

a. Install AC quick-connect and GND wires.
b. Optional: install 0-10V dimming wires.

3

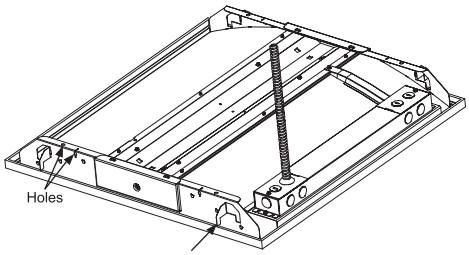

a. Attach safety cables/chains and earthquake clips to secure the troffer.

4

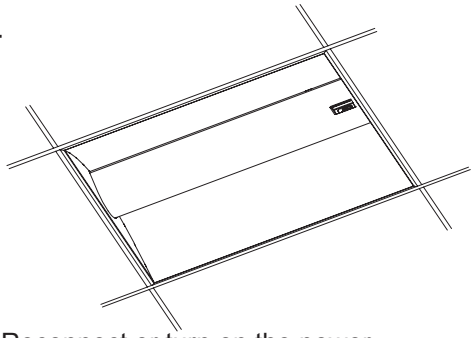

a. Reconnect or turn on the power.
b. CL*IQ* smart troffer is ready for APP setup.

Performance Data

CL*IQ* Model Number	CCT	Lumens	Watts	LPW
QTR24E-26W-35P	3500	3828	26	146
QTR24E-26W-40P	4000	3837	26	147
QTR24E-26W-45P	4500	3846	26	147
QTR24E-26W-50P	5000	3855	26	148
QTR24E-40W-35P	3500	5827	40	148
QTR24E-40W-40P	4000	5828	40	148
QTR24E-40W-45P	4500	5829	40	148
QTR24E-40W-50P	5000	5829	40	148

Certifications

LM79 LM80

2x4 CLIQ Troffer Retrofit Kit Elite

QTK24E-26W-XXKS (26W)
QTK24E-40W-XXKS (40W)

Installation Summary (full electrical installation instructions also provided)

1

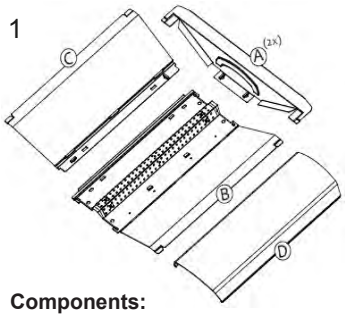

Components:

A. Side Panel
B. CL*IQ* System Panel
C. Closing Panel
D. Diffuser

2

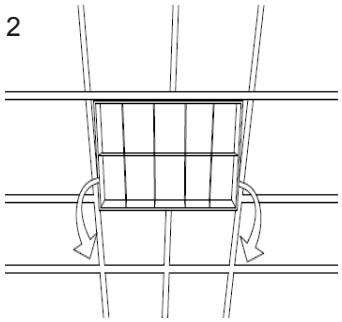

2.1 Disconnect or turn off power.
2.2 Remove original cover and tubes.

3

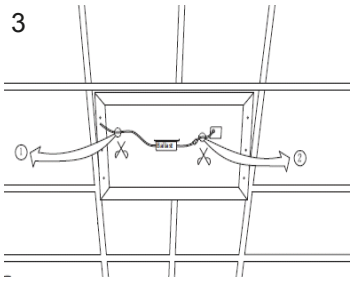

3.1 Cut off AC power wires
3.2 Cut off ballast wires and remove ballast, lampsholders and starters

4

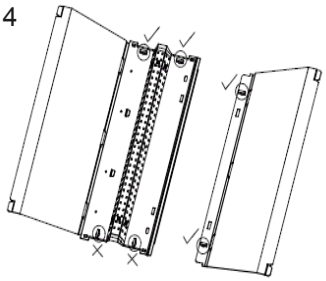

4.1 Insert 1/4-turn fasteners (6) to DMJ*R* System Panel and Closing Panel, in directions as indicated

5

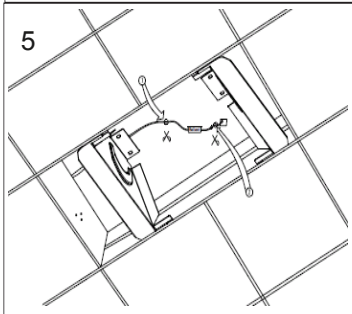

5.1 Install Side Panels (2) into original troffer housing

6

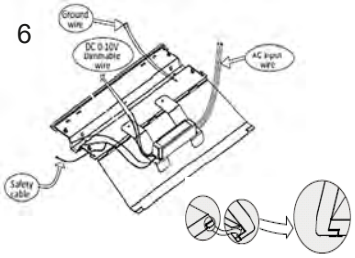

6.1 Place CL*IQ* System Panel into corner slots of the Side Panels and connect safety cable,Ground and AC input wires
6.2 Secure by turning each of the 1/4-turn fasteners (4)

7

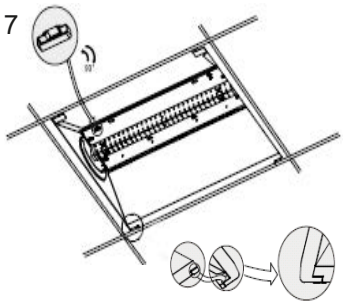

7.1 Place the Closing Panel into the remaining corner slots of the Side Panels and secure by turning the final 1/4-turn fasteners (2)

8

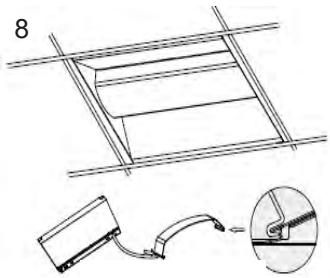

8.1 Press diffuser inward into place.
8.2 Reconnect or turn on the power.
8.3 DMJ*R* smart troffer retrofit kit is ready for use and APP setup

Performance Data

CL*IQ* Model Number	CCT	Lumens	Watts	LPW	Product ID
QTK24E-26W-35KS	3500	3620	26	140	PL38ZYW6OOP9
QTK24E-26W-40KS	4000	3750	26	147	PL8ZI9210X4O
QTK24E-26W-45KS	4500	3750	26	147	PLVICTPZSP5L
QTK24E-26W-50KS	5000	3750	26	147	PLPRXZLVSF2E
QTK24E-40W-35KS	3500	5750	40	144	PLG390NIXXP6
QTK24E-40W-40KS	4000	5900	40	147	PLXJF2DW2GUR
QTK24E-40W-45KS	4500	5900	40	147	PLXKJNRC0JUB
QTK24E-40W-50KS	5000	5900	40	147	PLUK62HLXXUP

Certifications

LM79 LM80

2 Ft. CLIQ Utility Wraparound Elite

QUW2E-10W-XXKS (10W)
QUW2E-20W-XXKS (20W)

Installation Summary (full electrical installation instructions also provided)

Final installation illustrations and instructions pending

Performance Data

CLIQ Model Number	CCT	Lumens	Watts	LPW
QUW2E-10W-35P	3500	1460	10	146
QUW2E-10W-40P	4000	1475	10	147
QUW2E-10W-45P	4500	1490	10	147
QUW2E-10W-50P	5000	1500	10	148
QUW2E-20W-35P	3500	2923	20	146
QUW2E-20W-40P	4000	2953	20	147
QUW2E-20W-45P	4500	2978	20	147
QUW2E-20W-50P	5000	3002	20	148

Certifications

LM79 LM80

CLIQ Utility Wraparound Elite

QUW4E-20W-XXKS (20W)
QUW4E-26W-XXKS (26W)
QUW4E-40W-XXKS (40W)

Product Description

CL*IQ* smart lighting's technology combines leading edge efficiency ambient lighting and intelligent programming solutions for any classroom, office, hallway or general area to be connected and controlled for high-end trimming, task tuning, occupancy sensing, daylight harvesting and dimmability. Mounting options include surface, cable-suspended and pipe-suspended.

CL*IQ*'s system is comprised of sensor equipped fixtures, bluetooth wireless enabled wall switches and a mobile app for customized commissioning of any space.

Specifications

Type	Utility Wrap
Watts	20W, 26W & 40W
Lm/W	147 Lm/W
CRI	83.0
Lamp Life	80,000
Voltage	100-277V

Model	L (mm)	W (mm)	H*(mm)
QUW4E	1197±1	144±1	70.5±1

*Height with sensor 70.5mm, without sensor 65.0mm

Features

Wireless control
0-100% dimming

Daylight sensor

Occupancy sensor

Group control

High-end trim

Fixture embedded sensors

Optimized light distribution

Simple Set Up

Download on the App Store

GET IT ON Google Play

Bluetooth

ELITE Leading Edge Efficiency
>145 lumens per watt

Extended Lumen Lifetime
> 80,000 hours

Excellent Color Rendering
> 83.0

4 Ft. CLIQ Utility Wraparound Elite

QUW4E-20W-XXKS (20W)
QUW4E-26W-XXKS (26W)
QUW4E-40W-XXKS (40W)

Installation Summary (full installation instructions for suspended-mounted fixtures provided seperately)

1. Mount fixture housing to surface with four (4) screws and anchors

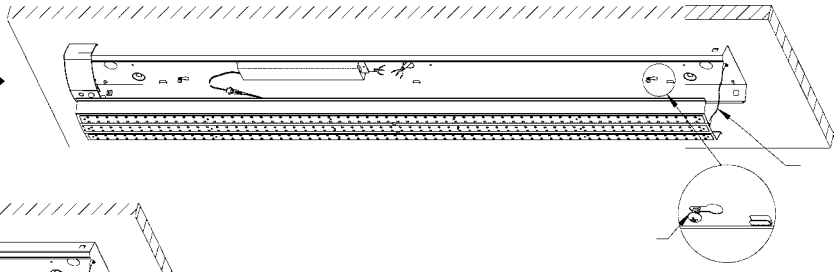

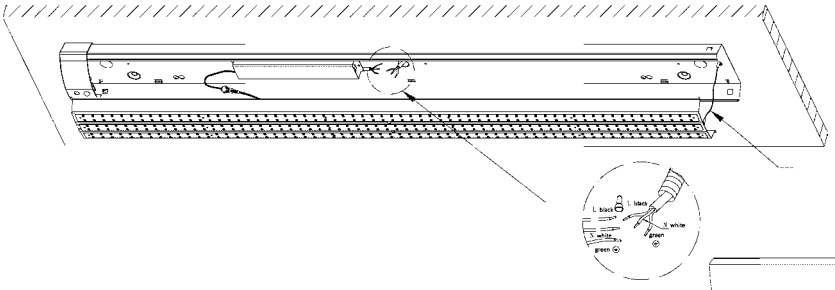

2. Connect the L (black), N (white) and GND (green) to the corresponding wires from junction box

3. Attach the light board to the fixture housing buckles

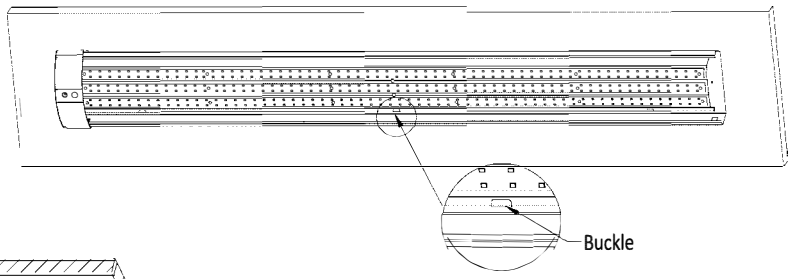

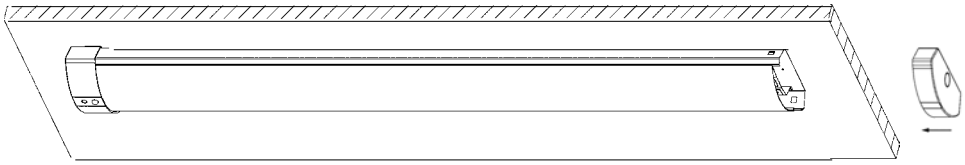

4. Affix the diffuser to the fixture housing and then attach the end cap to fixture housing

Performance Data

CLIQ Model Number	CCT	Lumens	Watts	LPW	Product ID
QUW4E-20W-35KS	3500	2800	20	140	PLTYMQPXHIHQ
QUW4E-20W-40KS	4000	2860	20	147	PL3YXZL8EICS
QUW4E-20W-45KS	4500	2860	20	147	PLC8QWWAAP88
QUW4E-20W-50KS	5000	2860	20	147	PL528Z2YLU2A
QUW4E-26W-35KS	3500	3650	26	143	PLC4C6ZZNVCM
QUW4E-26W-40KS	4000	3750	26	147	PLZFCGGD8GV1
QUW4E-26W-45KS	4500	3750	26	147	PL748HJJU6TM
QUW4E-26W-50KS	5000	3750	26	147	PL5A2YL8VUVY
QUW4E-40W-35KS	3500	5470	40	144	PLOAG3D4I36V
QUW4E-40W-40KS	4000	5570	40	147	PLEFKHEXHMWI
QUW4E-40W-45KS	4500	5570	40	147	PLA6XNLZI31W
QUW4E-40W-50KS	5000	5570	40	147	PLTFO7APPUVA

Certifications

LM79 LM80

For more information, please refer to www.affinityledlight.com

Town of Auburn

Town Hall
47 Chester Road
P.O. Box 309
Auburn, NH 03032

Town Administrator

William G. Herman, CPM
Phone: (603) 483-5052 Ext. 111
Fax: (603) 483-0518
E-Mail:
townadmin@townofauburnnh.com

To: Board of Selectmen

From: Bill Herman, CPM, Town Administrator
Date: February 11, 2021
Re: Landfill Monitoring Annual Report 2020 and Proposal for Landfill Monitoring Services in FY 2021

During the past week we have received from Stantec Consulting Services the report documenting the data from the 2020 groundwater sampling from the four original monitoring wells, two designated surface water sampling locations and the two new additional monitoring wells installed in 2020 on the Town's closed landfill property.

Two years ago, the NH Department of Environmental Services (NHDES) sought to have the testing expanded to include detection of PFCs, which had not previously been part of the monitoring testing. Auburn agreed to include that testing in their round of sampling since 2017, and which continued in 2020.

The attached summary results and submission to NHDES indicates that generally nothing has significantly changed since last year's test results. Further, they are recommending the same type of testing be conducted at the Auburn site in 2021 in accordance with the standards outlined in the Town's Groundwater Management Permit.

The full report with supporting data sheets is available at the Town Hall for review and inspection. We have only attached the summary report & submission with this cover memo.

In addition, Stantec has provided the attached proposal for the continued landfill monitoring and reporting work in 2021 as required by the NHDES Groundwater Management Permit. The estimated cost of $9,400 for the required work is within the Town's budgeted amount of $10,050 for landfill monitoring.

Should the Board be of the opinion to accept the Stantec proposal for 2021, the following motion would be in order:

Move to accept the proposal provided by Stantec Consulting Services, Inc. dated February 10, 2021 for 2021 GMP Monitoring Activities at the closed Auburn Landfill site and to authorize the Town Administrator to execute the proposal on behalf of the Town of Auburn.

Thank you for your consideration.

Attachments

DES Waste Management Division
29 Hazen Drive; PO Box 95
Concord, NH 03302-0095

2020 GROUNDWATER MONITORING PERIODIC SUMMARY REPORT
Auburn Landfill
Chester Turnpike
Auburn, NH 03032

NHDES Site #: 199002015
Project Type: Landfill Closure
Project Number: 1521

Prepared For:
Town of Auburn
47 Chester Road, P.O. Box 309
Auburn, NH 03032
Phone Number (603) 483-5052
RP Contact Name:
Board of Selectmen
RP Contact Email:
townadmin@townofauburnnh.com

Prepared By:
Stantec Consulting Services Inc.
5 Dartmouth Drive, Suite 200
Auburn, NH 03032
Phone Number: (603) 669-8672
Contact Name: David A. Allwine, P.G.
Contact Email: dave.allwine@stantec.com

Date of Report: February 9, 2021

Groundwater Monitoring Report Cover Sheet

Site Name: Auburn Landfill

Town: Auburn

Permit #: GWP-199002015-A-004

Type of Submittal (*Check all that apply*)

- ✓ Periodic Summary Report (*year*) : 2020
- ❑ Data Submittal (*month and year per Condition #7 of Permit*):

Check each box where the answer to any of the following questions is "YES"

Sampling Results

- ✓ During the most recent monitoring event, were any new compounds detected at any sampling point?
  Well/Compound: MW-101/PFOA & PFOS
- ❑ Are there any detections of contamination in drinking water that is untreated prior to use?
  Well/Compound:
  - □ Do compounds detected exceed AGQS?
- ❑ Was free product detected for the first time in any monitoring point?
  - □ Surface Water (*visible sheen*)
  - □ Groundwater (*1/8" or greater thickness*)
    Location/Thickness:

Contaminant Trends

- ✓ Do sampling results show an increasing concentration trend in any source area monitoring well?
  Well/Compound: MW-1, MW-2 & MW-4/PFOA
- ❑ Do sampling results indicate an AGQS violation in any of the GMZ boundary wells?
  Well/Compound:

Recommendations

- ✓ Does the report include any recommendations requiring DES action? (*Do not check this box if the only recommendation is to continue with existing permit conditions.*)

  - Add PFAS to GMP list of analytes for MW-101 and MW-102.

This form is to be completed for groundwater monitoring data submittals and periodic summary reports submitted to the New Hampshire Department of Environmental Services Waste Management Division.

Stantec Consulting Services Inc.
5 Dartmouth Drive, Suite 200, Auburn NH 03032

February 9, 2021
File: 191710504

Attention: Groundwater Management Permits Coordinator
New Hampshire Department of Environmental Services
29 Hazen Drive; PO Box 95
Concord, NH 03302-0095

Reference: 2020 Annual Summary Report
Auburn Landfill, Chester Turnpike, Auburn, NH
NHDES Site #199002015, Project #1521

Dear Sir or Madam,

On behalf of the Town of Auburn, Stantec Consulting Services Inc. (Stantec) is pleased to submit the 2020 Annual Summary Report for the above-referenced site (the "Site"). The Site's location is depicted on Figure 1. This report documents the results for the groundwater and surface water sampling conducted at the Site since submittal of the previous summary report in October 2019. The work described herein was completed in accordance with the Site's Groundwater Management Permit (GMP) No. GWP-199002015-A-004, which was issued on March 24, 2020.

BACKGROUND

From the 1940s until the 1970s, the Site was utilized as a municipal landfill for the Town of Auburn. An open burning dump area was also located at the Site until 1978, when an incinerator was constructed. From that time until 1998, the Site was utilized for recycling activities, ash disposal, burial of construction/demolition debris, and the burning of brush and slash. Since 1998, when the incinerator officially closed, the Site has operated as a transfer station under an agreement with Waste Management of New Hampshire.

In 1989, a *Hydrogeologic Study Report* was prepared by Hoyle, Tanner & Associates, Inc. (HTA) in response to a request from the New Hampshire Department of Environmental Services (NDHES). The investigation included determination of local bedrock and soil characteristics, groundwater flow and surface drainage patterns, and an evaluation of groundwater monitoring requirements. Results of a seismic refraction survey indicated that bedrock was present at a depth of approximately 20 feet to 50 feet below grade. Bedrock reportedly slopes down to the south and is overlain by glacial till and sand deposits. Seven observation wells were installed in test pits excavated throughout the Site. Gauging data collected from these wells and an existing dug well at the Site indicated that shallow groundwater flow was generally directed to the west-southwest towards Little Massabesic Lake. Based on this groundwater flow information, HTA proposed that four permanent monitoring wells be installed at the Site.

Reference: 2020 Annual Summary Report
Auburn Landfill, Chester Turnpike, Auburn, NH
NHDES Site #199002015, Project #1521

In December 1999, HTA installed the four monitoring wells as a part of the closure and capping of the ash and construction/demolition debris disposal areas. Monitoring well MW-1 was installed upgradient of the ash stockpile. Monitoring well MW-2 was installed downgradient of the ash stockpile, but upgradient of the construction and demolition debris disposal area. Monitoring well MW-3 was installed downgradient from the construction and demolition debris disposal area, but upgradient of the former open burning dump that was closed in 1978. Monitoring well MW-4 was installed downgradient of the former open burning dump. All four of these wells were installed as overburden monitoring points.

Sampling of these four monitoring wells, in addition to two surface water sampling locations, was first conducted on March 19, 2000. Samples were submitted for laboratory analysis of pH, chloride, nitrate, specific conductivity, dissolved Resource Conservation and Recovery Act (RCRA) 8 metals, and volatile organic compounds (VOCs). Results indicated the presence of arsenic, barium, chromium, lead, and/or mercury at concentrations exceeding their respective Ambient Groundwater Quality Standard (AGQS) in the monitoring wells. No other parameters were detected at concentrations above their respective AGQS in the samples. A second round of sampling conducted on July 6, 2001 did not indicate the presence of any of the analyzed parameters at concentrations above AGQS.

On August 31, 2001, HTA submitted a *Solid Waste Facility Phase II Hydrogeologic Study and a Groundwater Management Permit Application* to the NHDES. The first GMP, #GWP-199002015-A-001, was issued on November 27, 2002 and required the sampling of the Site's four monitoring wells (MW-1 through MW-4) and two surface water locations (SW-1 and SW-2) in April, July and November of each year. Analytical parameters included specific conductance, pH, nitrate, sulfate, total Kjeldahl nitrogen (TKN), chloride, iron, and manganese in April, July and November of each year; VOCs in April of each year; and drinking water metals in April 2003, April 2005, and April 2007.

On January 7, 2009, Stantec submitted a *Groundwater Management Permit Renewal Application* to the NHDES. The renewal application recommended that groundwater monitoring be reduced to twice per year. On March 12, 2010, GMP #GWP-199002015-A-002 was issued for the Site. This permit required sampling of the Site's four monitoring wells and two surface water locations in April and November of each year with analysis of specific conductance, pH, nitrate, sulfate, TKN, chloride, iron, manganese, and arsenic (for monitoring wells MW-1 and MW-3 only). In addition, analysis of the NHDES Full List of VOCs (including 1,4-dioxane) and drinking water metals was required in April 2011 and April 2014.

Reference: 2020 Annual Summary Report
Auburn Landfill, Chester Turnpike, Auburn, NH
NHDES Site #199002015, Project #1521

On February 11, 2015, Stantec submitted a *Groundwater Management Permit Renewal Application* to the NHDES. The renewal application recommended that groundwater monitoring continue with the program being performed at that time. On March 24, 2015, GMP #GWP-199002015-A-003 was issued for the Site. This permit requires sampling of the Site's four monitoring wells and two surface water locations in April of each year with analysis of specific conductance, pH, nitrate, sulfate, TKN, chloride, iron, and manganese. In addition, analysis of the NHDES Full List of VOCs (including 1,4-dioxane) and drinking water metals is required in April 2019. Groundwater sampling in general accordance with the GMP has been conducted since its issuance.

On December 3, 2019, Stantec submitted a *Groundwater Management Permit Renewal Application* to the NHDES. The renewal application recommended that groundwater monitoring continue with the program being performed at that time with the addition of sampling for per- and polyfluoroalkyl substances (PFAS) by USEPA Method 537.1. The GMP Application also recommended the installation of additional monitoring wells downgradient of the landfill. On March 24, 2020, GMP #GWP-199002015-A-004 was issued for the Site. This permit requires sampling of the Site's four monitoring wells and two surface water locations in April of each year with analysis of specific conductance, pH, nitrate, sulfate, TKN, chloride, iron, manganese, arsenic, and PFAS. In addition, analysis 1,4-dioxane in April 2020, the NHDES Full List of VOCs (including 1,4-dioxane) and drinking water metals is required in April 2024, and PFAS at 518 and 612 Raymond Road water supply wells in April 2024. Groundwater sampling in general accordance with the GMP has been conducted since its issuance.

On January 28, 2020 Stantec directed New England Boring of Derry New Hampshire to complete two soil borings as 2" PVC permanent monitoring wells at locations downgradient of the landfill and MW-4. The boring logs for the two installed monitoring wells, MW-101 and MW-102, are attached. The location of monitoring wells MW-101 and MW-102 are depicted on attached Figure 2.

CONCEPTUAL SITE MODEL

The Site, which is located at the northeast corner of the Chester Turnpike and Raymond Road intersection, is currently utilized as a transfer station for Town of Auburn municipal waste. The Site was formerly utilized for disposal of municipal waste, construction and demolition debris, and incinerator ash. The Site is situated in a rural area of northeastern Auburn. Residences are located to the south and east of the Site. The areas to the north and west of the Site are mostly undeveloped and wooded.

Reference: 2020 Annual Summary Report
Auburn Landfill, Chester Turnpike, Auburn, NH
NHDES Site #199002015, Project #1521

Based on their presence in groundwater at concentrations exceeding AGQS, arsenic, manganese, sulfate, and PFAS are the primary contaminants of concern (COCs) for the Site. The presence of these COCs may be attributable to the historical disposal of materials containing these COCs in the Site's former waste disposal areas. The approximate limits of the waste disposal areas are depicted on Figure 2. Infiltrating rainwater could have mobilized arsenic, manganese, sulfate, and PFAS from the waste materials and allowed these contaminants to migrate into groundwater.

Since arsenic and manganese are elemental contaminants, they cannot be degraded; they can only be dispersed or transformed. Dispersion would occur through migration of dissolved arsenic and manganese with the flow of groundwater. Transformation of arsenic and manganese between more or less mobile forms can be affected by redox potential. In addition, since these COCs are positively charged, they will be more likely to be bound to soils with higher cation exchange capacities (such as clays or organic materials).

Sulfate is a fully oxidized form of sulfur. Sulfate is stable under aerobic conditions but is reduced to bisulfide under anaerobic conditions. Sulfides generated from sulfate reduction can form low solubility metal-sulfide compounds that precipitate out of groundwater. Therefore, sulfate reduction may lower dissolved-phase metal concentrations.

Based on current and historical well gauging data, overburden groundwater flow is generally directed to the southwest. Depth to overburden groundwater is generally within 10 feet of ground surface, except in areas of landfilling where the surface grade has been raised. Overburden materials at the Site primarily consist of sand and gravel. Based on an historical seismic survey, depth to bedrock at the Site ranges from approximately 20 to 50 feet below ground surface. The bedrock surface reportedly slopes down to the south. No bedrock monitoring wells have been installed at the Site.

Potential routes for human exposure to contaminated groundwater include direct contact and ingestion. Direct contact could occur through excavation activities that reach the groundwater table. Ingestion could occur through uptake of contaminated groundwater by water supply wells. Nearby residential properties to the south and east of the Site utilize private water supply wells. The closest known water supply well is located approximately 400 feet south of the Site on an adjoining property across the Raymond Road/Chester Turnpike intersection (Map 11, Lot 14).

Potential environmental receptors include an unnamed brook located immediately east and south of the former waste disposal areas and a perennial stream located northwest of the former waste disposal areas. Both of these surface water features flow in a generally westerly direction

Reference: 2020 Annual Summary Report
Auburn Landfill, Chester Turnpike, Auburn, NH
NHDES Site #199002015, Project #1521

towards wetlands associated with Little Massabesic Lake, which is located approximately 3,700 feet west of the Site.

WORK PERFORMED

Work conducted during the reporting period includes the installation of MW-101 and MW-102 at the Site in January 2020, as well as the GMP-required sample event conducted on April 23, 2020. These two tasks are discussed separately below.

Installation of MW-101 and MW-102 - Prior to the initiation of drilling activities, Stantec performed the following tasks:

- Updated the site-specific health and safety plan (HASP) in accordance with OSHA guidelines and Stantec protocols;
- Provided notification to Dig Safe to mark underground utilities located in the vicinity of the proposed wells and contracted with a private utility locate service provider to identify potential underground utilities/structures at the planned drilling locations; and
- Contracted with New England Boring Contractors of Derry, New Hampshire, a New Hampshire-licensed driller, for the advancement of soil borings and installation of monitoring wells at the approved locations.

On January 28, 2020 borings B-101 and B-102 were advanced using hollow-stem augers to a depth of 5-7 feet below the field-determined water table. The locations of the two monitoring wells (MW-101 and MW-102) are depicted on attached Figure 2. Soil samples were collected at five (5)-foot intervals using a split-spoon sampler driven 24-inches. Collected soil samples were field screened using a photoionization detector (PID) and characterized for grain size, color, moisture content, as well as for any evidence of contamination (odor, staining). Soil classification was documented in the project notebook. Soil samples were not collected for laboratory analysis as drilling was not conducted in a presumed source area. Observed soil types and field screening data for the boreholes are provided on the attached Monitoring Well Logs.

Following the completion of the borings to the proposed termination depth, they were completed as monitoring wells MW-101 and MW-102 using flush-threaded 2.0-inch (inside diameter) polyvinyl chloride (PVC) casing and screen (with 0.010-inch slots). The screen length was 10 feet. Clean filter sand was installed around the screen interval to a depth 1 to 2 feet above the well screen, followed by a 1- to 2-foot hydrated bentonite seal. The remaining annular space will be filled with drill cuttings and clean filter sand to the surface. A lockable expandable plug was installed in the

Reference: 2020 Annual Summary Report
Auburn Landfill, Chester Turnpike, Auburn, NH
NHDES Site #199002015, Project #1521

PVC casing stick-up. The well was protected at the surface with a 5-inch diameter lockable steel casing. Boring construction details are provided on the attached Monitoring Well Logs.

The wells were developed by surging and pumping to remove fines introduced during installation using high density polyethylene (HDPE) tubing and a Delrin® foot value (inertial pump). The tops of the PVC well casings, the tops of the steel protective casings, and the ground surface at each well were proposed to be surveyed for elevational control, but this was not completed in 2020. Therefore, they will be tied into the existing well network during 2021 so that groundwater levels from the two wells can be used when preparing groundwater flow maps for the landfill.

April 2020 GMP Sampling Event - During the April 23rd sampling event, Stantec recorded groundwater elevation data and collected groundwater samples from monitoring wells MW-1, MW-2, MW-3, and MW-4, and surface water samples from the SW-1and SW-2 monitoring points per the GMP. Historically, sample location SW-2 has been observed to be dry quite frequently. In addition, groundwater elevation data and samples for PFAS analysis were collected from newly-installed wells MW-101 and MW-102. Monitoring well and surface water sampling locations are shown on Figure 2.

Groundwater elevations in monitoring wells were gauged using an electronic water level meter. Groundwater elevation data are summarized on Table 1. Prior to collecting groundwater samples, a minimum of three well volumes were purged from each monitoring well using dedicated Delrin® foot valves and polyethylene tubing (inertial pumps). Samples from the surface water locations were collected using a dedicated polyethylene bailer. Specific conductance and pH were measured in the field using a properly calibrated water quality meter.

Groundwater samples were collected into laboratory-supplied bottles and submitted under chain of custody to a New Hampshire-certified analytical laboratory for analysis. Samples collected from MW-1 to MW-4, SW-1, and SW-2 were analyzed for nitrate, sulfate, TKN, chloride, iron, manganese, and 1,4-dioxane (0.25 micrograms per liter [µg/L] detection limit). Samples collected from MW-1 to MW-4, MW-101, and MW-102 were also analyzed for PFAS by EPA Method 537 Rev 1.1 Modified. A field blank was also collected and analyzed by EPA Method 537 Rev 1.1 Modified for quality assurance/quality control (QA/QC). PFAS sample collection was in accordance with the NHDES Standard Operating Procedure (SOP) #HWRB-21. The PFAS isomers reported included the list of nine compounds recommended by the NHDES as the minimum analytes at PFAS investigations.[1]

[1] List of PFAS tested included perfluorononanoic acid (PFNA), perfluorooctanoic acid (PFOA), perfluoroheptanoic acid (PFHpA), perfluorohexanoic acid (PFHxA), perfluoropentanoic acid (PFPeA), perfluorobutanoic acid (PFBA), perfluorooctanesulfonic acid (PFOS), perfluorohexanesulfonic acid (PFHxS), and perfluorobutanesulfonic acid (PFBS).

Reference: 2020 Annual Summary Report
Auburn Landfill, Chester Turnpike, Auburn, NH
NHDES Site #199002015, Project #1521

Monitoring well samples for metals analysis were filtered in the field using 0.45-micron in-line disposable filters and analyzed as dissolved metals. Surface water samples for metals analysis were not filtered and, therefore, were analyzed as total metals. The April 2020 laboratory reports (2) are attached.

GROUNDWATER FLOW

Depth to groundwater measured during the April 2020 sampling event ranged from 4.05 feet below top of well casing at MW-2, to 24.95 feet below top of well casing at MW-3. Depth to groundwater measurements were generally within their historical ranges. Current and historical groundwater gauging data are presented on Table 1.

Using the April 2020 groundwater elevation data, Stantec constructed groundwater flow contours depicted on Figure 2. Based on these data, the direction of groundwater flow at the Site is generally to the southwest, which is consistent with historical results.

SAMPLING RESULTS

Summaries of the analytical results collected at monitoring wells and surface water locations over the most recent five years are presented in Tables 2 and 3, respectively (attached). A discussion of the results of the April 2020 sampling is provided below.

MW-1

Monitoring well MW-1 is located upgradient of the landfill at the northeastern end of the former waste disposal areas adjacent to an ash disposal area. No AGQS exceedances were observed during the April 2020 sample event with the exception of PFOA, which was detected at a concentration of 16.0 nanograms per liter (ng/L) (PFOA AGQS = 12.0 ng/L). This was the first detected exceedance of PFAS in this well.

MW-2

Monitoring well MW-2 is located southwest (downgradient) from the ash disposal area. Manganese was detected at concentrations exceeding its AGQS of 840 µg/L during the April 2020 sampling event (2,740 µg/L). PFOA was detected at a concentration of 20.5 ng/L, which exceeded its AGQS of 12.0 ng/L. No other AGQS exceedances were identified.

Reference: 2020 Annual Summary Report
Auburn Landfill, Chester Turnpike, Auburn, NH
NHDES Site #199002015, Project #1521

MW-3

Monitoring well MW-3 is located between a former construction and demolition debris disposal area and the former municipal waste landfill. Manganese, at 2,910 µg/L, was detected at a concentration exceeding AGQS during the April 2020 event. PFOA, PFOS, and PFHxS were detected at concentrations (97.0 ng/L, 58.6 ng/L, and 31.5 ng/L, respectively) exceeding their applicable AGQS. No other parameters were detected at concentrations exceeding AGQS during the April sampling events.

MW-4

Monitoring well MW-4 is located in the southwestern portion of the waste disposal areas adjacent to the former municipal waste landfill. PFOA and PFOS were detected at concentrations (35.7 ng/L and 48.6 ng/L, respectively) exceeding their applicable AGQS. No parameters were detected at concentrations exceeding AGQS during either the three sampling events.

MW-101

Monitoring well MW-101 is located west and downgradient of the former municipal waste landfill. While both PFOA and PFOS were detected in the sample from this well, the detected concentrations did not exceed their applicable AGQS.

MW-102

Monitoring well MW-102 is located southwest and downgradient of the former municipal waste landfill. No PFAS compounds were detected in the sample from this well at concentrations exceeding laboratory reporting limits.

SW-1

Surface water sample point SW-1 is collected in the unnamed brook located south and east of the landfill where it crosses Raymond Road. No parameters were detected at concentrations exceeding Water Quality Criteria (WQC) during the April 2020 sampling event.

SW-2

Surface water sample SW-2 is collected from the perennial stream located northwest of the landfill. Chloride exceeded its Fresh Chronic WQC of 230,000 µg/L during the April 2020 event at a concentration of 260,000 µg/L. No other parameters were detected at concentrations exceeding WQC during the April 2020 event.

Reference: 2020 Annual Summary Report
Auburn Landfill, Chester Turnpike, Auburn, NH
NHDES Site #199002015, Project #1521

HISTORICAL TRENDS

INORGANIC PARAMETERS

MW-1

The metals arsenic, chromium, lead, and manganese were detected at concentrations above their AGQS during the well's first sampling event in March 2000. However, only arsenic and manganese were subsequently detected at concentrations exceeding AGQS in this well.

Arsenic was detected at its highest concentration (154 µg/L) in March 2000 and was not detected above its AGQS again until April 2009 (at a concentration of 19 µg/L). Between 2009 and 2014, the detection of arsenic in the well at concentrations exceeding AGQS was sporadic. AGQS exceedances of arsenic have not been detected since 2014.

Since peaking at 3,700 µg/L in July 2008, manganese concentrations have decreased to less than 300 µg/L since the April 2015 sample event. Manganese concentrations have remained below AGQS during the past nine sampling events, last exceeding AGQS in November 2012.

Other analyzed metals have not been detected above their AGQS and/or laboratory reporting limits since the well was first sampled in March 2000. MW-1 arsenic and manganese trends are depicted in Figure 3. The March 2000 sampling data have been omitted from these figures to more effectively present subsequent data.

MW-2

The metals arsenic, barium, chromium, lead, manganese, and mercury were detected at concentrations above their AGQS during the well's first sampling event in March 2000. However, only manganese has been detected above its AGQS since that time with the exception of arsenic in April 2019, which was detected at a concentration of 138.5 µg/L. Beginning in April 2007, the concentration of manganese exhibited a generally increasing trend. During the April 2013 sampling event, manganese was detected at its highest recorded concentration in this well (33,900 µg/L). Beginning in 2016, manganese concentrations began to decline, but based on the most recent data, are still above AGQS. Manganese concentration trends for MW-2 are depicted on Figure 4.

MW-3

The metals arsenic, barium, chromium, lead, manganese, and mercury were detected at concentrations above their AGQS during the well's first sampling event in March 2000. Of these

metals, only arsenic and manganese have continued to be detected above their AGQS. Arsenic and manganese concentrations appear to exhibit a generally decreasing trend. Arsenic and manganese trends are depicted on Figure 5.

In addition to these metals, sulfate has also been repeatedly detected at concentrations above its AGQS. However, the detected concentrations of sulfate have remained below the AGQS of 500,000 µg/L since 2012 and sulfate concentrations appear to exhibit a generally decreasing trend over time. The sulfate trend in this well is depicted on Figure 6.

MW-4

The metals arsenic, chromium, lead, manganese, and mercury were detected at concentrations above their AGQS during the well's first sampling event in March 2000. However, no analytes have been detected at concentrations above AGQS in this well since manganese last exceeded its AGQS in April 2004.

SW-1

Iron has been the only analyte detected at a concentration exceeding WQC at this surface water location. Iron exceeded the Fresh Chronic WQC during the July 2000 sampling event only. No other analytes have been detected at concentrations exceeding WQC.

SW-2

Iron and lead have historically been the only analytes detected at concentrations above WQC at this surface water location. Chloride exceeded its WQC for the first time in April 2017, and again in April 2018 at concentrations of 401,000 µg/L and 280,000 µg/L, respectively. In April 2020 the chloride concentrations was 260,000 µg/L, suggesting a rising trend for chloride at this location. Iron was detected at concentrations exceeding the Fresh Chronic WQC during the August 2006, April 2007, and April 2017 sampling events, while lead was detected at a concentration exceeding the Fresh Chronic WQC during the April 2007 sampling event only. No other analytes have been detected at concentrations exceeding WQC. This location has been dry during approximately half the GMP-required sampling events.

PFAS

One or more PFAS compounds were detected above laboratory reporting limits in all four of the on-site monitoring wells (MW-1 to MW-4) and MW-102 during the most recent sampling event in April 2020. Exceedances of the PFOA AGQS were present in MW-1 to MW-4, while PFOS AGQS exceedances were noted in MW-3 and MW-4. The highest total PFAS concentration (284.53 ng/L)

Reference: 2020 Annual Summary Report
Auburn Landfill, Chester Turnpike, Auburn, NH
NHDES Site #199002015, Project #1521

was detected in MW-3, which is located within the waste disposal area. None of the PFAS compounds detected in downgradient well MW-101 exceeded AGQS, although PFOA was detected at a concentration (10.4 ng/L) only slightly below it AGQS of 12 ng/L. No PFAS compounds were detected in MW-102 at concentrations above laboratory reporting limits. The April 2020 PFAS results were the highest concentrations yet detected in the site wells, except for MW-2, which has shown relatively stable PFOA levels over several sampling events.

VOLATILE ORGANIC COMPOUNDS

Analysis for VOCs was not required during this sampling event. Groundwater and surface water samples have been analyzed for VOCs periodically over their monitoring history. Samples were most recently analyzed for VOCs in April 2019. No VOCs have been detected in groundwater or surface water samples at concentrations exceeding AGQS or WQC, respectively. The most notable VOC detections were at MW-1 during the April 2009 sampling event, when several petroleum-related VOCs were detected at concentrations below AGQS. Otherwise, VOC detections have mainly occurred when contaminants were also detected in the laboratory method blanks, suggesting possible laboratory contamination. Only one VOC (acetone) was detected in the samples collected during the April 2019 sampling event.

CONCLUSIONS

Based on the April 2020 sampling results, the following parameters were detected at concentrations above AGQS, and based on historical data, show the listed trends:

Parameter	Locations with AGQS/WQC Exceedances	Contaminant Trend
PFOA	MW-1	Up
	MW-2	Stable
	MW-3	Up
	MW-4	Up
PFOS	MW-3	Stable
	MW-4	Stable
Manganese	MW-2	Down
	MW-3	Down
Chloride	SW-2	Down

Reference: 2020 Annual Summary Report
Auburn Landfill, Chester Turnpike, Auburn, NH
NHDES Site #199002015, Project #1521

RECOMMENDATIONS

Based on the data summary presented above, Stantec recommends that sampling of the Site's monitoring wells and surface water locations continue in accordance with the GMP to monitor on-going contaminant trends.

Given the detection of PFAS at concentrations just slightly below AGQS at the downgradient property line, Stantec recommends that the current GMP for the Site be amended to add the requirement for the sampling and analysis of samples from MW-101 and MW-102 for PFAS analysis on an annual basis (April each year).

We trust that this information is sufficient for your needs. If you have any questions or comments, or require any additional information, please call the undersigned.

Regards,

STANTEC CONSULTING SERVICES INC.

Jacob Poirier
Staff Scientist
Phone: 603-391-7787
Fax: (603) 669-7636
Jacob.Poirier@stantec.com

David A. Allwine, PG
Senior Associate
Phone: (603) 206-7553
Fax: (603) 669-7636
David.Allwine@stantec.com

Attachments: 1 - Tables 1-3
2 - Figures 1-5
3 - April 2020 Laboratory Reports (2)

c. Bill Herman, Town of Auburn

pj v:\1917\active\191710504\report\2020 april gmp event\auburn annual report 2020.docx

Stantec Consulting Services Inc.
5 Dartmouth Drive, Suite 200, Auburn NH 03032
Tel: (603) 669-8672, Fax: (603) 669-7636

February 10, 2021
File: 191710504

Attention: Mr. William Herman
Town Administrator
Town of Auburn
47 Chester Road
Auburn, NH 03032

Reference: Proposal for 2021 GMP and Post-Closure Monitoring Activities
Auburn Town Landfill, Chester Turnpike, Auburn, NH
NHDES Site #199002015, Project #1521

Dear Mr. Herman,

Stantec Consulting Services Inc. (Stantec) is pleased to provide the Town of Auburn with this proposal to conduct the 2021 monitoring and reporting tasks associated with the above-referenced site. The site location is depicted on Figure 1 (attached). The 2020 groundwater monitoring and reporting tasks are required by Groundwater Management Permit (GMP) #GWP-199002015-A-004 (attached), which was issued by the New Hampshire Department of Environmental Services (DES) to monitor groundwater and surface water quality in the vicinity of the closed town landfill. Post-closure monitoring is required per New Hampshire Department of Environmental Services (DES) solid waste regulations.

PROPOSED SCOPE OF WORK

Task 1 - GMP Water Quality Monitoring

Based on the GMP requirements, samples will be collected during 2021 from the monitoring wells and surface water locations specified in the table below.

Monitoring Location	Sampling Frequency	Parameters	Reporting Requirements
MW-1, MW-2, MW-3, MW-4, SW-1, and SW-2	April 2021	Specific conductance @25°C, pH, Nitrate, Sulfate, Total Kjeldahl Nitrogen (TKN), Chloride, Dissolved Iron, Manganese and Arsenic (monitoring wells), Total Iron, Manganese, and Arsenic (surface water), and Static Water Levels (monitoring wells only), PFAS using an isotope dilution method compliant with the USDOD Quality Systems Manual 5.2 (or later) Table B-15, or USEPA Method 537.1, and Static Water Levels (monitoring wells only)	Annual Summary Report due in June 2021
MW-1, MW-2, MW-3, MW-4, SW-1, and SW-2	April 2021	1,4-Dioxane by EPA 8270 SIM (using a 0.25 µg/L reporting limit)	

Reference: Proposal for 2021 GMP Monitoring Activities
Auburn Town Landfill, Chester Turnpike, Auburn, NH
NHDES Site #199002015, Project #1521

For the purpose of this proposal, Stantec assumes that the newly installed wells MW-101 and MW-102 will also be sampled for PFAS. These wells are not included in the GMP monitoring program but given the detection in well MW-101 in April 2020, it is expected that the DES will request additional sampling of these wells for PFAS during the 2021 sampling event; therefore, the cost for their collection and analysis has been included in the budget for this proposal provided below.

Water levels and field parameter measurements will be collected from the monitoring wells prior to purging. Purging will include the removal of a minimum of three standing well volumes using dedicated polyethylene tubing and either a Delrin® foot valve (inertial pump) or a peristaltic pump. Following purging, samples will be collected using the same dedicated equipment into laboratory-supplied containers, field preserved, and transported to a New Hampshire-certified laboratory for analysis of the parameters indicated in the table above. Surface water samples will be collected as grab samples and analyzed for parameters listed the in the table above.

PFAS sample collection will be in accordance with DES Standard Operating Procedure (SOP) #HWRB-21. For quality assurance/quality control (QA/QC), one field blank will also be collected and analyzed for PFAS. At the request of DES, the PFAS compounds to be reported will include a broad list (attached) to help evaluate the potential source(s), fate, and transport of PFAS impacts.

The current GMP requires that following the April sampling events the results of the analysis be provided in an Annual Summary Report, which will include a description of the work performed, summaries of the collected data, data trends, figures, tables, and copies of the laboratory reports. The information will be provided to the Town and to the NHDES via upload to the OneStop website during June 2021. The PFAS data will also be uploaded to the DES Environmental Monitoring Database.

Task 2 - Landfill Post-Closure Inspection and Reporting

Post-closure inspection of the landfill cap will be completed twice during 2021 in accordance with Env-Sw 807.05. The inspections will include observation of the condition of the cover system, monitoring wells, and surveyed benchmarks, if any, as well as identification of any areas of settlement, erosion, vandalism, animal burrowing, trespassing, or general maintenance issues. The inspections will be completed during the April 2021 GMP sampling event and during October/November. The summary post-closure report for the 2021 inspection will be submitted to the Town for signature and transmittal to DES no later than March 31, 2022. Please note that landfill gas monitoring is not completed as part of the post-closure monitoring of the landfill.

Reference: Proposal for 2021 GMP Monitoring Activities
Auburn Town Landfill, Chester Turnpike, Auburn, NH
NHDES Site #199002015, Project #1521

COST

Stantec will complete the 2020 proposed scope of work for the lump sum fees provided in the table below.

Task	Cost
1. April 2021 GMP Sampling and Annual Summary Report	$8,600.00
2. Landfill Post-Closure Inspection and Reporting	$ 800.00
Total	**$9,400.00**

SCHEDULE

The project tasks will be completed in accordance with the time frames described above.

PROJECT MANAGEMENT

David A. Allwine, a New Hampshire Professional Geologist, will serve as the Stantec project manager for this work. Ms. Leigh-Anne Sapienza will also be available to assist you should Mr. Allwine not be available.

ACCEPTANCE AND TERMS AND CONDITIONS

If this proposal is acceptable, please provide your authorization to begin work by signing below in the space provided and returning it to our attention via fax at fax number (603) 669-7636 or by email to david.allwine@stantec.com. This work will be conducted in accordance with the attached Stantec Terms and Conditions, which are incorporated herein by reference.

Reference: Proposal for 2021 GMP Monitoring Activities
Auburn Town Landfill, Chester Turnpike, Auburn, NH
NHDES Site #199002015, Project #1521

We appreciate the opportunity to continue assisting the Town of Auburn with this project. If you have any questions, please do not hesitate to contact the undersigned.

Regards,

STANTEC CONSULTING SERVICES INC.

David A. Allwine, PG
Senior Associate
Phone: (603) 206-7553
Mobile: (603) 498-6135
David.Allwine@stantec.com

Attachments: GMP No. GWP-199002015-A-004
Figure 1 - Site Location Plan
Figure 2 – Site Plan
Proposed List of PFAS Compounds
Stantec Terms and Conditions

c. File

Reference: Proposal for 2021 GMP Monitoring Activities
Auburn Town Landfill, Chester Turnpike, Auburn, NH
NHDES Site #199002015, Project #1521

ACCEPTANCE

I accept the Price, Scope, Schedule, and Terms and Conditions of this proposal.

Town of Auburn, NH

_____
Signature

_____
Printed Name/Title

_____
Date

ad v:\1917\active\191710504\contract\2021 gmp sampling\auburn lf gmp 2021 proposal.docx

The State of New Hampshire
DEPARTMENT OF ENVIRONMENTAL SERVICES

Robert R. Scott, Commissioner

EMAIL ONLY

December 18, 2019

Richard W. Eaton, Chairman
Board of Selectmen
Town of Auburn
47 Chester Road, PO Box 309
Auburn, NH 03032

Subject: **Auburn** – Town of Auburn Landfill, Chester Turnpike
DES Site #**199002015**, Project #1521

2019 Groundwater Management Permit Renewal Application, prepared by Stantec Consulting Services Inc. (Stantec), dated December 3, 2019

Dear Mr. Eaton:

Please find enclosed Groundwater Management Permit Number **GWP-199002015-A-004**, as approved by the New Hampshire Department of Environmental Services (NHDES). This Permit is issued for a period of 5 years to monitor groundwater quality at the above-referenced site, and is a renewal of your Permit that will expire on March 23, 2020.

All required sampling results and monitoring summaries should continue to be addressed to the NHDES Groundwater Management Permits Coordinator. Correspondence should include the appropriate Cover Sheet for Reports and completed Cover Sheet for Groundwater Monitoring Reports that clearly show the NHDES identification number for this site (i.e., DES Site #**199002015**, Project #1521). The submittal of documents in an electronic format through NHDES' OneStop database is preferred.

NHDES has reviewed the above-referenced application for the closed Town of Auburn Landfill site, as recently submitted to NHDES by the permittee's environmental consultants, Stantec. Based on our review, we have prepared this letter to provide our review comments to the Town of Auburn and Stantec.

Permit Monitoring Program

Based on monitoring data collected to date under the Permit, the primary groundwater contaminants detected have generally been arsenic, manganese and more recently per- and polyfluoroalkyl substances (PFAS). Reported concentrations of arsenic exceed the NHDES Ambient Groundwater Quality Standards (AGQS) at monitoring well MW-2 and concentrations of manganese exceed the AGQS at monitoring wells MW-2 and MW-3.

With the exception of acetone reported at a concentration of 8.3 ug/L (below AGQS) during April 2019 at monitoring well MW-1, VOCs have not been reported above laboratory detection limits during the past five years. However, the AGQS for 1,4-dioxane was decreased on September 1, 2018 from 3.0 ug/L to 0.32 ug/L. The lower laboratory reporting limit (0.25 ug/L or less) is required during all future VOC analysis. Per our November 20, 2019 Response Letter, groundwater sampling during the next April field sampling event shall include 1,4-dioxane.

Concentrations of several PFAS have been reported at monitoring wells MW-1 through MW-4 and the onsite Dug Well[1]. The PFAS regulated by NHDES at the time of sampling included perfluorooctanoic acid (PFOA) and perfluorooctane sulfonic acid (PFOS), and the former AGQS of 70 ng/L, which applied individually or as a sum of the combined PFOA and PFOS concentrations ("PFOA+PFOS"). The results of sampling conducted in April 2017, June 2017, December 2017, and April 2018 reported only monitoring wells MW-3 and MW-4 to exceed the former AGQS.

Off-site private water supply wells at 518 Raymond Road (Kimball) and 612 Raymond Road (Richards) were sampled for PFAS in June 2017 and December 2017. Neither sampling event reported concentrations of PFAS above laboratory detection limits (i.e., non-detect).

As noted by Stantec, NHDES recently adopted rules that either revised or added AGQS for four individual PFAS, which became effective on September 30, 2019. The four PFAS and their revised AGQS include:

- PFOA – 12 nanograms per liter (ng/L);
- PFOS – 15 ng/L;
- Perfluorohexane sulfonic acid (PFHxS) – 18 ng/L; and,
- Perfluorononanoic acid (PFNA) – 11 ng/L.

In comparison of the PFAS data collected to the revised AGQS, Stantec notes that PFOS exceeded the new AGQS during sampling events in April 2017 and 2018 in samples collected from monitoring wells MW-3 and MW-4. PFOA exceeded the new AGQS in monitoring wells MW-2, MW-3 and MW-4.

Please note that, consistent with current NHDES guidance, samples collected for PFAS analysis should be analyzed using an isotope dilution method following the protocols for PFAS by LC/MS/MS outlined in Table B-15 of the U.S. Department of Defense Quality Systems Manual 5.2 (or later version), or USEPA Method 537.1. NHDES further recommends that samples be submitted for a broad PFAS analysis to evaluate the potential source(s), transport, and fate of PFAS impacts. Quantification of linear and branched isomers should be completed as required by USEPA Method 537.1. The laboratory should report acid forms, accounting for the mass of the counterion as described in USEPA Method 537.1. NHDES also recommends that analytical data summary tables and laboratory reports include both CAS Nos. and analyte names, with PFAS ordered by carbon chain length and split by families.

NHDES' current laboratory testing guidelines for PFAS can be found at:

https://www4.des.state.nh.us/nh-pfas-investigation/wp-content/uploads/2019/05/201905_Lab-Guidance-1.pdf

Finally, please note that along with the routine submittal of documents through NHDES' OneStop website, NHDES is requesting that all PFAS analytical results be uploaded to NHDES' Environmental Monitoring Database (EMD). Guidance for the EMD upload process can be found at:

https://www.des.nh.gov/organization/commissioner/documents/pfas-emd-guidance.pdf.

[1] Located at the active transfer station and reportedly not used for consumptive purposes.

Technical questions regarding EMD data uploads should be directed to Sam Fontaine at (603) 271-2979 or Samuel.Fontaine@des.nh.gov.

Proposed Revisions to the Permit

In general, NHDES concurs with the proposed sampling parameters and frequencies recommended by Stantec. NHDES has the following comments and amendments which have been incorporated within the attached Permit.

- Stantec recommends submittal of a Periodic Summary Report in June 2021 and June 2024. In consideration of the ongoing evaluation of PFAS exceeding the AGQS at downgradient monitoring wells and the extent of PFAS groundwater impacts currently being undefined, NHDES will require an Annual Summary Report.
- Stantec recommends installing two additional monitoring wells southwest of MW-4 at the GMZ downgradient boundary to evaluate the extent of PFAS contamination. NHDES concurs with this recommendation and will amend the Permit accordingly after installation and initial sampling has been completed.
- Two surface water sampling locations (SW-1 and SW-2) have historically been included within the groundwater quality monitoring program. Laboratory analysis has included standard landfill leachate characteristics, VOCs, and recently PFAS. Based on a review of the data provided summarizing the past five years, VOCs have not been reported above laboratory reporting limits and analysis of PFAS have reported only trace concentrations. In addition, SW-2 is often reported as “Dry” with no sample able to be collected. NHDES will consider removing the requirement for analysis of VOCs and PFAS from these surface sample locations after installation of the additional monitoring wells, as recommended by Stantec, has been completed.

Should you have any questions, please contact me at NHDES’ Waste Management Division.

Sincerely,

Matthew Taylor, PG
Hazardous Waste Remediation Bureau
Tel: (603) 271-2999
Fax: (603) 271-2181
Email: Matthew.Taylor@des.nh.gov

ec: Paul Rydel, PG, Supervisor, HWRB
Don Watson, SWMB
David A. Allwine, PG, Stantec
Attention Health Officer, Town of Auburn

The

NEW HAMPSHIRE DEPARTMENT OF ENVIRONMENTAL SERVICES

hereby issues

GROUNDWATER MANAGEMENT PERMIT NO. GWP-199002015-A-004

to the permittee

TOWN OF AUBURN

to monitor the groundwater quality at the

CLOSED TOWN OF AUBURN LANDFILL
(Chester Turnpike)

in AUBURN, N.H.

via the groundwater monitoring system comprised of

4 monitoring wells, 2 surface water sampling points, and 2 off-site private water supply wells

as depicted on the Site Plan entitled

Site Plan

dated December 3, 2019, prepared by Stantec Consulting Services Inc.

TO: TOWN OF AUBURN
PO BOX 309
47 CHESTER ROAD
AUBURN, NH 03032-0309

Date of Issuance: March 24, 2020
Date of Expiration: March 23, 2025

Pursuant to authority in N.H. RSA 485-C:6-a, the New Hampshire Department of Environmental Services (NHDES), hereby grants this Permit to monitor past discharges to the groundwater at the above-described location for five years, subject to the following conditions:

(continued)

STANDARD MANAGEMENT PERMIT CONDITIONS

1. The permittee shall not violate Ambient Groundwater Quality Standards adopted by NHDES (N.H. Admin. Rules Env-Or 600) in groundwater outside the boundaries of the Groundwater Management Zone, as shown on the referenced site plan.

2. The permittee shall not cause groundwater degradation that results in a violation of surface water quality standards (N.H. Admin. Rules Env-Wq 1700) in any surface water body.

3. The permittee shall allow any authorized staff of NHDES, or its agent, to enter the property covered by this Permit for the purpose of collecting information, examining records, collecting samples, or undertaking other action associated with this Permit.

4. The permittee shall apply for renewal of this Permit prior to its expiration date but no more than 90 days prior to expiration.

5. This Permit is transferable only upon written request to, and approval of, NHDES. Compliance with the existing Permit shall be established prior to Permit transfer. Transfer requests shall include the name and address of the person to whom the Permit transfer is requested, the signatures of the current and future permittees, and a summary of all monitoring results to date.

6. NHDES reserves the right, under N.H. Admin. Rules Env-Or 600, to require additional hydrogeologic studies and/or remedial measures if NHDES receives information indicating the need for such work.

7. The permittee shall maintain a water quality monitoring program and submit monitoring results to NHDES no later than 45 days after sampling. Samples shall be taken from the monitoring wells and surface water sampling points as shown and labeled on the referenced site plan, and other sampling points as listed in the following table in accordance with the schedule outlined herein:

Monitoring Locations	**Sampling Frequency**	**Parameters**
MW-1, MW-2, MW-3, MW-4, SW-1, and SW-2	April each year	Specific Conductance @ 25°C, pH, Nitrate, Sulfate, TKN, Chloride, Iron, Manganese, Arsenic, PFAS using an isotope dilution method compliant with the USDOD Quality Systems Manual 5.2 (or later) Table B-15, or USEPA Method 537.1, and Static Water Elevation (in monitor wells)
Same as above	April 2020	1,4-Dioxane (using a 0.25 ug/L reporting limit)
Same as above	April 2024	NHDES Waste Management Division Full List of Analytes for Volatile Organics including 1,4-Dioxane (using a 0.25 ug/L reporting limit) and Drinking Water Metals
518 and 612 Raymond Road private water supply wells	April 2024	PFAS as above

(continued)

Sampling shall be performed in accordance with the documents listed in Env-Or 610.02 (e). Samples shall be analyzed by a laboratory certified by the U.S. Environmental Protection Agency, or NHDES pursuant to Env-C 300. All overburden groundwater samples collected for metals analysis (iron, manganese, and Drinking Water Metals) shall be analyzed for dissolved metals; and thus must be field filtered (with a 0.45-micron filter) and acidified after filtration in the field. Surface water samples, and groundwater samples collected from bedrock or water supply wells, shall be analyzed for total metals, and shall not be filtered. As referred to herein, the term “Drinking Water Metals” refers to: arsenic, barium, cadmium, chromium, lead, mercury, selenium, and silver.

Summaries of water quality shall be submitted annually to NHDES’ Waste Management Division, in the month of June, using a format acceptable to NHDES. The Annual Summary Report shall include the information listed in Env-Or 607.04 (a), as applicable.

The Annual Summary Report shall be prepared and stamped by a professional engineer or professional geologist licensed in the State of New Hampshire.

8. Issuance of this Permit is based on the Groundwater Management Permit Renewal Application dated December 3, 2019, and the historical documents found in NHDES file DES #199002015. NHDES may require additional hydrogeologic studies and/or remedial measures if invalid or inaccurate data are submitted.

9. Within 30 days of discovery of a violation of an ambient groundwater quality standard at or beyond the Groundwater Management Zone boundary, the permittee shall notify NHDES in writing. Within 60 days of discovery, the permittee shall submit recommendations to correct the violation. NHDES shall approve the recommendations if NHDES determines that they will correct the violation.

10. All monitoring wells at the site shall be properly maintained and secured from unauthorized access or surface water infiltration.

ADDITIONAL CONDITION FOR LANDFILLS

11. The permittee shall maintain the capping system at the facility so that it continues to meet the standards set forth in Env-Sw 805.10.

SPECIAL CONDITIONS FOR THIS PERMIT

12. Recorded property within the Groundwater Management Zone includes the lot as listed and described in the following table:

Tax Map / Lot No.	**Property Address**	**Owner Name and Address**	**Deed Reference (Book / Page)**
Map 11 / Lot 19-1	Auburn Landfill Chester Turnpike Auburn, NH 03032	Town of Auburn P.O. Box 309 47 Chester Road Auburn, NH 03032	Book 296 / Page 1444

13. The permittee shall update the ownership information required by Env-Or 607.03(a)(20) for all properties within the Groundwater Management Zone prior to renewal of the Permit, or upon a recommendation for site closure.

Karlee Kenison

Karlee A. Kenison, P.G., Administrator
Hazardous Waste Remediation Bureau
Waste Management Division

Any person aggrieved by any terms or conditions of this Permit may appeal to the N.H. Waste Management Council ("Council") by filing an appeal that meets the requirements specified in RSA 21-O:14 and the rules adopted by the Council, Env-WMC 200. The appeal must be filed **directly with the Council within 30 days** of the date of this decision and must set forth fully **every ground** upon which it is claimed that the decision complained of is unlawful or unreasonable. Only those grounds set forth in the notice of appeal can be considered by the Council.

Information about the Council, including a link to the Council's rules, is available at https://nhec.nh.gov/ (or more directly at https://nhec.nh.gov/waste/index.htm). Copies of the rules also are available from NHDES' Public Information Center at (603) 271-2975.

GWP-199002015-A-004

MAP SOURCE:

WWW.TRAILS.COM

USGS CANDIA [NH] QUAD
43.015°N, 71.32°W (NAD83/WGS84)

NORTH

2000 0 2000

Scale in feet

Stantec Consulting Services Inc.

Stantec

STANTEC LOCATION: AUBURN, NEW HAMPSHIRE				
DATE PREPARED: 10–20–10	DESIGNED BY: DAA	DRAWN BY: JJW	CHECKED BY: DAA	REVIEWED BY: DAA
REVISION DATE:	REVISION NO:	DRAWN BY:	CHECKED BY:	REVIEWED BY:
PROJECT NAME/FILE NAME: AUBURN LF		PROJECT NUMBER/PHASE: 191710504	SCALE: 1:24000	PREPARED FOR: TOWN OF AUBURN

DRAWING TITLE:

SITE LOCATION PLAN

AUBURN LANDFILL
CHESTER TURNPIKE AUBURN NH

FIGURE NO. 1

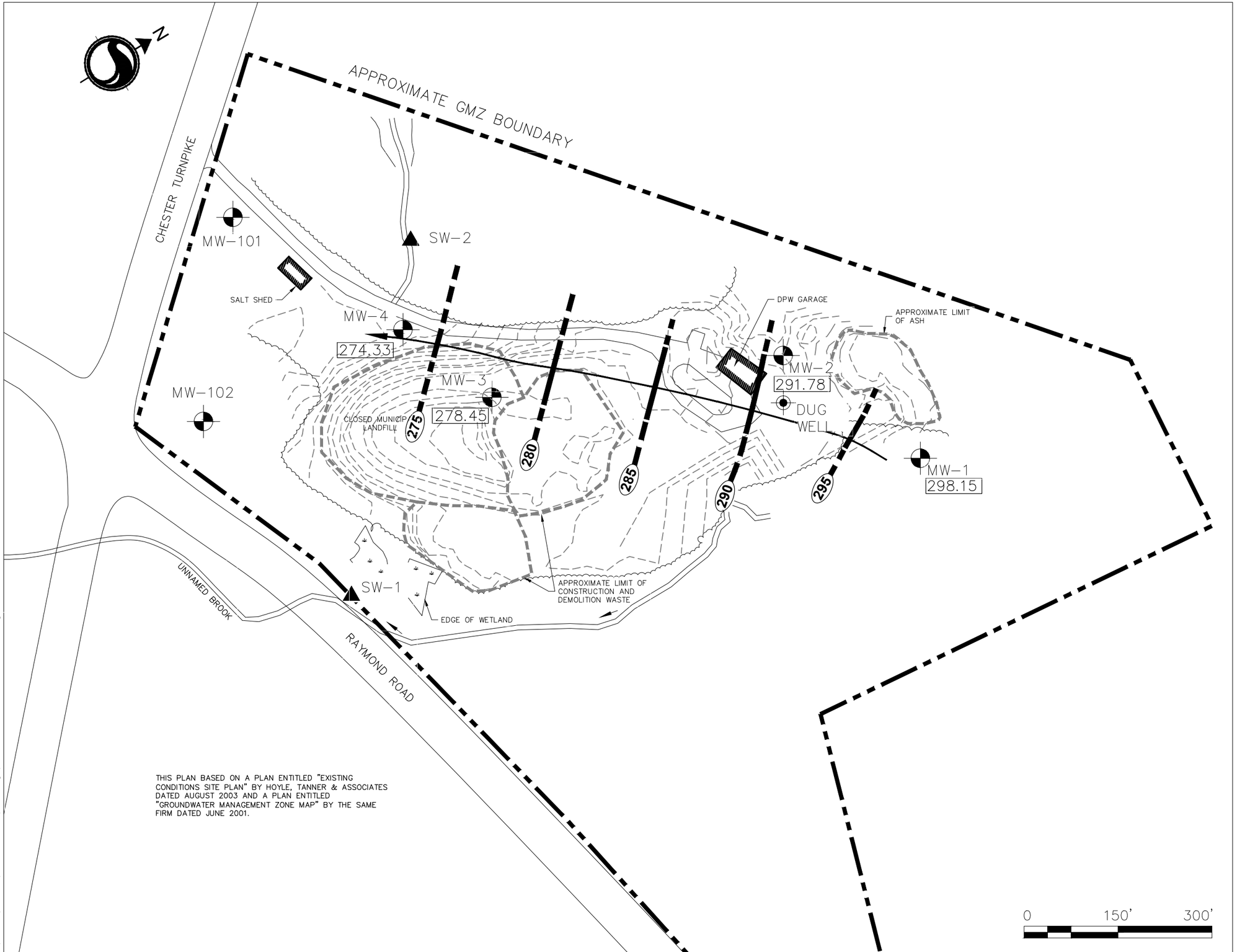

THIS PLAN BASED ON A PLAN ENTITLED "EXISTING CONDITIONS SITE PLAN" BY HOYLE, TANNER & ASSOCIATES DATED AUGUST 2003 AND A PLAN ENTITLED "GROUNDWATER MANAGEMENT ZONE MAP" BY THE SAME FIRM DATED JUNE 2001.

V:\1917\active\191710504\Drawing\AUBURN LF SITE 2-3-21.dwg

Stantec

Stantec Consulting Services Inc.
5 Dartmouth Drive, Suite 200
Auburn NH 03032 U.S.A.
Tel. 603.669.8672
Fax. 603.669.7636
www.stantec.com

Consultants

Legend

- MW-1 — Monitoring well location
- SW-2 — Surface Water Sample location
- 298.47 — Groundwater measurements collected April 23, 2020
- 275 — Groundwater Contour
- Inferred Direction of Ground Water Flow
- Woods

Notes

Revision	By	Appd.	YY.MM.DD

Issued	By	Appd.	YY.MM.DD

File Name: AUBURN LF SITE 2-3-21.dwg	DJP			JUN, 2016
	Dwn.	Chkd.	Dsgn.	YY.MM.DD

Permit-Seal

Client/Project

TOWN OF AUBURN, NH

LANDFILL CLOSURE MONITORING

AUBURN, NEW HAMPSHIRE

Title

SITE PLAN

Project No.	Scale	
191710504	1"=150'	
Drawing No.	**Sheet**	**Revision**
2	1 of 1	0

Auburn Landfill

List of PFAS Isomers to be Reported

PFAS Isomer Name	Abbreviation	CAS Number
PERFLUOROBUTANESULFONIC ACID	PFBS	375-73-5
PERFLUOROBUTANOIC ACID	PFBA	375-22-4
PERFLUORODECANE SULFONATE	PFDS	30783
PERFLUORODECANOIC ACID	PFDA	335-76-2
PERFLUORODODECANOIC ACID	PFDOA	307-55-1
PERFLUOROHEPTANE SULFONATE	PFHPS	375-92-8
PERFLUOROHEPTANOIC ACID	PFHPA	375-85-9
PERFLUOROHEXANESULFONIC ACID	PFHXS	355-46-4
PERFLUOROHEXANOIC ACID	PFHXA	307-24-4
PERFLUORONONANOIC ACID	PFNA	375-95-1
PERFLUOROTETRADECANOIC ACID	PFTEDA	376-06-7
PERFLUORO-N-TRIDECANOIC ACID	PFTRDA	72629-94-8
PERFLUOROOCTANESULFONIC ACID	PFOS	1763-23-1
PERFLUOROOCTANOIC ACID	PFOA	335-67-1
PERFLUOROOCTANESULFONAMIDE	FOSA	754-91-6
PERFLUOROPENTANOIC ACID	PFPEA	2706-90-3
PERFLUOROUNDECANOIC ACID	PFUNA	2058-94-8
2-(N-ETHYLPERFLUORO-A-OCTANESULFONAMIDO)-ETHANO	N-ETFOSE	1691-99-2
2-(N-METHYLPERFLUORO-A-OCTANESULFONAMIDO)-ETHANO	N-MEFOSE	24448-09-7
6:2 FLUOROTELOMERSULFONATE	6:2 FTS	17619-97-2
8:2 FLUOROTELOMERSULFONATE	8:2 FTS	39635
ETHYLPERFLUORO-1-OCTANESULFONAMIDE	N-ETFOSA	4151-50-2
METHYLPERFLUORO-1-OCTANESULFONAMIDE	N-MEFOSA	31506-32-8
2,3,3,3-TETRAFLUORO-2(HEPTAFLUOROPROPOXY)PROPANOIC ACID	HFPO-DA	13252-13-6

PROFESSIONAL SERVICES TERMS AND CONDITIONS

The following Terms and Conditions are attached to and form part of a proposal for services to be performed by Consultant and together, when the Client authorizes Consultant to proceed with the services, constitute the Agreement. Consultant means the Stantec entity issuing the Proposal.

DESCRIPTION OF WORK: Consultant shall render the services described in the Proposal (hereinafter called the "Services") to the Client.

DESCRIPTION OF CLIENT: The Client confirms and agrees that the Client has authority to enter into this Agreement on its own behalf and on behalf of all parties related to the Client who may have an interest in the Project.

TERMS AND CONDITIONS: No terms, conditions, understandings, or agreements purporting to modify or vary these Terms and Conditions shall be binding unless hereafter made in writing and signed by the Client and Consultant. In the event of any conflict between the Proposal and these Terms and Conditions, these Terms and Conditions shall take precedence. This Agreement supercedes all previous agreements, arrangements or understandings between the parties whether written or oral in connection with or incidental to the Project.

COMPENSATION: Payment is due to Consultant upon receipt of invoice. Failure to make any payment when due is a material breach of this Agreement and will entitle Consultant, at its option, to suspend or terminate this Agreement and the provision of the Services. Interest will accrue on accounts overdue by 30 days at the lesser of 1.5 percent per month (18 percent per annum) or the maximum legal rate of interest. Unless otherwise noted, the fees in this agreement do not include any value added, sales, or other taxes that may be applied by Government on fees for services. Such taxes will be added to all invoices as required.

NOTICES: Each party shall designate a representative who is authorized to act on behalf of that party. All notices, consents, and approvals required to be given hereunder shall be in writing and shall be given to the representatives of each party.

TERMINATION: Either party may terminate the Agreement without cause upon thirty (30) days notice in writing. If either party breaches the Agreement and fails to remedy such breach within seven (7) days of notice to do so by the non-defaulting party, the non-defaulting party may immediately terminate the Agreement. Non-payment by the Client of Consultant's invoices within 30 days of Consultant rendering same is agreed to constitute a material breach and, upon written notice as prescribed above, the duties, obligations and responsibilities of Consultant are terminated. On termination by either party, the Client shall forthwith pay Consultant all fees and charges for the Services provided to the effective date of termination.

ENVIRONMENTAL: Except as specifically described in this Agreement, Consultant's field investigation, laboratory testing and engineering recommendations will not address or evaluate pollution of soil or pollution of groundwater.

PROFESSIONAL RESPONSIBILITY: In performing the Services, Consultant will provide and exercise the standard of care, skill and diligence required by customarily accepted professional practices normally provided in the performance of the Services at the time and the location in which the Services were performed.

INDEMNITY: The Client releases Consultant from any liability and agrees to defend, indemnify and hold Consultant harmless from any and all claims, damages, losses, and/or expenses, direct and indirect, or consequential damages, including but not limited to attorney's fees and charges and court and arbitration costs, arising out of, or claimed to arise out of, the performance of the Services, excepting liability arising from the sole negligence of Consultant.

LIMITATION OF LIABILITY: It is agreed that the total amount of all claims the Client may have against Consultant under this Agreement, including but not limited to claims for negligence, negligent misrepresentation and/or breach of contract, shall be strictly limited to the lesser of professional fees paid to Consultant for the Services or $50,000.00. No claim may be brought against Consultant more than two (2) years after the cause of action arose. As the Client's sole and exclusive remedy under this Agreement any claim, demand or suit shall be directed and/or asserted only against Consultant and not against any of Consultant's employees, officers or directors.

Consultant's liability with respect to any claims arising out of this Agreement shall be absolutely limited to direct damages arising out of the Services and Consultant shall bear no liability whatsoever for any consequential loss, injury or damage incurred by the Client, including but not limited to claims for loss of use, loss of profits and/or loss of markets.

Liability of Consultant shall be further limited to such sum as it would be just and equitable for Consultant to pay having regard to the extent of its responsibility for the loss or damage suffered and on the assumptions that all other consultants and all contractors and sub-contractors shall have provided contractual undertakings on terms no less onerous than those set out in this Agreement to the Client in respect of the carrying out of their obligations and have paid to the Client such proportion of the loss and damage which it would be just and equitable for them to pay having regard to the extent of their responsibility.

DOCUMENTS: All of the documents prepared by or on behalf of Consultant in connection with the Project are instruments of service for the execution of the Project. Consultant retains the property and copyright in these documents, whether the Project is executed or not. These documents may not be used for any other purpose without the prior written consent of Consultant. In the event Consultant's documents are subsequently reused or modified in any material respect without the prior consent of Consultant, the Client agrees to defend, hold harmless and indemnify Consultant from any claims advanced on account of said reuse or modification.

Any document produced by Consultant in relation to the Services is intended for the sole use of Client. The documents may not be relied upon by any other party without the express written consent of Consultant, which may be withheld at Consultant's discretion. Any such consent will provide no greater rights to the third party than those held by the Client under the contract, and will only be authorized pursuant to the conditions of Consultant's standard form reliance letter.

Consultant cannot guarantee the authenticity, integrity or completeness of data files supplied in electronic format ("Electronic Files"). Client shall release, indemnify and hold Consultant, its officers, employees, Consultant's and agents harmless from any claims or

damages arising from the use of Electronic Files. Electronic files will not contain stamps or seals, remain the property of Consultant, are not to be used for any purpose other than that for which they were transmitted, and are not to be retransmitted to a third party without Consultant's written consent.

FIELD SERVICES: Consultant shall not be responsible for construction means, methods, techniques, sequences or procedures, or for safety precautions and programs in connection with work on the Project, and shall not be responsible for any contractor's failure to carry out the work in accordance with the contract documents. Consultant shall not be responsible for the acts or omissions of any contractor, subcontractor, any of their agents or employees, or any other persons performing any of the work in connection with the Project. Consultant shall not be the prime contractor or similar under any occupational health and safety legislation.

GOVERNING LAW/COMPLIANCE WITH LAWS: The Agreement shall be governed, construed and enforced in accordance with the laws of the jurisdiction in which the majority of the Services are performed. Consultant shall observe and comply with all applicable laws, continue to provide equal employment opportunity to all qualified persons, and to recruit, hire, train, promote and compensate persons in all jobs without regard to race, color, religion, sex, age, disability or national origin or any other basis prohibited by applicable laws.

DISPUTE RESOLUTION: If requested in writing by either the Client or Consultant, the Client and Consultant shall attempt to resolve any dispute between them arising out of or in connection with this Agreement by entering into structured non-binding negotiations with the assistance of a mediator on a without prejudice basis. The mediator shall be appointed by agreement of the parties. The Parties agree that any actions under this Agreement will be brought in the appropriate court in the jurisdiction of the Governing Law, or elsewhere by mutual agreement. Nothing herein however prevents Consultant from any exercising statutory lien rights or remedies in accordance with legislation where the project site is located.

ASSIGNMENT: The Client shall not, without the prior written consent of Consultant, assign the benefit or in any way transfer the obligations under these Terms and Conditions or any part hereof.

SEVERABILITY: If any term, condition or covenant of the Agreement is held by a court of competent jurisdiction to be invalid, void, or unenforceable, the remaining provisions of the Agreement shall be binding on the Client and Consultant.

FORCE MAJEURE: Any default in the performance of this Agreement caused by any of the following events and without fault or negligence on the part of the defaulting party shall not constitute a breach of contract, labor strikes, riots, war, acts of governmental authorities, unusually severe weather conditions or other natural catastrophe, disease, epidemic or pandemic, or any other cause beyond the reasonable control or contemplation of either party. Nothing herein relieves the Client of its obligation to pay Consultant for services rendered.

COVID-19: The parties acknowledge the ongoing COVID-19 pandemic and agree that the fee and schedule in the proposal does not include any schedule or cost impact that may occur as a result thereof. To the extent that there are cost or schedule impacts resulting from the COVID-19 pandemic, Stantec shall be entitled to an equitable change order.

CONTRA PROFERENTEM: The parties agree that in the event this Agreement is subject to interpretation or construction by a third party, such third party shall not construe this Agreement or any part of it against either party as the drafter of this Agreement.

Town of Auburn

Town Hall
47 Chester Road
P.O. Box 309
Auburn, NH 03032

Town Administrator

William G. Herman, CPM
Phone: (603) 483-5052 Ext. 111
Fax: (603) 483-0518
E-Mail:
townadmin@townofauburnnh.com

To: Board of Selectmen

From: Bill Herman, CPM, Town Administrator
Date: February 12, 2021
Re: Potential Increased State and Federal Revenues for Municipalities

During the past week there have been several announcements that provide the potential of positive news for municipalities for the coming year in terms of both state and federal revenue sources. The announcements involve Rooms and Meals tax revenues from the State, and federal Covid-19 Relief funding and FEMA funding related to Covid-19 disaster declaration from the federal government.

Rooms & Meals Tax Revenue: On February 11th, Governor Sununu delivered his biennial budget address to the Legislature, outlining what he is proposing in the next State budget. Nearly the first item he addressed was increased revenues to Granite State cities and town by increasing the amount of funds sent directly to municipalities from the Rooms & Meals Tax.

Currently, $68.8 million per year is what is sent to cities and towns. In both years of the next biennium, the Governor increases that amount by $5 million (in 2022 - $68.8 million up to $73.8 million and in 2023 - $73.8 million up to $78.8 million). The Governor's Budget Director has indicated to officials at the NH Municipal Association the current level of funds ($68.8 million) is the minimum amount that will go out, and the proposed increases are dependent upon overall increased revenues in Rooms & Meals tax collections.

While there is potential increased revenue from this source, the Governor's budget proposal also reduces funding for the Highway Block Grant program by $3.1 million in 2022, while the State Bridge Aid Program is also reduced from its historic $6.8 million funding level to $6 million.

Covid-19 Relief Funding: As media outlets have widely reported, the Biden Administration and Congress is developing a $1.9 trillion Covid-19 Relief package, which could send upwards of $1.6 billion in funding to New Hampshire.

The current proposal working its way through the Congress would include direct funds to local governments, meaning counties, cities, towns and village districts. The funding formulas are being worked on, but current reports are there would be as much as $559 million to local governments in New Hampshire. Auburn is likely to be included with communities that generally do not meet Community Development Block Grant funding standards and would be splitting approximately $19.5 billion in direct funding.

Unlike past federal funds, state and local governments would be allowed to use these funds to make up revenue lost or delayed because of the pandemic.

FEMA Disaster Funding: Within the past week or so, the Biden Administration has announced the Federal Emergency Management Agency (FEMA) would cover 100% of the expenses incurred and claimed by local governments for the Covid-19 pandemic disaster declaration that was issued in March 2020. Normally, FEMA covers 75% of these expenses with the state and local government responsible for the remaining 25%.

During a weekly conference call on February 11th, the Director of the NH Division of Homeland Security and Emergency Management reported they have received the same announcement concerning FEMA covering 100% of claimed expenses, but they have not received the follow-up guidance documents and information from FEMA that will indicate what expenses will be allowed and how we are supposed to claim them. She indicated that once they receive that guidance, they will provide it to the local communities.

Until the guidance is received, she encouraged local communities to keep track and records of their expenses to ultimate help in documenting the expenses.

The Rooms & Meals revenue and the Covid-29 Relief Funding from the federal government are intended to be anticipated revenues that would assist local officials in meeting municipal expenses. The 100% FEMA coverage is funding that is intended to fully reimburse local governments for costs they incurred and is not consider to be new money for additional expenses.

There is still a lot of work to take place at both the State and Federal levels to bring these items to fruition and benefit to local governments and their taxpayers. And we will keep an eye on these items to keep the Board informed. But at this early juncture, they all indicate at least a recognition local government is a partner at the table. As the Governor indicated in his Budget Address, the State is going to shift cash down to the cities and towns, and not unfunded mandates.

Thank you for your consideration.

Town of Auburn
Board of Selectmen
February 8, 2021
Minutes
7:00 PM

Selectmen Present: Keith Leclair, Todd Bedard and Michael Rolfe

Others Present: Fire Chief Michael Williams, Police Chief Ray Pelton, Lieutenant Charles Chabot, Michael DiPietro, Melanie Labonte, Tax Collector Sue Jenkins, Finance Director Adele Frisella, and Nancy Hoijer, Recording Secretary

Call to Order – Pledge of Allegiance

Mr. Leclair called the meeting to order at 7:01 PM and led the Pledge of Allegiance. Mr. Leclair noted one addition to the agenda, the report of the Fire Chief.

Approval of Accounts Payable Manifest for the week of February 8, 2021 - $1,139,835.26

Mr. Bedard motioned to approve the Accounts Payable Manifest for the week of February 8, 2021 in the amount of $1,139,835.26. Mr. Rolfe seconded the motion. A vote was taken, all were in favor, the motion passed unanimously.

Approval of Accounts Payable Manifest for the week of February 8, 2021 - $3,080

Mr. Bedard motioned to approve the Accounts Payable Manifest for the week of February 8, 2021 in the amount of $3,080. Mr. Leclair seconded the motion. A vote was taken, Mr. Rolfe abstained, Mr. Leclair voted aye, and Mr. Bedard voted aye. The motion passed 2-0-1.

Approval of Payroll Manifest for the week of February 1, 2021 - $47,847.47

Mr. Bedard motioned to approve the Payroll Manifest for the week of February 1, 2021 in the amount of $47,847.47. Mr. Rolfe seconded the motion. A vote was taken, all were in favor, the motion passed unanimously.

Approval of Consent Agenda for the week of February 8, 2021

Mr. Leclair read out loud and offered for inspection the Consent Agenda for the week of February 8, 2021 which included: An abatement/refund request and nine (9) pistol/revolver licenses.

Mr. Bedard motioned to approve the Consent Agenda for the week of February 8, 2021. Mr. Rolfe seconded the motion. A vote was taken, all were in favor, the motion passed unanimously.

Appointments with the Board

Fire Chief Michael Williams – Monthly Report

Chief Williams presented the monthly report of the Fire Department for the month of January 2021. Chief Williams noted calls for service were down last month to 48. In 2020 calls for service were up 13% from 2019. All officers are out of quarantine.

Chief Williams reported he has been working on the portable radio grant that is due on February 12th. The life/safety database with Red Alert is being set up to replace the Firehouse software. The Department attended the Planning Board meeting to update a section of the zoning ordinance.

Chief Williams reported a new call firefighter, Duncan Britton, was hired, and is an Auburn resident with medical training. Deputy Chief Selinga is working on a policy to add an in-house Chaplain. Captain Glennon is working on cleaning up apparatus bays at Station 2. The Ladder 1 jack sensor was repaired. Lieutenant Barsaleau is working on training. Lieutenant Dignard is working on small tools and equipment. Lieutenant Szatynski is working with Beltronics to demo new portable radios and Lieutenant Sullivan is keeping the PPE supplies up.

Town Response to COVID-19 and State of Emergency Declaration

General Update on Town Issues

Chief Pelton reported 18 active cases in Auburn of COVID-19 which is down from 65. One Police Officer is out on quarantine. All officers are due for their second vaccine. After the second vaccine has time to work no one will need to be quarantined following an exposure. The weekly FROST testing caught three positives with no symptoms. The supply of PPE is good.

Chief Pelton and Chief Williams noted that DHHS is looking for manpower from the Departments to administer shots. Mr. Leclair questioned the Town's liability. Chief Pelton noted those interested could sign up directly with the State. Chief Williams will submit a roster. Participants would register for classes. Detail rules would apply. A contract would be signed similar to mutual aid and be signed by the first responder organization. Chief Pelton provided a copy of the contract. Mr. Bedard noted there have been no issues for years and he was okay with it. Mr. Rolfe noted he was glad the

Town could help. Mr. DiPietro noted there is less liability than with other details and services provided by the EMTs on a daily basis.

Mr. Leclair motioned to authorize the Town of Auburn to enter into an agreement with NH DHHS for distribution of COVID-19 vaccine aid and to authorize the Department Heads to sign the agreement. Mr. Bedard seconded the motion. A vote was taken, all were in favor, the motion passed unanimously.

Chief Pelton noted there could be regional administration of vaccines in the future for Town residents to take place in Town which would be set up by Manchester at a time when there are enough vaccines.

New Business

Paving Proposal

A letter dated December 11, 2020 from Bill Gelinas at Advanced Excavating & Paving set forth the paving prices for the Town of Auburn in 2021 based on current NHDOT posting for liquid asphalt.

Mr. Bedard motioned to approve the 2021 paving prices from Advanced Excavating & Paving as presented and to authorize Chairman Keith Leclair to sign the agreement on behalf of the Board. Mr. Rolfe seconded the motion. A vote was taken, all were in favor, the motion passed unanimously.

Mr. Rolfe will follow up with Mr. Gelinas to get a signature page. The Board would like to compare last year's prices.

CAI Agreement

A letter from Franco Rossi, President of CAI Technologies dated January 4, 2021 relative to the annual renewal agreement was reviewed by the Board. Mr. Leclair noted he was not in favor of an auto-renew clause which required the Town and to notify CAI within 30 days of non-renewal. Mr. Rolfe noted CAI would be required to notify the Town of any price increase. Mr. Bedard agreed it was a good idea to have the opportunity to have the agreement put in front of the Board to review each year.

The Board was agreeable to continue with the current program. Mr. Leclair will follow up on the auto renewal clause requirement.

Annual Customer Notice from Comcast

A letter from Bryan Christiansen of Xfinity dated January 28, 2021 was reviewed by the Board relative to the Town's communication services.

Repair of Town Hall Parking Lot Lights

Mr. Leclair noted a couple of lights are out in the parking lot. Ms. Frisella will follow up with Glenn Shaw of Auburn Electric.

Repair at Safety Complex

Chief Pelton provided the Board with an invoice from AAA Energy Service dated January 22, 2021 in the amount of $1,306.29 for repair of a leaking pipe in the ceiling above the training room. The taco zone valve had failed and needed replacement.

Mr. Bedard motioned to approve the invoice from AAA Energy for repairs at the Safety Complex in the amount of $1,306.29 to be paid from the Town Building Fund. Mr. Rolfe seconded the motion. A vote was taken, all were in favor, the motion passed unanimously.

Application for Zoning Board Alternate

Mr. Leclair indicated Patrick Bergeron, who is a candidate running to serve on the Police Commission and attended the Citizen's Academy, is interested in serving as an alternate member on the Zoning Board of Adjustment.

Mr. Bedard motioned to appoint Patrick Bergeron as an alternate to the Zoning Board of Adjustment with a term to expire in March 2024. Mr. Rolfe seconded the motion. A vote was taken, all were in favor, the motion passed unanimously.

Thank You Letter – AFD & APD

A letter from Jim Broderick was received by the Board thanking Massachusetts resident Sam Stys, the Auburn Fire Department, Auburn Police Department, Ambulance medial team and the Town of Auburn for rescuing him after he fell through the ice at Lake Massabesic in January while cross-country skiing. The Fire Department also had to pull Mr. Stys to safety along with his Aunt's dog who had by then also fallen through the ice after freeing Mr. Broderick from the boots and skis which kept him submerged. Mr. Broderick stated that he struggled to free himself from the ski bindings for about 15 minutes submerged in the cold water while hypothermia set in and credited Mr. Stys and both Departments for saving his life.

Covid Leave Policy

Chief Pelton noted the federal requirement to provide employees with up to two weeks paid leave and expanded FMLA coverage if needed for a Covid-related issue ended as of December 31, 2020. The Board discussed whether the Town should implement a policy or leave it to the discretion of the Department Heads and review on a case-by-case basis. Mr. Leclair noted the Town's employees included salaried workers, hourly workers, union workers and non-union workers. Mr. Bedard noted each job position could be treated differently, but not based on race or gender. Ms. Frisella noted work-

related Covid issues are covered by Workers Compensation which typically reimburses at 66% of wages in addition to covering medical expenses.

The Board agreed the Department Heads would decide and a single member of the Board of Selectmen, Mr. Leclair, would serve as arbitrator. Chief Pelton and Chief Williams noted agreement.

Old Business

Street Light Repairs

Mr. Bedard reported the street lights on Dearborn and Route 121 have been repaired.

Mr. Rolfe reported Eversource was out to look at the power supply to the street light at Rattlesnake and Wilson Crossing but did not know if the light itself was now working. Mr. Leclair will drive past to inspect it and follow-up if necessary.

Safety Complex Insulation

Mr. Rolfe reported he received an email from Eversource who noted the Town is on their list for energy evaluation, but they are busy. Mr. Leclair noted the insulation at the Safety Complex is a summer job at this point and work will commence then.

Request to Encumber Funds for Library Study

Mr. Leclair noted the Griffin Free Public Library had requested to encumber funds for the Library Study at the Board of Selectmen's last meeting and the Board questioned whether the amount requested was sufficient. Ms. Frisella noted the encumbrances are done together and she will bring them forward once they are finalized.

Mr. Leclair noted in addition to the $10,000 encumbrance request for the Library Study, $1,298 would be due to the Turner Group, totaling $11,298.

Finance Assistant Position

Mr. Bedard motioned to accept the recommendation from current Finance Assistant Patricia Rousseau to hire Amanda Friolet as Finance Assistant for the Town of Auburn and to assign to Ms. Friolet Labor Grade 7, Step 8. Mr. Rolfe seconded the motion. A vote was taken, all were in favor, the motion passed unanimously.

Report/Comments of Ex-Officio Board Representatives

Mr. Bedard reported Parks & Recreation met and discussed the budget and upcoming events such as senior dinners, the ski program, use of fields at Wayne Eddows and the Safety Complex. Mrs. Lachance hopes to hold "Safety Day" and the Duck Race this year if the Covid situation allows. Some issues were reported with one of the cameras at Wayne Eddows which may need to be moved closer to have a better view of the parking lot.

Mr. DiPietro discussed the access at the boat launch, after hours activities and dumping. Chief Pelton noted he believed the agreement with the State allows for 24 - hour access so that gating it is not an option.

Other Business

Mr. Rolfe noted Ray Racicot had requested to put up signs while working on Town property. The Board agreed that Mr. Rolfe will have Mr. Racicot put up a "No authorized vehicles" sign.

Next Meeting/Events

Monday, February 22, 2021 Board of Selectmen's Meeting – 7 PM
Monday, March 8, 2021 Board of Selectmen's Meeting – 7 PM
Tuesday, March 9, 2021 Town Election – 7 AM – 7 PM

Minutes

January 25, 2021 – Public Meeting Minutes

Mr. Bedard motioned to approve the January 25, 2021 Public Meeting Minutes. Mr. Rolfe seconded the motion. A vote was taken, all were in favor, the motion passed unanimously.

January 25, 2021 – Non-Public Meeting Minutes

Mr. Bedard motioned to approve the January 25, 2021 Non-Public Meeting Minutes. Mr. Rolfe seconded the motion. A vote was taken, all were in favor the motion passed unanimously.

Non-Public Session pursuant to RSA 91-A:3, II (a), (c) and (d) compensation of a public employee, reputation of someone other than a Board member and consideration of the acquisition or sale of real estate

Mr. Leclair motioned to go into non-public session pursuant to RSA 91-A:3, II (a), (c) and (d) compensation of a public employee, reputation of someone other than a Board member and consideration of the acquisition or sale of real estate. Mr. Bedard seconded the motion. A roll call vote was taken Mr. Bedard – aye, Mr. Leclair – aye and Mr. Rolfe – aye. The motion passed unanimously.

The meeting room was closed to the public at 8:31 PM.

Mr. Leclair motioned to come out of non-public session at 9:11 PM. Mr. Bedard seconded the motion. A vote was taken, all were in favor, the motion passed unanimously.

Mr. Leclair moved to seal the minutes of the non-public sessions. Mr. Bedard seconded the motion. A vote was taken, all were in favor, the motion carried unanimously.

Adjourn

Mr. Leclair motioned to adjourn at 9:11 PM. Mr. Bedard seconded the motion. A vote was taken, all were in favor, the motion passed unanimously.

Respectfully submitted,

Nancy Hoijer
Recording Secretary