Avitar Associates of New England, Inc.

Municipal Services Company

Auburn, NH

2013 VALUATION UPDATE

April 1, 2013

Avitar Associates of New England, Inc.
150 Suncook Valley Highway • Chichester, NH 03258 • (603) 798-4419
www.avitarassociates.com

Index

Manual V3.15

Introduction 1
Intended Use/User 2

Section 1. **Certification/Contract & Scope of Work** 3
- **A. Certification** 5
- **B. Scope of Work Contract** 9
- **C. Personnel & Qualifications** 23
- **D. Data Collection.** 27

Section 2. **Prior DRA General Statistics** 59

Section 3. **Valuation Premise** 63
- **A. Three Approaches to Value/Highest & Best** 65
- **B. Zoning** 69
- **C. Town Parcel Breakdown** 99
- **D. Time Trending** 100
- **E. Neighborhood Classification** 101
- **F. Basic Mass Appraisal Process** 104
- **G. Assumptions, Theories & Limiting Factors** 105
- **H. Telecommunications & Utilities Value** 106

Section 4. **CAMA System** 109
- **A. Introduction to the Avitar CAMA System** 111

Section 5. **CAMA Appraisal Review Card & Abbreviations, Samples & Definitions** 119

Section 6. **Sales Data** 139
- **A. Date Range of Sales & Effective Date of New Value** 141
- **B. Qualified & Unqualified Sales Report** 143

Section 7. **Preliminary Sales Analysis Spreadsheets** 153

Section 8. **Field Review & Informal Hearing Process** 161
- **A. Field Review** 163
- **B. Informal Hearing Process** 165

Section 9. **Calibration Technique, Final Statistical Analysis & Value Cost Tables** 167
- **A. Calibration Technique** 169
- **B. Final Statistical Analysis & Testing** 173
- **C. Final Valuation Cost Tables** 373

Section 10. **Waterfront & View & Building Grade Information** 391
- **A. Waterfront Report** 393
- **B. View Report** 403
- **C. Building Grade Report** 419

INTRODUCTION

The purpose of this report is to document the guidelines, standards and procedures used in the recent town wide revaluation. The building cost data and the specific building and land information of each property, which is the foundation for this report and the valuation, were gathered and/or verified by the appraisal staff of Avitar Associates of N.E., Inc., all qualified to do so and approved by the New Hampshire Department of Revenue, Property Appraisal Division, (See Section 1.C.). Sources include local builders and developers, as well as the use of cost manuals, such as the Marshall & Swift Manual.

We use a data collection card to facilitate the listing and pricing of buildings which will insure uniformity and accuracy in the collection of data and use of the CAMA system. See Section 1.D. Data Collection.

It should be kept in mind that nothing can replace common sense and experience. While this report is a guide to information about the revaluation and the resulting assessments, one needs to keep in mind that an assessment is an opinion of value, based on information contained herein and the knowledge and experience of the assessor. This is simply a guideline.

An appraisal is an estimate of value at a point in time. Value is a moving target based on the actions of the market buyers and sellers and what they are willing to pay and accept for any individual property. As such, the assessment as of April 1st, (the assessment date for the State of New Hampshire), is not a fact, but rather an opinion of value based on all the local sales data and the social and economic forces observed in the community and represents a "reasonable" assessment that, while likely never matching another assessors opinion of value, should be reasonably close, assuming each opinion of value is factual and accurately established, generally meaning +/- about 10%.

There is no area of appraising where this judgement of value becomes more evident than in the valuation of land and its amenities, such as view, waterfront and neighborhood/location.

Land values are local. They cannot be compared to values of similar properties in other localities with any known accuracy. This suggests that the most valuable tool in arriving at a judgement of land value is going to be the local market. For any land valuation method to work, it must be based on local market sales, as the social and economic values and condition of each community is different.

Adjustments for topography, shape and cost to develop vary greatly, as each property is unique. However, a review or comparison of these properties will show a relationship exists between the adjustment and severity of topography, shape and site development costs, based on the opinion of the revaluation supervisor and local sales data.

The contributory value of views, while based on sales data, also varies widely as do the views. The relationship between the value added, based on sales having views, compared to other property in town with views is shown by the View Sample Pictures (Section 10.). This section aides in the application of adjustment for views, as well as shows consistency in the process. However, sales data never accounts for every variation of view or value adding feature or deduction for that matter that the job supervisor may come across in any given town. As such, experience and knowledge of the local sales must be used to assess these unique properties and make adjustments for the severity of the feature affecting value in his or her opinion and then consistently apply that condition.

Intended Use of Report

The intended use of the report is to be a tool for local assessing officials to understand how the assessments were developed. To help them feel comfortable that the values are well founded and equitable, as well as help in the future assessment of new homes and maintenance of property values.

It is not intended to make the reader an assessor, but rather help the reader understand the process. It is intended to document the facts, assumptions and data used for their review and use in understanding and explaining the revaluation process.

The use of this report is to present the foundation of the recent revaluation and the process and procedures used to develop the assessed values for all property in town.

Intended Users of Report

Intended users include, local assessing officials and real estate appraisers and other assessors.

It may also be used by the public on a more general level to understand the process, facts and methods used to estimate values.

What This Report is Not Intended to Do

It is not intended to answer any and all possible questions, but rather to document the revaluation in general terms and enable the local assessor to answer more detailed questions which may not be readily apparent to the average property owner.

SECTION 1

CERTIFICATION/CONTRACT & SCOPE OF WORK

A. CERTIFICATION

B. CONTRACT & SCOPE OF WORK

C. PERSONNEL & QUALIFICATIONS

D. DATA COLLECTION

CERTIFICATION

Dear Board Members:

The attached Revaluation Report is hereby provided to the Town of Auburn for an effective date of new values of 4/1/2013.

Avitar appraised all taxable property (fee simple) within the municipality according to NH Revised Statute 75:1 and appraised all tax exempt and non-taxable property within the jurisdiction of this municipality in the same manner as taxable property. Avitar verified all sales used as a benchmark for this town wide valuation process. When developing the value of a leased fee estate or a leasehold estate, we analyze the effect on value, if any, #1 the terms and conditions of the lease, and #2 the effect on value, if any, of the assemblage of the various parcels, divided interest or component parts of a property. The resulting assessments are my opinion as of the effective date of this agreement, of each property's most probable market value based on all of the local sales data analyzed and my experience with and opinion of that data, as well as, similar circumstances experienced elsewhere.

I hereby certify that to the best of my knowledge and belief, the following:

- The statements of fact contained in this report are true and correct.
- The reported assumptions and limiting conditions are my impartial and unbiased professional analyses, opinions and conclusions.
- I have no present or prospective interest in any property that is the subject of this report and I have no personal interest with respect to the parties involved, nor any bias with respect to any property that is the subject of this report or to the parties involved with this assignment.
- My engagement in this assignment and compensation for completing this task, although contingent upon developing and reporting predetermined statistical results was not contingent upon the resulting assessment of any individual property.
- My analyses, opinions and conclusions were developed and this report has been prepared in conformity with the NH State Law in affect as of the date of the signed contract, to the best of my knowledge.
- I **have** made a personal viewing of the properties, per the contract and scope of services agreement, (*Section 1B of this manual*) that are the subject of this report and I or members of my staff have inspected each building's interior when allowed.
- I certify that the total taxable value of the town is $679,874,068.

Signature: Amy Martin **Date:** 7-23-13

RESUME' OF SUPERVISOR OR SIGNOR

Loren J. Martin
Avitar Associates
150 Suncook Valley Highway
Chichester, NH 03258

Experience:

2005 - Present **President Assessing Operations, Avitar Associates, Chichester, NH**
- Oversee Assessing Staff of +/- 15 Employees
- Day to Day Operations
- Budgeting/Planning
- Court Preparation & Defense
- Oversee all facets of revaluation work/schedules & staff

8/03 – 2005 **Assessor & District Manager, Avitar Associates of NE, Inc. Chichester, NH**
- Contract Assessor/Administrator to Misc. Communities in NH
- Oversee all Facets of Revaluation Work & Staff
- Measure & List All Classes of Property
- Extensive Work with CAMA System, Training on the CAMA System and Misc. Report Writing, Microsoft Office Products and Seagate Crystal Reports
- Administer State Statutes
- Integration with Tax Collector & Billing Systems/Warrant Processing
- Abatement Requests
- Building Permit Work - New Construction & Pickup Work
- Sales Analysis & Sales Verification
- DRA Sales Ratio Study
- Exemptions, Current Use & Land Use Change Tax, Excavation Activity
- Court Preparation & Defense

9/01 – 9/03 **Real Estate Supervisor/District Manager, Nyberg, Purvis & Associates, Inc, Acton, ME**

8/96 – 8/01 **Field Assistant Assessor, Town of Merrimack, Merrimack, NH**

12/93 – 7/97 **Data Collector/Data Entry, Patriot Properties, Inc., Lynn, MA**

Education:
- AS in Business Administration, University of New Hampshire
- Notre Dame College, Manchester, NH - Core College Work
- Maine Central Institute, Pittsfield, ME - Class of 1988, College Prep Courses
- IAAO Course 101 – Appraisal Principles
- IAAO Course 102 – Income Approach to Value
- IAAO Course 300 – Mass Appraisal
- IAAO Course 400 – Assessment Administration
- NH State Statutes/2010 Update Class
- Workshop 151 Uniform Standards of Professional Appraisal Practice (USPAP)
- 2010 USPAP Update
- 2013 Statistics, Modeling & Finance
- DRA Exemption & Credit Workshop

Professional Designations or Affiliations:
- Certified NH Assessor #129
- State of NH Dept of Revenue, Certified Property Assessor Supervisor
- NHAAO – NH Association of Assessing Officials
- NRAAO – Northeast Regional Association of Assessing Officials
- IAAO – International Association of Assessing Officials
- Expert Witness Before the NH Board of Tax & Land Appeals
- Expert Witness in Belknap County

NEW HAMPSHIRE DEPARTMENT OF REVENUE ADMINISTRATION

THIS CERTIFIES THAT

Loren J. Martin

Has successfully completed and submitted the required documemation as required by state law to obtain status as a

CERTIFIED PROPERTY ASSESSOR SUPERVISOR

Which shall remain valid until December 31, 2016

Given this day of March 7, 2011

Stephan W. Hamilton, Director

SECTION 1

B. CONTRACT & SCOPE OF WORK

REVALUATION/UPDATE AGREEMENT

SUBJECT: Update of all taxable, tax exempt and non-taxable property for tax assessment purposes, in accordance with the standards set forth in the laws of the State of New Hampshire and Administrative Rules adopted by the Department of Revenue Administration (DRA) and the Assessing Standards Board (ASB), in effect at the time of execution.

Auburn, NH, a municipal corporation organized and existing under the laws of the State of New Hampshire, hereinafter called the Municipality; and **Avitar Associates of NE, Inc**, a business organization existing under the laws of the State of New Hampshire and having a principal place of business at **150 Suncook Valley Highway, Chichester, NH 03258** hereinafter called the Company, hereby mutually agree as follows:

GENERAL PROVISIONS

OCT 23 2012

1. IDENTIFICATION

1.1 Name of Municipality:	Town of Auburn
1.2 Address of Municipality:	P.O. Box 309
	Auburn, NH 03032
1.3 Contracting Officer for the Municipality:	Board of Selectmen
1.4 Telephone:	(603) 483-5052
1.5 Name of Company:	Avitar Associates of N.E., Inc.
1.6 Address of Company:	150 Suncook Valley Highway
	Chichester, NH 03258
1.7 Telephone:	(603) 798-4419
1.8 Name and Title of Company Signer:	Loren J. Martin, President of Assessing Operations
	or Gary J. Roberge, CEO

2. GENERAL SERVICES TO BE PERFORMED BY THE COMPANY

2.1 Appraise all property.

2.1.1 To appraise all taxable property within the municipality in a good and workmanlike manner according to New Hampshire Revised Statutes 75:1.

2.1.2 To appraise all tax exempt and non-taxable property within the taxing jurisdiction of the Municipality in the same manner as taxable property.

2.1.3 The Company will verify all sales used as benchmarks for the update process.

2.2 Completion of Work:

2.2.1 The company shall complete all work and deliver the same in final form to the Selectmen/Assessors on or before **10/1/2013** with assessments as of **4/1/2013**.

2.2.2 A penalty of **$35.00** per day shall be paid by the Company for each day required for completion beyond the above stated completion date for delays caused by the Company.

2.2.3 The re-assessment shall be considered complete and in its final form only when informal reviews have been complete, value changes made as required and the figures are submitted to and accepted by the Selectmen/Assessors. The Company shall provide the municipality with a full set of property record cards, the USPAP Standard 6 Compliant Manual and the CAMA Manual, if applicable.

2.3 Personnel.

2.3.1 The Company shall employ experienced and competent assessors who have been certified by the N.H. Department of Revenue Administration in accordance with the NH Code of Administrative Rules, ASB 303 for the work they will be performing.

2.3.2 The Company shall not compensate, in any way, a Municipal officer or employee or any member of the family of such officer or employee in the performance of any work under this contract.

2.3.3 Upon approval of the contract and before the update begins, the Company shall forward to the N.H. Department of Revenue Administration a list of the approved employees assigned to the update project.

2.3.4 The Company will ensure the DRA Certified Assessor Supervisor will be on the job site 50% of the time.

2.3.5 The Company will ensure that there will be no assigning of any part of the contract to anyone other than the Company without express written permission by the Town.

2.4 Public Relations.

The Company and the Municipality, during the progress of the work, shall use its best efforts and that of its employees to promote full cooperation and amiable relations with the taxpayers. All publicity and news releases will be cleared with the Selectmen/Assessors. The Company, upon request of the Municipality, will make available speakers to acquaint property owners with the nature and purpose of the update at a public forum scheduled by the Municipality, but not more than 4 during the course of the project.

2.5 Confidentiality.

2.5.1 The Company agrees to not disclose to anyone except the Selectmen/Assessors and the Commissioner of the N.H. Department of Revenue Administration or his/her designee, any preliminary values or new values discovered, for any purpose, or to permit anyone to use or peruse any of the data on file in connection with the update.

2.5.2 The Company agrees to furnish the New Hampshire Department of Revenue Administration staff member assigned to monitor the update reasonable requests for information made in writing.

2.6 Compensation and Terms.

The Municipality in consideration of the services hereunder to be performed by the Company agrees to pay to the Company the sum of **$17,500** dollars, in manner and form as follows:

2.6.1 Payment shall be made in monthly installments as the work progresses based on 90% of the estimated proportion of the work completed in the preceding month with the 10% balance being held and accumulated until final satisfactory completion of the update as defined in 2.2.3.

2.6.2 Payment shall be based on monthly progress reports submitted by the Company and accepted by the Municipality.

3. DETAIL SERVICES TO BE PERFORMED BY THE COMPANY

3.1 Development of Unit Costs:

3.1.1 The Company shall use Marshall & Swift Cost Manual as a basis to develop the costs of residential, commercial and industrial construction in the area and modify those costs by local sales, material costs and prevailing wage rates in the building trades. These shall include architects and engineer's fees, and contractor's overhead and profits. Before using such unit costs, the Company shall make tests using costs against actual sales of buildings whose actual current costs are known, in order to insure accuracy.

3.1.2 Residential Property Appraisal Schedules. The Company shall use unit cost as the basis of appraisal of residential properties. Schedules shall consist of unit base prices upon definite specifications for houses of various types and quality of construction and reflect the building customs and practices in the community. The schedules shall include adjustment for story height, square foot size and extra features, such as barns, garages, pools, fireplaces, etc.

3.2 Manual of Appraisal:

3.2.1 Final Appraisal Report. This report shall follow closely the 2012-13 edition of Uniform Standards of Appraisal Practice (USPAP) Standard 6. The report shall contain the following sections:

1. A Letter of Transmittal.
2. A Certification Statement.
3. A section including the contracted Scope of Work.
4. A section detailing sales, income, and cost approaches to value including all valuation premises.
5. A section including all tables pertinent to the valuation process along with any schedules for the valuation of residential, commercial, industrial, manufactured housing and exempt properties.
6. A section including statistical analysis and testing.

The Company shall instruct the Selectmen/Assessors in the use of the manual so that the Selectmen/Assessors will have an understanding of the appraisal process being utilized. Upon completion of the full revaluation, the Company shall deliver one electronic copy of the manual to the Selectmen/Assessors and one electronic copy to the DRA.

3.3 Property Record Cards:

3.3.1 The Company shall prepare property record cards 8-1/2 x 11 inches for each separate parcel of property in the municipality.

3.3.2 The cards shall be arranged based on the Town's CAMA system design, as to show the owner's name, street number, or other designation of the property and the mailing address of the owner, together with the necessary information for determining land value and classification and space for indicating the land value and value of the buildings on the land.

3.3.3 The card shall be so arranged as to show descriptive information of the buildings, pricing detail, depreciation allowed for physical, functional and economic factors and an outline sketch of all principal buildings in the parcel. The property record cards shall be provided in map, lot and sublot sequence.

3.3.4 Any coding used by the Company on the property record card will be clearly explained elsewhere on the card or in the appraisal manual.

3.3.5 The initial's of the Company's employee who measured and/or listed the property shall be noted on each property record card.

3.4 Sales Survey.

3.4.1 A DRA Certified Property Assessor Assistant under the guidance of a DRA Certified Property Assessor or Supervisor may validate sales data. A DRA Certified Property Assessor Supervisor shall prepare the company's sales survey.

3.4.2 In order to ensure that appraisals will reflect full and true value, the Municipality shall provide to the Company a copy of all property transfers for a period not to exceed two (2) years immediately preceding the effective date of the update.

3.4.3 A sales analysis shall be conducted using accepted appraisal methods in order to determine land, building and total property values. Such accepted methodology shall include the consideration of all sales given by the municipality to the Company and their inclusion in the sales survey book with appropriate notations for those sales not used in the correlation of values.

3.4.4 All qualified property sales shall be included in the manual by photocopy or printout of the property assessment record card and a photograph of the principal buildings shall be attached thereto. A list of all unqualified sales will also be provided.

3.4.5 The sales price and terms of the sale shall be verified by the Company and a notation as to qualified or unqualified transaction with unqualified sales noted as to reason made on the property assessment record card along with the sale price, date of the sale, and date of inspection.

3.4.6 Land values shall be determined from land only sales whenever possible, however, in the absence of an adequate number of land sales, the appraiser may use the land residual technique to assist him in the determination of land values. The analysis shall show the sale price, adjustments made and final value as of the effective date of the update.

3.4.7 The indicated land values shall be shown as, but not limited to, front foot, square foot, front acre or rear acre units or other appropriate units of comparison.

3.4.8 The completed sales survey showing the sales used and the analysis to indicate property values, including front foot, square foot or front acre, rear acre unit values, or other appropriate units of comparison shall be delivered to the Selectmen/Assessors for approval and shall become the property of the Municipality at the completion of the update.

3.5 Informal Reviews.

3.5.1 The Company shall mail, first class, to all property owners a notice of the newly estimated value of the property. Such notice shall also contain instructions for online access for 30 days for their ease in review and comparing assessments. The notice shall also contain the date, time and location of the informal review process including instructions on obtaining an informal review, the time frame in which the reviews will be scheduled and instructions relating to the appeal of the informal review process.

3.5.2 The informal review process shall include a **3** day window for property owners to call and schedule an appointment which will occur at a later date. The informal review process may be monitored by the Selectmen/Assessor or his/her designee. The Company shall ensure that an informal review of the newly estimated property values is provided to all property owners who request such review during the timeframe allowed for setting up appointments.

3.5.3 The Company shall notify all property owners addressed during the informal reviews of the disposition of their review stating whether or not a change in value has resulted and the amount thereof.

3.6 Appeal; Procedure Notification.

If any property owner believes their assessment is unfair and wishes to appeal for abatement, they **SHALL FIRST APPEAL TO THE LOCAL ASSESSING OFFICIALS** in writing, by March 1, in accordance with RSA 76:16. Forms for this purpose may be obtained from the local Assessing Officials. The **MUNICIPALITY** has until July 1 following notice of tax to grant or deny the abatement. If the property owner is dissatisfied with the decision of the local assessing authority, or the taxpayer does not receive a decision, the taxpayer may exercise **ONE** of the following options:

OPTION NUMBER 1

The taxpayer may **APPEAL TO THE BOARD OF TAX AND LAND APPEALS, 107 PLEASANT STREET, CONCORD, NEW HAMPSHIRE** 03301, in writing, after receiving the **MUNICIPALITY'S** decision or after July 1 and no later than September 1 after the date of the notice of tax, with a payment of an application fee as set by the Board (RSA76:16a)

OPTION NUMBER 2

The taxpayer may **APPEAL BY PETITION TO THE SUPERIOR COURT IN THE COUNTY IN WHICH THE PROPERTY IS LOCATED** on or before September 1 following the date of notice of tax. (RSA 76:17)

NOTE: An appeal to the State Board of Tax and Land Appeals shall be deemed a waiver of any right to petition the Superior Court (RSA 71-B:11)

INTEREST AT 12% PER ANNUM WILL BE CHARGED ON ALL PROPERTY TAXES NOT PAID BY THE DUE DATE AS SPECIFIED ON THE TAX BILL AND THE FILING OF A REQUEST FOR REVIEW OF THE ASSESSMENT WILL NOT WAIVE THIS PENALTY. (RSA 76:13)

4. CONDUCT OF VALUATION OF RESIDENTIAL AND COMMERCIAL/INDUSTRIAL PROPERTY

4.1 Inspection

The exterior and interior of each house or commercial/industrial building and appurtenant buildings to both, shall be carefully measured and the interior inspected where allowed.

4.2 Entrance

The Company shall guarantee 100% interior inspection of all property in the Municipality except for vacancies, refusals, unsafe structure, inhabitants that appear dangerous or threatening and those properties where the Company is unable to make reasonable arrangements for interior inspection, via the mailing of listing request letters for appointments to be made.

When entrance to a building is refused or the occupants are not present, the Company shall make a note, together with the date, on the property record card. If the inspection of the property is unsuccessful, the Company shall send a letter to the property owner requesting the property owner arrange an appointment for an interior inspection.

4.2.1 In all cases of entry, the property owner or occupant must be at least 18 years of age.

4.3 Measurement

The Company shall show on the property record card a diagram of the principal building and it's dimensions, with the street side or waterfront toward the bottom of the diagram or otherwise noted.

4.4 Construction

The quality of construction and approximate age shall be noted and the specific details of the following features, as applicable, such as foundation, basement area, roofing, flooring, exterior cover, interior finish, fireplaces, heating and air conditioning systems, solar collectors, plumbing and plumbing fixtures, tiling, the number of bed and bathrooms, sprinkler systems, elevators and any other data which would influence value.

4.5 Commercial and industrial property, whether rented or not, may have its earnings or estimated earnings capitalized to be used as a check against physical value.

5. HOW THE COMPANY VALUES PROPERTY

5.1 Replacement cost shall be computed using the schedules described in section 3.2. These values shall then be depreciated according to age, condition, utility and desirability and the appropriate amount of physical, functional and economic depreciation shall be shown on each property record card, or shown as a composite adjustment based on condition, utility and desirability.

5.2 If the residential property contains 4 or more separate apartments or residential areas and if the rental charges are at market level, the earnings may be examined to establish a basis of rent capitalization to be used as a comparison to other property indications of value.

5.3 Before the final values are estimated, a DRA Certified Property Assessor Supervisor shall compare the preliminary values with the sales utilized in the sales survey to ensure all values reflect the market as of April 1 of the year of the revaluation.

5.4 When computations of the data obtained from the inspection have been completed a final review shall be made by a DRA Certified Property Assessor Supervisor parcel by parcel, block by block, to identify and correct any mechanical errors, unusual features or anything influencing the final value and to ensure all properties are valued at their highest and best use.

6. CONDUCT OF VALUATION OF PUBLIC UTILITY PROPERTY

6.1 Public Utility property shall be appraised by the Company using the Handi Whitman replacement cost manual and depreciated for age and economic factors by the Company as commercial property so far as applicable. "Manchester Water Works valuation included."

7. ABATEMENT & TAX APPEALS

The Company agrees to furnish the services of a qualified representative to support the values established for the revaluation tax year upon local abatements without cost. Appeals to the N.H. Board of Tax and Land Appeals or Superior Court, in all cases where the appeals have been entered within the time prescribed by law will be at the per diem rate of $85/hour. "Any legal fees incurred are the sole responsibility of the town." In the case of an appeal upon Public Utility property that has been appraised by the Company, the services of an expert may be required and the charge shall be **$1,500** per proposal per day plus expenses. The Company shall continue to be responsible for providing a qualified representative to support the established value even if the Selectmen/Assessors have reduced the value as part of the proceedings defined in RSA 76:16. However, if the Selectmen/Assessors increase any value established by the Company, they forfeit their right to Company representation.

8. SERVICES TO BE PERFORMED BY THE MUNICIPALITY/CITY

8.1 The Municipality shall notify the Company, in writing, what property is exempt from taxation or for any reason dangerous or unsafe, so special arrangements can be made.

8.2 Office Space and Equipment.
The Municipality shall provide suitable office space with desks, tables, telephone access and chairs for the use of the agents and employees of the Company in performing their necessary work. The Company shall furnish any needed typewriters, adding machines, calculators and other such equipment. The municipality shall provide a **private phone line** for the scheduling of interior inspections, as well as the informal review appointments.

8.3 Records and Maps.
The Municipality shall furnish to the Company information pertaining to ownership of all property in the Municipality, including two sets of up-to-date tax maps, zoning maps, charts, plans and sales information which may be requested by the Company in performing its work under this contract. Maps must show lot size and road frontages. If lot size and road frontage is not on the maps, it must be provided by the town with the maps.

8.4 Sales Information.
The Municipality shall keep the Company informed of all sales of property taking place during the progress of the update of which it has knowledge, shall make corrections on municipal maps as of April 1 of the update year where lots have been subdivided, merged or apportioned , and notify the company of all ownership, name and address changes.

9. INDEMNIFICATION AND INSURANCE

9.1 The Company agrees to indemnify the Municipality against claims for bodily injury, death and property damage which arises through the company's actions in the course of the Company's performance of the agreement.

9.2 The Company shall not be responsible for consequential or compensatory damages arising from the late performance or non-performance of the agreement caused by circumstances which are beyond the Company's reasonable control.

9.3 The Company shall maintain Public Liability Insurance, Automobile Liability Insurance and Workmen's Compensation Insurance.

9.3.1 The Public Liability Insurance shall be in the form of commercial general liability with the inclusion of contractual liability coverage and shall provide limits of $1,000,000 each occurrence for bodily injury liability, and $1,000,000 each occurrence for property damage liability.

9.3.2 The Automobile Liability Insurance shall be in the form of comprehensive automobile liability and shall provide limits of $1,000,000 each occurrence for bodily injury liability. A copy of the insurance certificate shall be forwarded to the Department of Revenue Administration before starting any work.

9.4 The Company shall maintain certificates of insurance on record with the Department of Revenue before staring the revaluation confirming the required insurance coverage and providing that the State shall receive ten (10) days written notice of the cancellation or material change in the required insurance coverage.

10. PERFORMANCE BOND

The Company, before starting any update work shall deliver to the Municipality an executed bond or irrevocable letter of credit in the principal sum of the amount to be paid by the Municipality to the Company, if required, as provided in sub-paragraph 2.6, as security for the faithful and satisfactory performance of this contract and shall not expire before final values are submitted to and accepted by the assessing officials. A copy of the bond or irrevocable letter of credit shall be forwarded to the Department of Revenue Administration before starting any work.

11. PROJECT SIZE

It is agreed between the parties that the entire project consists of an estimate of **2,452** tracts as defined by RSA 75:9, and that in the event that the number should exceed 100% of said estimate, the company shall be entitled to additional remuneration based on **$35** per parcel/tract.

12. **ADDENDUMS AND APPENDIXES**
No measure and list, except sales properties.
Full field review not included.

OCT 2 3 2012

Agreement Execution

***Bond Required by Town Please Check One & Initial:** *Yes* ☒ *No* ☐
Additional Cost of $525
New Total, If Bond Required $18,025

In the presence of:

Witness

Municipality of: Auburn, N.H.

By: Russell Sullo

James Fitzpatrick

Paul Rauch

Board of Selectmen

Date: _____

In the presence of:

Sherry J. Chaun

Witness

Company: Avitar Associates of N.E., Inc.

By: Loren Martin

Loren J. Martin, President of Assessing Operations or Gary J. Roberge, CEO

Date: 10-24-12

AVITAR PERSONNEL

ID	EMPLOYEE	AVITAR POSITION	NH DRA CERTIFICATION
GR	Gary J Roberge	CEO, Sr Assessor	Certified Property Assessor Supervisor
LM	Loren J Martin	President, Sr Assessor	Certified Property Assessor Supervisor
DW	David Woodward	Assessor/Supervisor	Certified Property Assessor Supervisor
CJ	Connie Jackson	Assessor/Supervisor	Certified Property Assessor Supervisor
MS	Mark Stetson	Assessor/Supervisor	Certified Property Assessor Supervisor
CR	Chad Roberge	Assessor Assistant	Certified Property Assessor Assistant
KC	Kerry Connor	Assessor Assistant	Certified Property Assessor Assistant
DM	Dan Martin	Assessor Assistant	Certified Property Assessor Assistant
ER	Evan Roberge	Building Data Collector	Certified Building Measurer & Lister
JB	Jonathan Babon	Building Data Collector	Certified Building Measurer & Lister

SECTION 1

C. PERSONNEL & QUALIFICATIONS

PERSONNEL WHO CONTRIBUTED TO THIS PROJECT

ID	EMPLOYEE	AVITAR POSITION	NH DRA CERTIFICATION
GR	Gary J Roberge	CEO, Sr Assessor	Certified Property Assessor Supervisor
LM	Loren J Martin	President, Sr Assessor	Certified Property Assessor Supervisor
MS	Mark Stetson	Assessor/Supervisor	Certified Property Assessor Supervisor
CR	Chad Roberge	Assessor Assistant	Certified Property Assessor Assistant
KC	Kerry Connor	Assessor Assistant	Certified Property Assessor Assistant
JB	Jonathan Babon	Assessor Assistant	Certified Property Assessor Assistant
DM	Dan Martin	Assessor Assistant	Certified Property Assessor Assistant
ER	Evan Roberge	Assessor Assistant	Certified Property Assessor Assistant

DRA certification can be verified online at the State of NH DRA website at www.nh.gov/revenue as the Department of Revenue approve and certify all assessing personnel in the state.

SECTION 1

D. DATA COLLECTION

I. Introduction to Data Collection (No data collection was part of this update)

The task of the Measurer and Lister or Data Collector, as we refer to them, is to collect data pertaining to:

Square footage
Exterior and interior characteristics
Overall quality and condition of all building and land

Data Collectors are extremely important and are an integral part of the revaluation process. The data collected by the Measurer and Lister is used to establish the fair market value of properties for ad valorem taxation. Therefore, it is critical that such data be collected accurately and consistently to the best of their ability. The degree of accuracy obtained will directly reflect the overall quality of the individual appraisal, as well as the entire town wide revaluation.

In many instances, it is only the Data Collector whom the homeowner meets. Their ability to be courteous and professional lends credibility to the entire job. Conversely, a nonprofessional and discourteous attitude will create a very negative atmosphere throughout the town and promote distrust, as such, it is not tolerated.

Our staff is well trained, most with numerous years of experience. They are trained to measure and list all physical information, as well as note abnormalities in building or land condition for the Appraisal Supervisor's use on final review. Not all items noted or measured will directly impact value, but are noted for consistency and accuracy. A picture of the building, waterfront or view may be taken at this time, as well, to be attached to the assessment record card.

All personnel carry Company ID badges and their vehicles are marked with signs "Municipal Assessor". The Town Hall staff and/or the Police Department are notified of all staff working in the town, as well as maintain the identity of and vehicle registration for each employee.

DATA COLLECTION FORM SAMPLE, (DCF)

DATA COLLECTION FIELD DOCUMENT

GENERAL INFORMATION

MAP: | LOT: | SUBLOT:

OWNER

PROP LOCATION NO | STREET:

LISTING HISTORY

TE/INITIALS/REASON/ACTIO	ATE/INITIALS/REASON/ACTIO	TE/INITIALS/REASON/ACTI	ATE/INITIALS/REASON/ACTIO

SALES DATA

DATE	BK	PG	GRANTOR	Q/L	CODE	SALE PRICE

NOTES

COLOR: | UNITS:

EXTRA FEATURES

EXTRA FEATURES	LENGTH	WIDTH	UNITS	COND	NOTES/ID

LAND INFORMATION

ZONE | LAND USE | NEIGHBORHOOD | TOTAL SIZE

LAND USE	ZONE	SIZE	UNITS	NC	COND	CUCND	REC	NOTES
TOTAL ACRES								

MODEL/STYLE

ROOF STYLE

FLAT
GABLE OR HIP
GAMBREL
IRREGULAR
MANSARD
SALT BOX
SHED
WOOD TRUSS

ROOF COVER

ASBESTOS PANEL
ASBESTOS SHNGL
ASPHALT
CLAY/TILE
CORR COMP
HIGH QUALITY COMP
METAL/TIN
PREFAB METALS
ROLLED COMP
RUBBER MEMBR
SLATE
STANDING SEAM
TAR/GRAVEL
WD SHINGLE/SHAKE

EXTERIOR WALLS

ABOVE AVG
ALUM SIDING
ASBT SHINGLE
ASPHALT
AVERAGE
BELOW AVG/MASONIT
BRD & BATTEN
BR ON MASONRY
BRICK VENEER
CB STUCCO
CEDAR/REDWOOD
CEMENT CLAPBRDS
CLAP BOARD
CNCRT OR BLK
DECORATIVE BLK
GLASS/THERMO
LOGS
MINIMUM

EXT WALLS CONT.

NOVELTY
PRE FIN METAL
PREFAB PANEL T-111
STN ON MASONRY
VINYL SIDING
WOOD SHINGLE/SHAKE

INTERIOR WALLS

AVERAGE FOR USE
DRYWALL
MINIMUM
PLASTERED
PLYWOOD PANEL
WALLBOARD
WOOD/LOG

FLOORING

CARPET
CONCRETE
HARDTILE
HARDWOOD
LINOLEUM/VINYL
MIN PLYWOOD
PARQUET
PERGO/LAMINATE
PINE/SOFT WD

HEATING FUEL

ELECTRIC
GAS
OIL
SOLAR
WOOD/COAL

HEATING TYPE

CONVECTION
FA DUCTED
FA NO DUCTS
HOT WATER
NONE
RAD ELECT
RAD WATER
STEAM

BEDROOMS

BATHROOMS

FIXTURE COUNT

CML WALL FRAME

MASONRY
REIN-CONCRETE
SPECIAL
STEEL
WOOD

A/C

YES / NO

QUALITY

B3-MINIMUM
B2-AVG-20
B1-AVG-10
A0-AVG
A1-AVG+10
A2-AVG+20
A3-AVG+30
A4-EXC
A5-EXC+10
A6-EXC+20
A7-EXC+40
A8-EXC+60
A9-LUXURIOUS
AA-SPECIAL USE

STORY HEIGHT

1.00 1.50 1.75 2.00
2.50 2.75 3.00 3.50
3.75 4.00

YEAR BUILT

AGE CONDITION

VP P F A G VG E

BLDG DEPREC

PHYSICAL
FUNCTIONAL
ECONOMIC
TEMPORARY

II. Data Collection Form = DCF

The DCF document is a form onto which all information about the parcel is written. Each designated lot on a tax map should have a corresponding DCF. If a DCF is lacking for a lot, one is created.

Map - Lot - Sublot: Owner - Location - City - State

This information is important and serves to identify the lot, location and corresponding owner. This information is supplied by the town, generally in the form of computerized labels which are transferred to the DCF. When in the field, it is very important to determine if the information written on the label is accurate. If there are any discrepancies, it is noted on the DCF. Mapping and ownership problems must be identified and it is the town's responsibility to resolve these discrepancies. If information is missing, accurate information is obtained so that the label is complete.

In addition to map and owner information, a special code or account number may occasionally be found on the label and is used by the town. Original DCF's should not be destroyed. If a new one is needed, it is stapled behind the original. This will eliminate the possibility of errors being made when copying the label information onto the new DCF.

Date - Book - Page - Grantor - Q/U - Code - Sale Price

This section is used to describe recent sale information when available. When it exists, it is verified and noted on the DCF with a code of "VBO" meaning Verified by Owner. If no sales exist, we question the homeowner as to how long they have owned the property, if less than three years, sales information is obtained from the owner.

During our introduction to the property owner, we include the following or something similar:

> Approximately when was the home built and how long have you owned it?
>
> If they are new owners (within the past three years), we request and write down the date of the purchase, from whom the home was purchased, and whether or not other items were included in the sale such as boats, furniture, beach rights, if near water, etc. and if changes were made to the property after the sale and noted appropriately.

ARMS LENGTH SALE = Willing seller and willing buyer, both of whom are knowledgeable concerning all the uses of the property and having no previous relation and neither are under any undo duress.

It is indicated on the DCF if any information relative to the sale or other circumstances causing the selling price to be abnormally high or low is known.

It should be noted that some property owners may be reluctant to offer information regarding their purchase, as such; it is not always noted on the DCF.

History

This section is for the date, the assessor's initials, the reason they were there and the action taken. Listed below are codes of various actions. Characters one & two are the initials of assessor/lister, three is why they were there and four is the action taken.

ie: "04/04/2007 JDRL" indicates that Jane Doe visited the property on April 4, 2007 for the revaluation and measured and listed the property.

Third Character/Why	Fourth Character/Action
A = Abatement/Appeal	E = Estimate
C = Callback	L = Measure & Listed or just listed after a previous measure/or used on vacant property to prevent a future unnecessary list letter.
H = Hearing	
P = New Construction/Pickup	M = Measure Only
R = Revaluation	R = Reviewed
S = Subdivision	X = Refusal with notes
T = Town/Taxpayer Request	
U = Update	*Used with 3rd Character H only*
V = Verification Process	C = Change used w/Hearing Only
	N = No Change used w/Hearing Only

INSP - System Applies to Properties Selected for Data Verification in either the Random Select Process or Block Formation Process.

ACTIONS

E = ESTIMATED - Interior characteristics are estimated when entry is not possible, either now or in the future. Some common reasons for estimating interiors are:

Attempted to obtain a list at two different times and no one has been present.

Homeowner has refused to allow interior inspection or to give the information about the interior that was requested or information given was questionable.

Abandoned buildings.

L = LISTED - A person (not necessarily a homeowner) was asked questions about the property, and a walk through of the entire dwelling was made. If the owner refuses to help, by not allowing an interior tour or requesting us to leave the property, all such information is clearly noted on the DCF.

M = MEASURED only.

R = REVIEWED - Generally there for an abatement, appeal, or comparable research and review of property information, refers to exterior review only.

X = REFUSED - Homeowner or person talked to at the property has refused to:

Allow the building to be measured.
Allow a walk-through of the home.
Or, requested to leave the property.

LISTING THE PROPERTY

Building Site & Land Topography Description

Undeveloped/Wooded — A tract of land that is not improved with water, septic (or sewer) or electric.

Undeveloped/Cleared — Same as undeveloped wooded, but an area that could be a house site is cleared of trees or is a field.

Natural — Often found on seasonal/camp style properties and at times on some year round homes. Typically, have little to no landscape features.

Fair — Normally consists of lawn area only. May contain some minor ornamental features such as trees or shrubbery or gardens, but typically of a very nominal amount.

Average — Typical landscaping features consisting of lawn area and typical ornamental features such as trees or shrubbery or minor garden/flower beds. Can contain any/or all above features.

Good — Typically consists of nice lawn area, desirable ornamental features such as trees, shrubbery or garden/flower beds or minor amounts of stonewalls or walkways.

V. Good — Typically nice landscaped lawn and ornamental shrubbery professionally designed or a non-professional well designed layout, with some or all of the above.

Excellent — More expansive or manicured lawn areas and ornamental shrubs and trees or contain stonewalls or stone walkways or pond areas in a generally well laid out professional looking design.

Best — Extensive manicured lawn areas which include a combination of extensive trees/shrubs, well laid out gardens/flower beds and stonewalls and/or stone walls and/or pond areas in a well designed professional looking landscape.

<u>Topography</u>

Level — Flat, no hills, little to no ups or downs.

Mild — Mostly level topography with minor slopes and/or very gentle rolling topography.

Rolling — Typically rolling terrain with ups and downs or terraced areas or minor grade changes.

Moderate — Can have level areas, but predominately sloping topography which can be typically overcome by development, but costs are typically higher. Slopes can be readily walked and most people typically could control themselves if they fell on the slope.

Steep — Typically highly sloping terrain, but not as severe as severe slope. Development costs are typically higher, but developable with added costs. Generally difficult to walk, but can be safely walked with care.

Severe — Typically extreme sloping topography that would normally be viewed as unbuildable due to extremely high site costs for well, septic, driveways and home site creation. Typical person would not be able to walk or climb easily.

Driveway — Gravel/Dirt; Paved; Undeveloped.

Road — Gravel/Dirt; Paved; Undeveloped.

LISTING THE PROPERTY

Building Style & Normal Story Height

BUILDING STYLES*	PREDOMINATE STORY HEIGHT
Ranch	One Story
Mobile Home	One Story
Cape	1-1/2, 1-3/4 Story
Saltbox	1-3/4 Story
Gambrel	1-3/4, 2 Story
Colonial	2 Story
Raised Ranch	One Story w/Raised Basement
Tri-Level	Split-Level
A-Frame	One, 1-1/2
Camp	One Story
Conventional	1-3/4 - 2-3/4

*Building styles are for descriptive purposes only and do not affect the value.

Story Height Explanation (See Story Height Examples)

The story heights are based on the amount of floor space which has headroom for the average person, we use six (6) feet for this calculation. What this means is if the upper floor of a particular house has only 100 usable square feet as defined above, and the first floor area is 400 square feet, then the house will be classified as one (1) story with a finished or unfinished attic.

The critical thing to notice when listing the house is the amount of headroom available in the upper stories and the approximate floor space covered. Use of this method to classify story height will facilitate consistent story height classification. The story height of the main section of the building is used to establish the story height description of the structure.

One Story (Typically - Ranch or Camp style buildings): The living area in this type of residence is confined to the ground floor. The headroom in the attic is usually too low for use as a living area and is used for storage only; however attics are possible, providing about 25% of the first floor space.

One & Half Story (Typically - Cape & Conventional style buildings): The living area in the upper level of this type of residence is around 50% of the ground floor. This is made possible by a combination of high peaked roof, extended wall heights and/or dormers. Only the upper level area with a ceiling height of 6 feet or more is considered living area. Measurements are taken by holding the tape at the 6 foot height mark and then measuring across the building. The living area of this residence is the ground floor area times 1.50.

One & Three Quarter Stories (Typically - Cape, Conventional & Gambrel style buildings): The living area in the upper level of this type of residence is made from 65% to 90% of the ground floor. This is made possible by a combination of high peaked roof, extended wall heights and/or dormers. Only the upper level area with a ceiling height of 6 feet or more is considered living area. The living area of this residence is the ground floor times 1.75. See description on 1-1/2 stories for details on how to measure.

Two Stories (Typically - Colonial, Conventional & Gambrel style buildings): The living area in the upper level of this type of residence is 90% to 100% of the ground floor. The living area is the ground floor times 2.0.

Split Levels (Typically - Raised Ranches or Tri-Level style buildings): This type of residence has two (2) or (3) living area levels. One area is about four (4) feet below grade and the second is about (4) feet above grade and the third is above or right on top of one of these. The lower level in this type of residence was originally designed and built to serve as a living area and not a basement. Both levels have full ceiling heights. Another variation is an added third living area at or above ground level.

Coding: A three (3) character acronym coding system is used to classify areas and story heights of buildings. The following is the coding system and descriptions which must be used in identifying areas of the sketch:

***ATF** ATTIC FINISHED - Access is through permanent stairs, normally no more than 25% of the total floor area and has 6 foot ceiling height.
ATU ATTIC UNFINISHED - No interior finish. (Same as above)
***BMF** BASEMENT FINISHED - Below grade and meets at least three of these four criteria: finished floors, finished walls, finished ceilings and heat.
BMG BASEMENT GARAGE - Generally sectioned off from the rest of the basement.
BMU BASEMENT UNFINISHED - Known as cellar and is below grade.
COF COMMERCIAL OFFICE - Refers to office area in commercial buildings not built for offices, such as factories and warehouses.
CRL CRAWL - Basement having 5' or less headroom.
CPT CARPORT - A roofed structure generally with 1 or 2 walls and attached to the main structure.
CTH Cathedral ceiling area, this is where the ceiling height is greater than 12 feet.
DEK DECK - An open deck or entrance landing with no roof.
ENT ENTRANCE - Entrance Landing with no roof, 2x3 and larger, normally unable to place a chair and sit.
EPF ENCLOSED PORCH - Typically unheated & uninsulated area. May have small heater, but is of seasonal use. Finished walls, floors and ceilings.
EPU COVERED BASEMENT ENTRY - All four sides are tight to weather, entrance to BMU, other than metal door (bulkheads).
***FFF** FIRST FLOOR FINISH - Living space with full ceiling height and finished interior.
FFU FIRST FLOOR UNFINISHED - Similar to FFF, but unfinished interior.
GAR GARAGE - A structure large enough to hold and store automobiles at grade level.
***HSF** HALF STORY FINISHED - Usually an upper level story with approximately 40% to 60% of floor area available and used for living. (6 foot ceiling height).
HSU HALF STORY UNFINISHED - Same as HSF, but interior is unfinished.
LDK Loading Dock area. Raised platform of cement.
OFF OFFICE AREA - Finished area within home used primarily for business.
OPF OPEN PORCH - Roof structure with floor, but at least one (1) side is exposed to the weather. Screened porches are considered OPF's.
PAT Patio area of stone, cement, brick, etc.
PRS Piling driven into the ground or other material used to support a building off the ground. Normally found with camps or seasonal construction.
***RBF** RAISED BASEMENT FINISHED - Used on raised ranch (split level) and Tri-Level homes or any building where 3 of the 4 walls or all 4 walls are 3' to 4' above ground, creating greater utility than a normal basement, or 1.5 or more walls with large windows providing good natural lighting in the basement, and walkout access.
RBU RAISED BASEMENT UNFINISHED - Same as RBF, but unfinished.
STO STORAGE - Unfinished area used for storage. Not easily converted to living space.
SFA SEMI-FINISHED-AREA - Enclosed areas finished similar to living space, but not living space, such as indoor pool enclosures.
SLB SLAB - Foundation description where no basement or crawl space exist. Poured cement slab.
***TQF** 3/4 STORY FINISHED - A finished area with approximately 75% of floor area usable as living space.
TQU 3/4 STORY UNFINISHED - Same as TQF, except unfinished.

***UFF** UPPER FLOOR FINISHED - Upper floor living space with full ceiling height and finished interior.

UFU UPPER FLOOR UNFINISHED - Same as UFF, except there is no finished interior.

VLT VAULTED CEILING - Ceilings which are slanted or extended above the normal 8 feet, but less than 12 feet.

***Finished area is denoted by 3 or 4 finishes in a space – heat, floors, walls and ceilings.**

Notes:

1.) Attics - Attics are only classified if they are accessed by a permanent stairway. Attics which are accessed by pull down stairs or ladder are not assessed, but should be noted in the notes.

2.) Basements - Below grade areas with at least 5' or more headroom are considered basements. Areas with less than 5' of headroom are considered crawl space. A note should be made when access to the basement is from the outside of the home only. Usable basement areas should be measured, drawn and coded on the sketch. If basement areas are estimated, a note should be made of this estimate in the remark section.

3.) Office Areas - Office areas should be measured and drawn on the sketch for all commercial buildings, not designed specifically for offices, ie. garages, warehouses, factories, etc.

4.) Cathedral Ceilings - Cathedral ceiling areas must be measured when entry into the home is obtained. The area of the cathedral ceiling (length and width) must be drawn and depicted in the sketch area.

5.) Vaulted Ceilings - Are areas where the ceiling is pitched upward, not flat by about 2 to 5 feet, but less than one-story which is the typical height of a cathedral ceiling.

Bay or Bow Window

A bay or bow window is a projection on the side(s) of a house which may or may not be considered a livable area. If the bay window(s) include useable floor space, it must be measured, drawn on the sketch at its actual location and properly labeled. Bay windows are most often angled and are drawn to scale on the sketch as they exist, plus a few extra measures as described below to allow for accurate area calculations.

Only needed if different from other side

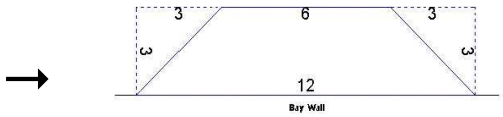

How to measure and sketch a bay window:

1.) Classify the bay window according its appropriate story height.
2.) Check for basement area under the bay window upon listing.
3.) Bay windows are only picked up when they include floor space.

In the case of a **Bow window**, the same floor area requirements exist as with the bay window. However, measuring is a bit different. We need to know the depth of the window (5') and the length (24') to be able to sketch and calculate the area. In this case, the length from the point where the bow begins to where it ends is 24 feet. The altitude of the arc created by the bow, or the depth of the window, is 5 feet.

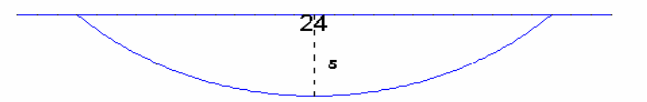

Angles

Angles are a common type of measure that we come across in the field and it is crucial when measuring an angle to have enough written measurements on the sketch. The square footage on an angle cannot be computed if the appropriate measurements are not placed on the drawing. Create a right triangle on the ground where the hypotenuse is the building wall that is at an angle from the main structure, and then draw that triangle in your sketch giving all the measurements.

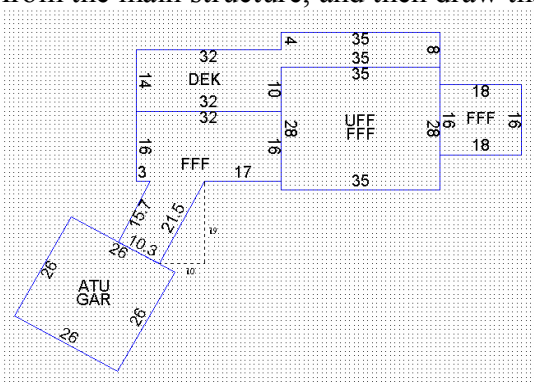

The two dashed lines form a 90° angle or right triangle with the building wall being the hypotenuse. Record all the dimensions accurately. With this information, the ATU/GAR addition and the FFF area can be drawn and calculated accurately.

Structural Elements

Structural elements describe exterior and interior characteristics of the house. The following is a description list of each structural element.

EXTERIOR WALLS

Two (2) entries possible, the 2 most predominate

MINIMUM: Plywood. Subwall sheathing with tar paper cover as a permanent siding.

BELOW AVERAGE: Siding not otherwise described and reflecting less than average quality. ie: masonite, rough sawn lumber w/bark.

NOVELTY: Denotes wood siding, generally found on camps, with or without sheathing underneath.

AVERAGE: Siding not otherwise described and reflecting average quality (for comparison purposes other average quality sidings include novelty, board & batten & clapboard). All forms of softwood.

BOARD & BATTEN: Vertical boards with narrow wooden strips called battens covering the joists.

ASBESTOS SHINGLE: Typically the shingles are hard and brittle with noticeable grain or textured surface, non-flammable material that comes in 1x2 sections used in homes 1940 - 1960's.

LOGS: Logs not simulated log.

ABOVE AVERAGE: Siding not otherwise described and reflecting better than average quality.

CLAPBOARD: Wood siding having one edge thicker than the other and laid so that the thick edge overlaps the thin edge of the previous board, not cedar or redwood, usually has knots.

CEDAR OR REDWOOD: Most commonly found as vertical siding, or at various angles on contemporary style housing, also exist as very high grade clapboard or shingles can have knots on low side of cedar/redwood.

PREFAB WOOD PANEL: A type of plywood siding of which there are unlimited varieties on the market. (T-111) typically 4x8 sheets.

DECORATIVE BLOCK: Cement block that is either fluted or has a rough finish which appears like it has been broken in half.

WOOD SHINGLE: Shingles not of cedar or redwood, good quality shingles, but not above average.

CONCRETE/CINDER: Concrete or cinderblock siding.

STUCCO: Stucco veneer on concrete, cinder block or wood.

ASPHALT: Asphalt composition shingle, usually on modest housing.

BRICK ON VENEER: Brick veneer on wood or metal frame construction with wood sheathing.

BRICK ON MASONRY: A load bearing structural wall. Not brick buildings.

STONE ON MASONRY: Refers to various stone or stone veneers usually on a load bearing masonry wall.

VINYL SIDING: Clapboards made of vinyl. Various grades or qualities. Typical siding used in today's construction due to low cost when compared to cedar clapboard.

ALUMINUM SIDING: Same as vinyl, but with aluminum material, clapboard style siding made from aluminum.

PRE-FINISHED METAL: Enameled or anodized metal commonly found on campers/mobile homes, commercial and industrial buildings.

GLASS/THERMOPANE: Vacuum packed glass sandwich, usually tinted and commonly found on large commercial and office buildings.

SOLID BRICK/STONE: Solid masonry walls; precast concrete panels.

CEMENT CLAPBOARD: Cement fiber siding. Asbestos-free fiber and cement combined and pressed together in the shape of a clapboard. Holds paint very well.

MASONITE: Composite pressboard/fiberboard, if not maintained will show areas of rot.

ROOF STRUCTURES

FLAT ROOF: Flat, no pitch to any direction.

SHED ROOF: Single direction sloping.

GABLE: A ridged roof with two pitches slopping away from each other.

HIP: A roof that rises by inclined planes from all four sides of the house to one common ridge or point.

SALTBOX: Essentially the same as a gable roof, but one of the two slopes is much longer than the other.

MANSARD: Similar to hip roof, but having a flat area on the top or changes the pitch of incline part way.

GAMBREL: A roof with two distant slopes on each side forming four roof planes.

IRREGULAR: Otherwise not described and having many different angles, shapes and slopes, i.e. bow style roof.

ROOF COVER

METAL/TIN: Tin or metal covering, often times corrugated like ribbon candy, typically 4x8 sheets, light gauge.

ROLLED COMPOSITION: Typically a felt saturated with asphalt and granule stones on the surface. Comes in a roll. Good for low pitch roofs.

ASPHALT/FIBER: Standard type of shingle used today. Can be single or three tab. Including Architectural style shingles.

TAR/GRAVEL: A flat or very low pitched roof coated with tar material and then covered by a uniform crushed gravel material. Normally seen on commercial/industrial buildings.

RUBBER MEMBRANE: A thin sheet of rubber seamed together. Typically found on flat roofs. Typical for commercial/industrial buildings.

ASBESTOS: Shingles of rigid fireproof asbestos. Typically laid in a diamond pattern. Very brittle. Used in homes circa 1940-1960's.

CLAY/TILE: Terra Cotta roofs that are not typically found in New England.

WOOD SHINGLES: Wood shingle or shake. Wood shakes have random thicknesses as they are hand split.

SLATE SHINGLES: Rectangular pieces of slate, each overlapping the other.

CORRUGATED COMPOSITION: Typically in 4'x8' sheets. This includes Anjuline panels.

PREFAB METAL: Modified corrugated metal panels that are one piece which run from ridge to soffit. These are either nailed or screwed. Panels that are one piece and run from ridge to soffit.

HIGH QUALITY/COMPOSITION:
This is a newer roof that is typically found on higher priced homes. The material can be made with almost any material. Pressed or formed to look like slate or shake. Life expectancy is 50 years.

STANDING SEAM: Heavy gauge metal roofing that "stands up" at seams about 2", every 6-8 inches in an upside down cone fashion. 50 year life.

INTERIOR WALLS

Two (2) entries possible, choose the 2 most predominate

MASONRY/MINIMUM: Cinder block or concrete form/or studs, no finish.

WALL BOARD: Composition 4' x 8' sheets, such as Celotex.

PLASTER: All plaster backed by wood lattice attached to the studs.

****WOOD/LOG:** Tongue & groove construction, logs, wainscoting.

DRYWALL: A rigid sandwich of plaster and paper.

PLYWOOD PANEL: 4' x 8' plywood panel sheathing comes in many grades and styles.

AVERAGE FOR USE: Generally used for commercial/industrial buildings to describe the interior finish as being normal for that style building and use.

***Custom Wood is now being called Wood/Log. Custom Wood was meant and used to mean solid wood interior, and the term custom was improperly used. As such, it is being corrected, the term custom wood and wood/log are synonymous, interchangeable and carry the same value. The overall quality grade of the house accounts for various wood and design qualities.*

HEATING FUEL

WOOD/COAL: Choose only if there is no conventional heating system. Wood stoves only. (Such as in camps, cottages).

OIL: May be identified on the exterior by the presence of oil filler pipes, kerosene or K1 are also fuel oil's.

GAS: LP or propane gas - these can be identified by LP gas which has a meter on the side of the house and propane gas will have large tank on or in the ground.

ELECTRIC: Baseboards.

SOLAR: Solar panels can be viewed on the roof area.

HEATING TYPE

NONE: No heat.

CONVECTION: Heat transfer through dispersion. (Wood stove/monitor or Rennai type heat).

FORCED AIR NOT DUCTED:
Has blower to blow heat through one vent, no duct work in the house.

FORCED AIR DUCTED: Series of ducts throughout the house, for hot air to be blown through.

HOT WATER: Forced hot water through baseboards.

STEAM: Radiators.

RADIANT ELECTRIC: Electric baseboard, typical electric heat, oil heat supplied through floors, panels in the walls or ceilings.

RADIANT WATER: Hot water heat in the floors by tubing under flooring with hot water through them.

HEAT PUMP: Electric unit which provides forced air heat, usually combined with central air conditioning.

GEOTHERMAL HEAT: Should be listed as electric under heat fuel and heat pump under heat type.

INTERIOR FLOORING

Two (2) may be chosen, the two most predominant are listed.

MINIMUM PLYWOOD: Plywood subfloor or underlayment.

CONCRETE: Concrete slab usually commercial or industrial.

HARD TILES: Quarry or ceramic tiles.

LINOLEUM/VINYL: Refers to all forms of linoleum type products of various designs and shapes.

PINE OR SOFTWOODS: Pine or softwood boards covering floor area.

HARDWOOD: Generally oak, cherry or maple woods.

PERGO/LAMINATE: A laminate wood look floor. Very durable.

PARQUET FLOORING: Refers to a surface made of small pieces of hardwood, solids and veneers in various patterns and designs.

CARPET: Wall to wall carpet of good grade, usually found over the subfloor material, but occasionally covering other floor covers as a replacement.

AVERAGE FOR USE: Generally used for commercial/industrial buildings to describe the floor as being normal for this type of structure and use.

NUMBER OF BEDROOMS

Bedrooms should be counted considering the resale value, rather than the homeowner's personal use of the rooms. For example, if you go upstairs and find three (3) rooms and a bathroom and the owner says there are only two (2) bedrooms, the other room is used as a library, sewing room, office, etc., then for our purposes, that third room is a third bedroom. One must be careful because libraries, offices and sewing rooms can be legitimate depending on the location in the house and access. Presence of a closet space generally is reason to classify as a bedroom(s). However, it should be noted that a closet is not the only measure to determine, ie: many homes had no closets in the bedroom, yet they are still classified as bedrooms.

BATHS OR BEDROOMS

Count the physical number of rooms and total fixtures. For bathrooms, enter the number of rooms and under fixtures, enter the total number of fixtures. A fixture is a bath, sink, shower, urinal, bidet, Jacuzzi tub, etc.

Commercial Baths

0 = None
1 = Below average for use
2 = Average for use
3 = Above average for use
4 = Extensive for use

GENERATORS

Number of units found. Notes on size and model should be made. This option to assess as part of the building characteristic is available; however, it may or may not be implemented in this community.

EXTRA KITCHEN

Number of kitchens that exist beyond the first/main kitchen in the home. Normally seen in in-law apartments or additional living areas. This option to assess as part of the building characteristic is available; however, it may or may not be implemented in this community.

AIR CONDITION SYSTEMS

Room air conditioners are not considered, unless permanently built in.

NO: None exist, or only room units are present.

YES: Normally a large compressor found outside with complete duct work throughout house or parts of the house, sometimes combined with a heat pump.

If a permanent wall unit is found, it will be noted as central air and an estimated percentage of the cooled area will be noted, ie 25%, 50%, 75% or 100%.

NUMBER OF STORIES

The number of stories should be identified and noted on the DCF upon measuring. The number of stories will be further adjusted for accuracy, if needed, upon listing or review. If the building has multiple story heights, the area with the most square footage should determine the overall story height classification. However, each section of the house should be correctly labeled as it exists, on the sketch.

QUALITY ADJUSTMENT

Quality adjustment refers to the overall quality of construction, marketability and desirability of the property.

Defined as:	B3 = Minimum	A4 = Excellent
	B2 = Average - 20%	A5 = Excellent + 10%
	B1 = Average - 10%	A6 = Excellent + 20%
	A0 = Average	A7 = Excellent + 40%
	A1 = Average + 10%	A8 = Excellent + 60%
	A2 = Average + 20%	A9 = Luxurious
	A3 = Average + 30%	AA = Special Use

CONDITION

Condition relates to the primary structures condition relative to the year built listed as:

Excellent / Very Good / Good / Average / Fair / Poor or Very Poor

This is also where depreciation is accounted for. Depreciation is defined as a decrease or loss in value because of wear, age, location or other causes.

Defined as:

Functional - Based on problems with design, layout and/or use of building, i.e. bathroom between 2 adjacent bedrooms with no hallway access to bathroom. Bedroom through bedroom access, very low ceiling, chimney through middle of the room.

Economic - Based on factors influencing value that are external to the building and beyond the owner's control, i.e. house is situated close to a nightclub, airport, dump, sand & gravel pit or any unsightly property.

Physical - Poor physical condition above and beyond the normal wear and tear, i.e. severe water damage, fire damage, rotted window sills, bouncing, cupping or crowning floorboards, sagging ceiling or floor.

The percentage applied to depreciation is calculated based on the severity of the issues as noted by the data collector. The Supervisor makes this determination based on the notes of the data collector. The reason for the depreciation, i.e. next to gravel pit should be listed in the notes section with the appropriate adjustment in the depreciation section. Typically, physical depreciation relates to the cost to cure the problem.

XFOB

Extra features and outbuildings. In general, XFOB's refer to structures that are not attached to the principal building. XFOB's must be:

a. Identified.
b. Measured - (length & width).
c. Units or quantity (how many) identified (when length & width not used).
d. Condition - noted as a percentage.

IGP - IN GROUND POOL - There are many different sizes of IGP's and all will need to be measured accurately. Pools may be of irregular shapes such as kidney bean. A kidney bean shape IGP should be measured on its longest length and its average width.

AGP - ABOVE GROUND POOL - AGP's are measured and assessed starting at 18' diameter. AGP's less than 18' in diameter (or less than 250 square feet) are not assessed, but should be measured and noted on the card. Softpools are not measured, but should be noted.

Common AGP diameters and AREA calculators for round pools.

Diameter	Area (Units)	Length	Width
18'	254	18'	14'
20'	314	20'	15'
22'	380	22'	17'
24'	452	24'	18'
27'	572	27'	21'
28'	615	28'	22'

AGP's that are rectangular are measured on their longest length & widest width.

SHEDS - All sheds are measured. An average new shed should have a condition of 100%. If very good quality, increase or decrease if in poor condition.

DECK - Deck refers to platforms that are not attached to the primary building. Some decks will be attached to the above ground pools.

All XFOB's are measured with the exception of the following:

1. Childs playhouse
2. Tree houses
3. Ice or Bob houses
4. Bulkheads - metal doors covering the entrance to the basement
5. Dog houses
6. Fire escape platforms
7. Handicap ramps

STORY HEIGHT EXAMPLES

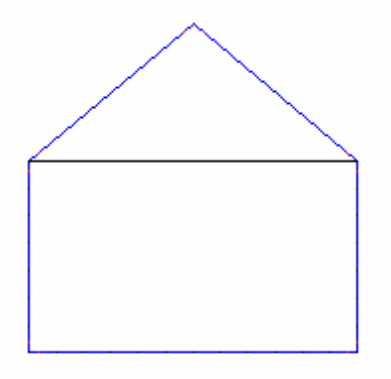

1 STORY FRAME
Ranch - Bungalow or comparable structures. No second floor or attic space.

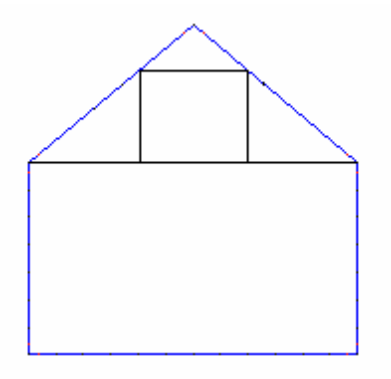

1 STORY FRAME & ATTIC
Mixture of Ranch & Cape Cod Style. Camps, Cottages & Mixtures. Low headroom. Only about 25% of the first floor space has 6' headroom on the upper floor. Could be noted as 1 story dwelling or a 1-1/2 story dwelling dependent upon market information.

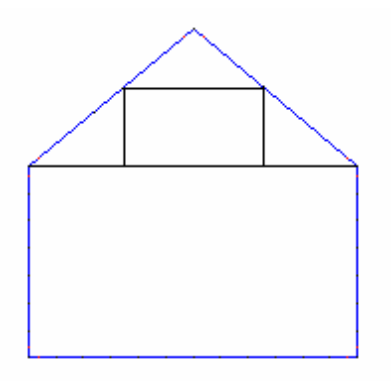

Example A

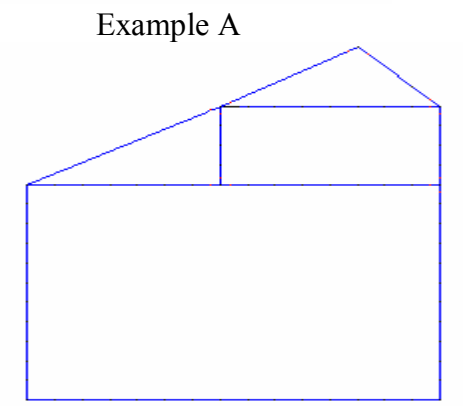

Example B

1-1/2 STORY FRAME
Same basic structure as above with or without shed dormers. In both cases only about 50% of the ground floor space exists in the upper floor as useable space with 6' wall height. Floor space may be larger, but ceiling slope brings the floor to ceiling height less than 6', and as a result, it is not considered upper floor area. See Example A & B Left

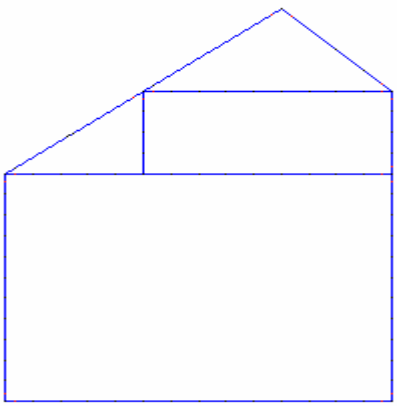

Example A

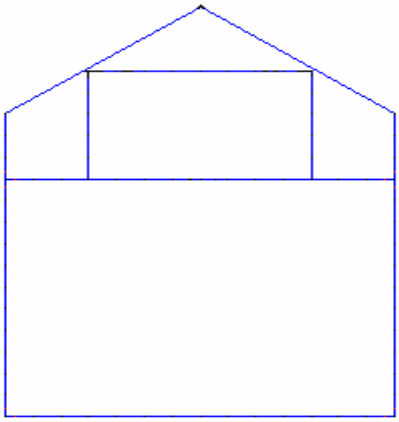

Example B

1-3/4 STORY FRAME
Full shed dormer or very high pitch roof without dormer found throughout the state. Second floor area is about 75% or more of the first floor area.
See Example A & B Left

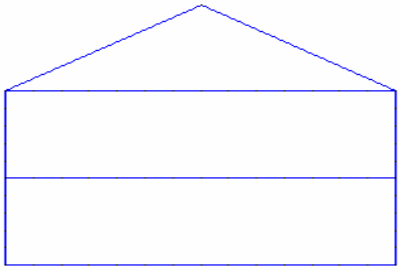

2 STORY FRAME
Side walls fully perpendicular. Slopes in ceiling do not interfere with total use. Full ground area carried to second floor, have 6' or greater ceiling height.

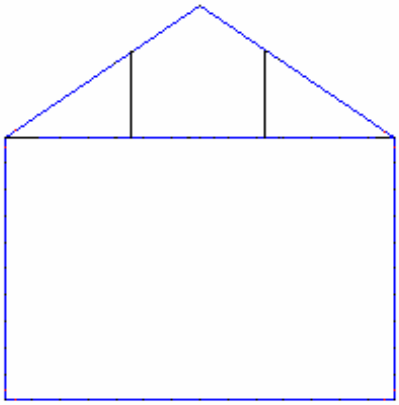

2 STORY FRAME & ATTIC
Has a higher pitch in roof. Stairs to third floor, providing only about 25% useable space in the 3rd floor attic area.

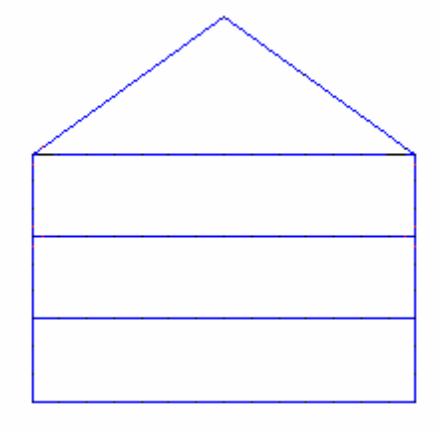

3 STORY FRAME
All floors perpendicular walls, equal useable living space on all three floors.

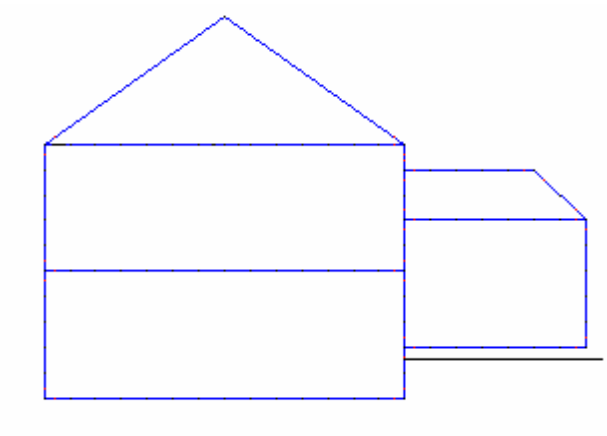

Tri-level = 2 story type structures with entrance midway between the two, with an addition at a different level, usually between the other two. One level 4' below grade, one on grade and one 4' above grade.

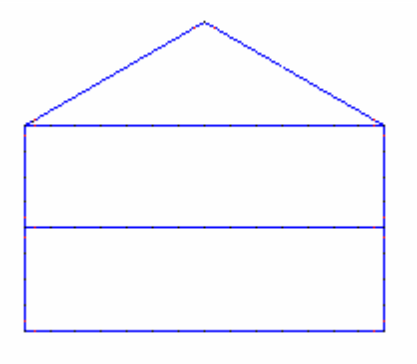

SPLIT ENTRY - one story Ranch Style Home ½ of lower floor foundation exposed.

There are two (2) methods to determine story height other than visually:

1.) This method is the most accurate way to determine story height. When entry into the home is obtained, the data collector will measure across the ceiling at approximately 6' in height (in the upper story(ies). This measurement will determine the upper story liveable area and from this, a story height may be obtained.

Example: Method 1

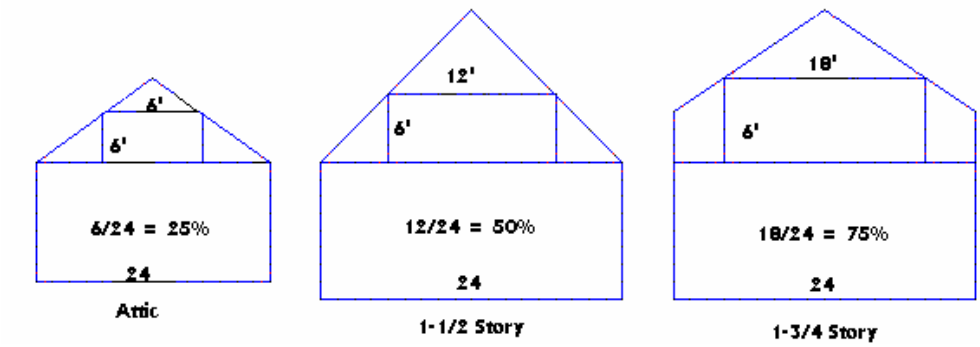

2.) This method may be utilized when entry into the home has not occurred. This method will give you a rough idea of the story height.

Run an imaginary line thru the upper part of window(s) to where it would meet the roof line. Run a second imaginary line down from this point. The distance from the side of the house to this second imaginary line is measured. Double this measurement to account for this distance on the other side. This represents non-livable area.

Example: Method 2

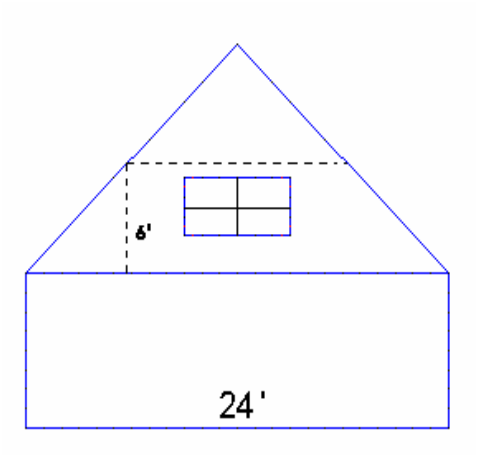

Computation:
6 x2 = 12 (12' total non livable space)
24-12=12 (12' total living space)
12/24 = 50% = Half Story

*Note: Estimate 6' ceiling height. Normally, this is just below or at window top. It is important to know where the first floor ends and the second floor begin, via window view, as high exterior side walls may not mean higher first floor ceiling and this may increase the potential second floor area.

Dormers

Dormers are projected roof lines that may or may not be considered as livable area. When dormers are of considerable size, they contribute to the livable area. The additional area supplied by the dormer must be included in the determination of story height.

EXAMPLES:

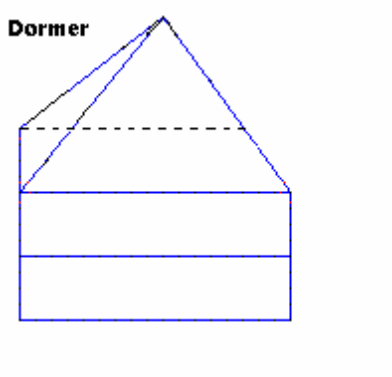

Normally this is 2-1/2 story house without a dormer. Due to the addition of a full or at least 3/4 length dormer, we now have a 2-3/4 story house. Full dormer means from one end to the other. 3/4 dormer means the dormer covers at least 3/4 of the total distance from end to end.

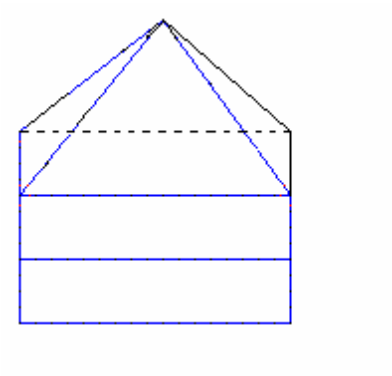

The addition of a dormer to each side of the house can transform a 2-1/2 story house to a 3 story house if full dormers or 2-3/4 story if partial dormers. It is important to note the size of the dormers, whether half, 3/4 or full.

In some cases, the dormer may be only half way down the side of the house. In this case, show the location of the dormer on the sketch with proper story height labeling.

Represents dormer addition

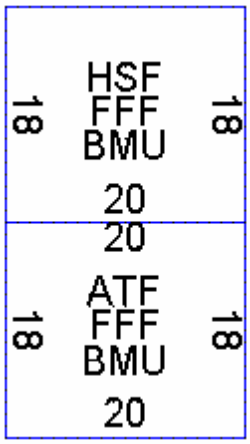

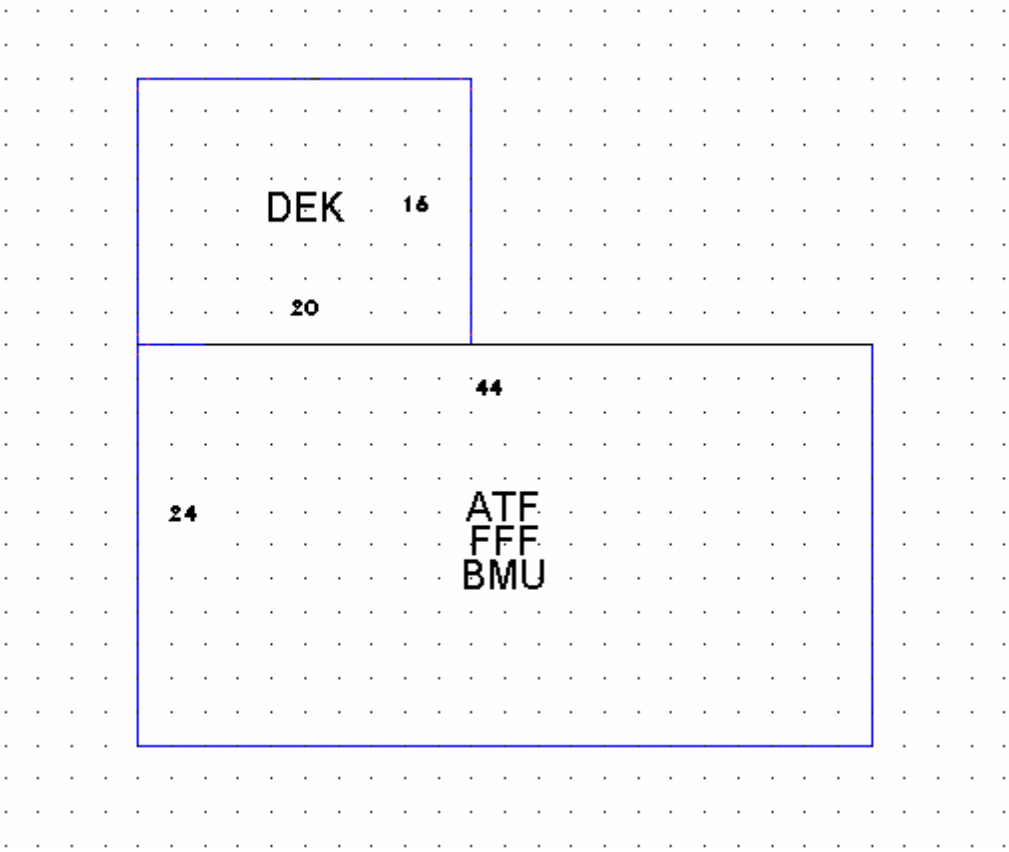

The grid on the back of the DCF is used to draw a sketch of the building to scale. Each point on the grid represents 2 feet, unless otherwise noted by the field person on the sketch.

Each section is labeled by existing floors starting with the attic, upper floors, first floor or ground floor and then the basement. Order of the labels does not affect the value, but it does look more correct when labeled top down.

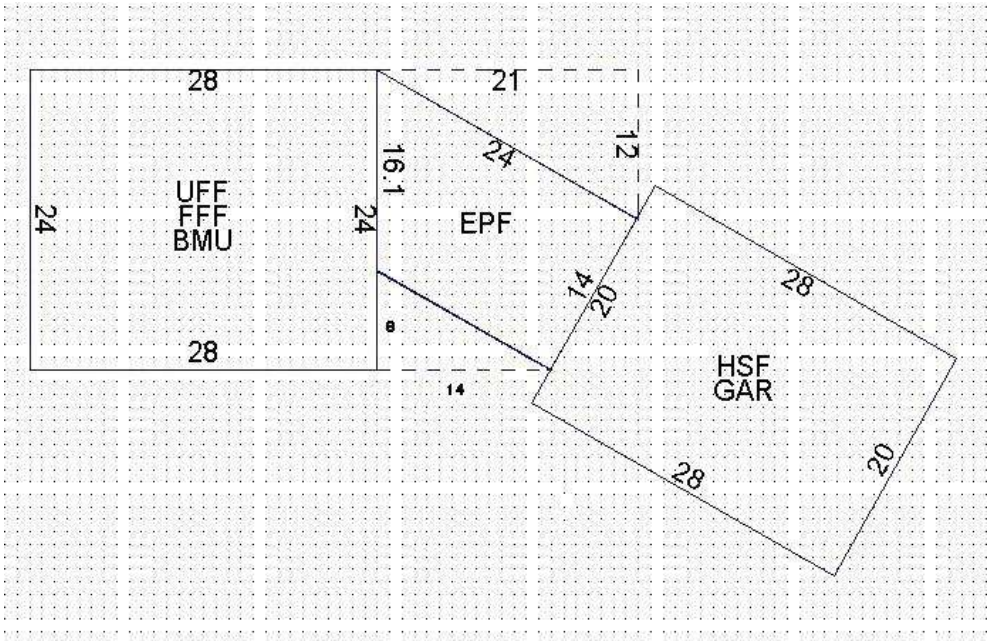

Whenever angles are involved, it is important to provide enough information to accurately compute the area of each section. By breaking up a section into squares, rectangles and right triangles, it makes the area calculation easier and more accurate. Too much information is better than too little. With too much information, we can simply ignore the excess and still calculate the area. With too little information, someone must revisit the property.

ROOF TYPES

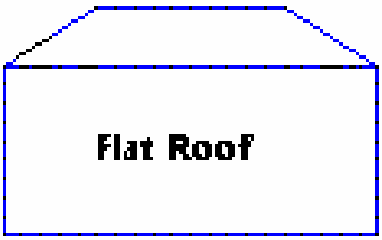
Flat Roof

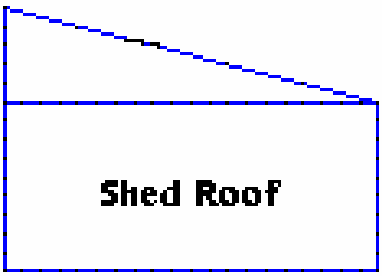
Shed Roof

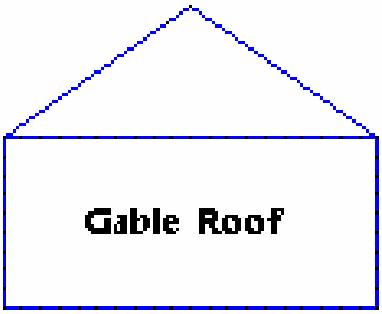
Gable Roof

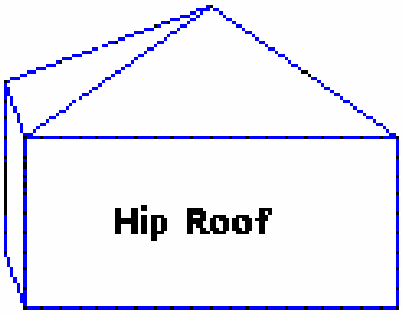
Hip Roof

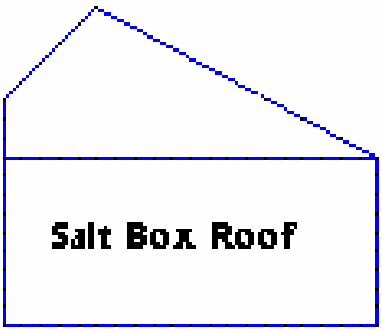
Salt Box Roof

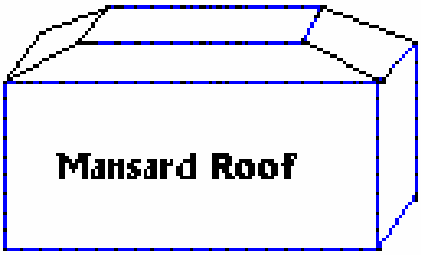
Mansard Roof

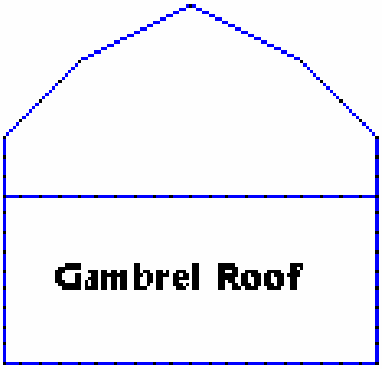
Gambrel Roof

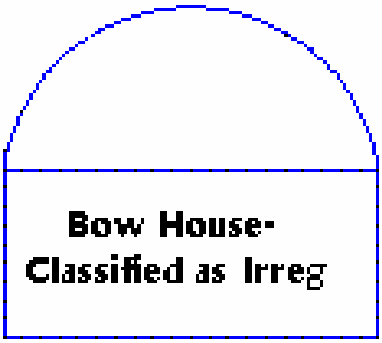
Bow House-
Classified as Irreg

APPENDIX F

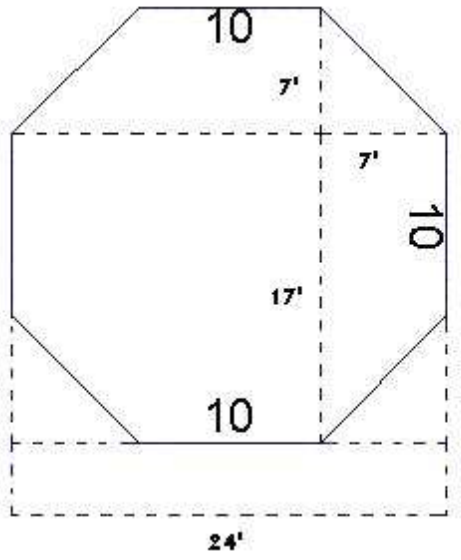

(Only one set is needed when the other angles are the same).

When measuring an octagon, getting interior measurements are critical. However, one can compute the necessary measurements by taking a few extra exterior measurements, as indicated. Then when entry is obtained, the interior measurements can be made to verify the area.

Unqualified Sales List

27-<100% Int Transfer
24-Abutter Sale
37-Bank Foreclosure Sale
45-Boundary Adjustment
40-Business Affil Grntr/E
70-Buyer/Seller Cost Shift
66-Complex Commercial Sale
97-Conservation Easement
48-Court/Sheriff Sale
90-Current Use Assessment
82-Deed Date Old/Incomplete
39-Divorce Party Grntr/E
31-Easement
77-Encumbrances
81-Estate Sale/Fdcy Cov
38-Family/Relat Grntr/E
52-Forced Sale
51-Foreclosure
35-Govmt Agency Grntr/E
13-Improved After 4/1
14-Improved After Sale
58-Installment Sale
00-Investigation in Progress
17-L/B Assessment - L/O Sale
16-L/O Assessment - L/B Sale
57-Large Value in Trade
69-Lease W/Unknown Terms
28-Life Est/Defer 1 Yr+
33-Landlord/Tenant Sale
26-Mineral Rights Only
68-Mortgage Unknown
21-MPC-Can Sell Separately
18-Multi Parcel Sale
20-Multi Town Property
23-No Transfer Stamps
44-Non Market Transfer with Trust as Grantor/ee
11-Not Assessed Separately
56-Other Doubtful Title
47-Other - Sale of Convenience
55-Other/Unspec Deed Cov
67-Personal Property
29-Plotage/Asmbl Impact
49-Pre-Foreclosure Sale
34-Public Util Grntr/E
89-Quick Resale
25-Quick Sale
46-Quitclaim Deed
36-Rel/Char/Ed Grntr/E
98-Sale Related Assessment Changes
12-Subdivision-Assess/Sale
80-Subsidized/Assist Housing
50-Tax Sale
32-Timber Rights
30-Timeshare
99-Unclassified Exclusion
15-Under Construction
59-Unfinish Common Prop
60-Unident in Town Records
22-Unknown Consideration
19-Value in Exchange
87-XS Locale in Sample
88-XS Prop Type in Sample

SECTION 2

PRIOR DRA
GENERAL STATISTICS

Prior Sales Analysis Information

The following data is provided to show the sales ratio and coefficient of dispersion for the town as a whole, as well as the land only strata and the land with buildings strata, as computed by the Department of Revenue Administration, Property Appraisal Division from the most recent report. This shows the condition of the local assessment equity or the lack thereof and the reason a valuation anew is being done. This equalization study by the NH DRA is used to equalize municipal total valuations across the state, as well as determine the local level of overall assessments as compared to local sales activity. It is a thorough analysis and study of the local sales and assessment data performed with assistance from the municipality. As such, it is a good indicator of the condition and quality of the local assessments of the prior year.

Acceptable standards/guidelines, as published by the NH Assessing Standards Board

Assessment to sales ratio:	***90% to 110%***
Coefficient of Dispersion (COD):	***Not Greater Than 20***
Price Related Differential (PRD):	***.97 to 1.03***
Difference between Strata:	***5%***
Strata:	*Land only* *Residential Land & Buildings* *Commercials*
Confidence Level:	***90%***

DRA PRIOR YEAR RATIO RESULTS

The following prior year ratio statistics, developed by the NH DRA, are being provided at the request of the NH DRA. This information is not part of the contract or scope of services or USPAP Standard 6. It is historic, not current data and has no bearing or use in this revaluation. The writer accepts no responsibility for the accurate meaning or use of this data.

Ratio Study Year 2012

Overall Median Assessment to Sales Ratio:	**102.2%**
Coefficient of Dispersion:	**8.9**
Price Related Differential:	**1.01**

	Ratio	**COD**
Residential Land Only Sales:	**N/A**	**N/A**
Residential Land & Building Sales:	**104.6**	**8.9**
Commercial Land & Building Sales:	**N/A**	**N/A**

SECTION 3

VALUATION PREMISE

A. THREE APPROACHES TO VALUE HIGHEST & BEST USE

B. ZONING

C. TOWN PARCEL BREAKDOWN

D. TIME TRENDING

E. NEIGHBORHOOD CLASSIFICATION

F. BASIC MASS APPRAISAL PROCESS

G. ASSUMPTIONS, THEORIES & LIMITING FACTORS

H. TELECOMMUNICATIONS & UTILITIES

A. Three Approaches to Value

Income: The "value" of real estate represents the worth of all rights to future benefits which arise as a result of ownership. An investor purchased property for the benefits (income) that the property is expected to produce. Expectation of receipt of these benefits provides the inducement for the investor to commit his own funds as "equity capital" to ownership of a piece of real estate. The value of the property depends on its earning power. The Income Approach to Value is a method of estimating the present value of anticipated income benefits. This process of discounting income expectancies to a present worth estimate is called "capitalization." This present worth estimate, the result of the capitalization process, is the amount that a prudent, typically informed purchaser would be willing to pay at a fixed time for the right to receive the income stream produced by a particular property.

In mass appraisal, the income approach is generally of limited use as it requires the property owners to provide income and expense information that, for the most part, they are unwilling to provide and do not have to provide it by law. When it is provided, it is almost always with the stipulation that the information will be kept confidential. For the above reasons, the income approach is mostly used as a general check against the market cost approach used in mass appraisal work based on published averages for various property types. Although held confidentially, when income data is provided, it will be considered and noted on the property record card.

Market: The Market Approach to Value is a method for predicting the *market value* of a property on the basis of the selling prices of comparable properties. Market value in the context of this approach means the most probable selling price under certain terms of sale or a sale for cash or the equivalent to the seller with normal market exposure.

Cost: The Cost Approach is that approach in appraisal analysis which is based on the proposition that the informed purchaser would pay no more than the cost of producing a substitute property with the same utility as the subject property. It is particularly applicable when the property being appraised involves relatively new improvements which represent the highest and best use of the land or when relatively unique or specialized improvements are located on the site and for which there exist no comparable properties on the market.

In the "Cost Approach," the property to be appraised is treated as a physical entity, separable for valuation purposes into site and improvements.

Although the three-approach system has become widely used, the Market Approach is clearly the central, if not the only relevant approach in estimating the value of some types of properties. The rationale of the Market Approach is that a purchaser will usually not pay more for a property than he would be required to pay for a comparable alternative property *(principle of substitution)*. Furthermore, a seller will not take less than he can obtain elsewhere in the market. The *method* of the Market Approach is an empirical investigation in which the prediction of the most probable selling price is based on actual qualified market sales of comparable properties.

A qualified sale is one which reflects the true market value of the property sold. Various definitions have been offered for the term "market value," but all are predicated, as a rule, upon the following basic assumptions:

1. That the amount estimated is the highest price in terms of money for which the property is deemed most likely to sell in a competitive market.
2. That a reasonable time is allowed for exposure in the open market.
3. That payment is to be made in cash or on terms reasonably equivalent to cash or on typical financing terms available at the time of appraisal.
4. That both buyer and seller are typically motivated and that the price is not affected by undue stimulus.
5. That both parties act prudently and knowledgeably and have due knowledge of the various uses to which the property may be put.

The following is a recent definition of "market value" approved by the American Institute of Real Estate Appraisers and the Society of Real Estate Appraisers:

> *The highest price in terms of money which a property will bring in a competitive and open market under all conditions requisite to a fair sale, the buyer and seller, each acting prudently, knowledgeably and assuming the price is not affected by undue stimulus.*

As a practical matter, a market value appraisal/assessment is the value the property would most probably or reasonably sell for as of a given date, if sufficient time had been allowed to find a buyer and if the transaction was typical of existing market conditions.

The above definitions were extracted from
The Encyclopedia of Real Estate Appraising 3rd Edition.

It must, however, be noted that the lack of direct local comparable sales data does not mean a feature that adds or detracts from value should be ignored. As assessors, an opinion of value must still be developed and we cannot ignore positive or negative features. NH law requires that all factors affecting value be considered. The knowledge and years of experience of the job supervisor is critical, not only when sales data exists, but more so when lacking credible local sales data, common sense and consistency must prevail.

MARKET MODIFIED COST APPROACH TO VALUE

This approach to valuing a large universe of properties, such as an entire municipality, is the most common approach used in mass appraisal. It is a mixture of the cost and market approaches to value. It recognizes the principal facts or information of the property and uses a consistent cost formula to develop equitable values for all property in the Municipality. Then those cost values are compared to actual sales in the community. The results are used to modify the cost tables to enable the formula to more closely follow the actual real estate market data.

AVITAR's

CAMA: Computer Assisted Mass Appraisal

Mass Appraisal

As defined by the International Association of Assessing Officers (IAAO), mass appraisal is "the process of valuing a group of properties as of a given date, using standard methods, employing common data, and allowing for statistical testing." Mass appraisal utilizes many of the same concepts as single appraisal property appraising, such as supply and demand, highest and best use, and the principles of substitution and anticipation. In addition, in light of the necessity of estimate values for multiple properties, mass appraisal also emphasizes data management, statistical valuation models, and statistical quality control.

The Avitar CAMA (Computer Assisted Mass Appraisal) system being used is defined as a Market Modified Cost Approach to Value. What this means is that the cost approach method of estimating value is recognized as the most appropriate method to value multiple parcels. Using local costs from builders and nationally recognized cost manuals like the Marshall & Swift Cost Guide, base costs for the improvements and material types are created. Local sales are used to develop land values. Then using all the local market sales data, the cost tables are modified to reflect the local market trends. This process is called model calibration. While cost manuals, local contractors and sales data are used to develop preliminary costs for the CAMA's cost tables, it is during the calibration process where all the qualified sales data is used and tested considering several parameters, such as location, size, quality, use and story height. Through multiple reiterations of the statistics, the Job Supervisor fine tunes the model to accurately produce assessments that reasonably match or closely approximate the sales data.

This process is not perfect, as market sales data is subject to the perceptions and emotions of buyers and sellers at any given point it time. While you and I may want to buy a particular house, we will both most likely be willing to pay different amounts and the seller may or may not accept either offer. If the seller accepts a lower value before the higher offer is made, that sale then represents an indication of market value. Was it low because the higher offer wasn't made in time? For example, in a 2002 transaction, a property was offered and well advertised through a real estate agent. An offer was made and rejected. A day later, prior to a counter offer from the first offer, a new offer came in at the asking price and was accepted. Was that the market price? Well consider this:

> Prior to the closing of the property, 30 days later, the buyer was offered $20,000 to simply sign over his purchase and sales agreement to a third party. An additional 10% profit! He refused and lives in the property today, thinking he bought low.
>
> Knowing all this, what is your opinion of the real market value?

The point here is that sales generally indicate value. While they in fact did occur, it is only one indicator of value and not every sale necessarily always reflects the true market value. In the real world, buying and selling of property is almost always subject to some sort of pressure or duress. The seller is selling for a reason, emotional or economic and the buyer is moving to the area for similar reasons, such as being close to family or a new job. In either case, in our experience there is always some form of pressure and it is this mild form of pressure that can cause similar properties in the same neighborhood on the same day to sell for different prices. **Simply stated - the market is imperfect.**

A market modified cost approach to value tends to level out these differences and as such, some values will be below their selling price, while others will be right on or somewhat above, but all should be a reasonable opinion of the most probable market value as of the date of the revaluation.

THE SALES DATA

At the beginning of the process, copies of all qualified arms length sales which occurred in your town over the past two years are compiled. These sales are then sorted into two categories: Vacant and Improved.

The vacant land sales are then analyzed to help us identify neighborhoods, excess land values, lot values, waterfront or view influence and other values/factors necessary to properly, fairly and accurately assess land.

In the case where land sales are few or non-existing, the land residual method is used. While somewhat more technical, it is an equally accurate method whereby all relatively newly built home sales are reviewed, the building values are estimated by the use of cost manuals and local contractors, when available. The building value is then deducted from the sale price, leaving the residual value of the developed land.

We then develop cost tables for improvements to the land. Once all the physical data for each property is collected and the sales data verified, we then compute new total values for each property and test against actual sales data, hence, the Market Modified Cost Approach to value CAMA system.

Please note that not every technique described herein is used in every project. The most appropriate methods are used for each project based on the data available.

HIGHEST & BEST USE

For this revaluation/update, unless otherwise noted on the assessment record card, the highest & best use of each property is assumed to be its current use.

> Individual property highest and best use analysis is not appropriate for mass appraisal.
>
> "Highest & best use," has been defined as: that reasonable, legal and probable use that will support the highest present value.... as of the effective date of the appraisal.
>
> It has been further defined as that use, from among reasonably probable and legal alternative uses, found to be physically possible, appropriately supported, financially feasible and which result in the highest land value. In those cases where the existing use is not the highest & best use, it shall be noted on the individual assessment record card.

B. Zoning

Local zoning, if enacted, is a very important part of the valuation process as it defines what can or can not be done with land in defined areas of the municipality. It further sets the standards for the required lot size and road frontage needed for each zone.

The following pages will define the local zoning as provided by the municipality, as in effect for the assessment date of April 1st, the year of this valuation process.

Proposed changes, if known, will also be discussed and given any due consideration.

ARTICLE 4 - DISTRICT REGULATIONS

4.01 Application of Regulations

Subsequent to passage of this Ordinance, and any applicable amendments, buildings or land shall hereafter be used, constructed, altered, or enlarged only in conformity with the regulations specified herein for the zoning district in which the building or land is located. A permit for the construction, alteration, enlargement, moving, demolition or use of a building or structure shall not be issued by the Building Inspector, unless the requested action complies with the provisions of this Section, or the applicant has been granted a variance or special exception by the Zoning Board of Adjustment.

4.02 Districts

For the purpose of this Ordinance, the Town of Auburn is divided into seven (7) districts as follows:

Full Name	Short Name
Rural	R
Residential-One	R-1
Residential-Two	R-2
Commercial-One	C-1
Commercial-Two	C-2
Village Center	V
Industrial	I

4.03 District Boundaries and Zoning Maps

The location and boundaries of the Auburn zoning districts are shown on "The Zoning Map of the Town of Auburn, New Hampshire," dated December 8, 2006, and signed and certified by the Town Clerk, which is part of this Ordinance. Where any uncertainty exists with respect to the boundary of any District as shown on the zoning map, the following rules shall apply:

(1). Where a boundary is indicated as a highway, street, railroad, watercourse or Town boundary, it shall be construed to be the centerline thereof, or such Town boundary.

(2). Where a boundary is indicated as approximately parallel to a highway, street, railroad, watercourse or Town boundary, it shall be construed to be parallel to the centerline thereof or such Town boundary.

(3). Where a boundary coincides within ten (10) feet or less with a lot line, the boundary shall be construed to be the lot line.

(4). If no natural boundary is given, the location of any boundary shall be determined by use of coordinates identified by permanent bounds.

(5). If a boundary runs through any lot and such lot is of sufficient size to permit conforming lots in each district, the lot may be subdivided so as to create lots in each district, subject to the approval of the Auburn Planning Board, in accordance with the Auburn Subdivision Regulations. If no subdivision is sought or obtained, the entire lot shall be deemed to be in the more restrictive district.

(6). If the land in question cannot be divided to permit conforming lots in the two or more adjoining districts, the entire lot shall be deemed to be in the more restricted district, provided that a minimum of twenty (20%) percent of the lot area falls within the more restrictive district. If less than twenty (20%) percent of the total lot area falls within the more restrictive district, the entire lot shall be considered to fall within the less restrictive area. For purposes of this section, the order of most restricted to least restricted is as follows: R, R-1, R-2, V, C-2, C-1, I.

4.04 District Regulations – General

(1). Unless already specified as an accessory use in its definition, any permitted use or use allowed by special exception in the district regulations of this Ordinance shall be only for use as a principal use. It may, however, be allowed by special exception as an accessory use to any principal use which is permitted or allowed by special exception in that district, unless such combination of uses is otherwise prohibited by this Ordinance.

(2). Any and all uses allowed herein shall also be subject to all other applicable ordinances and regulations of the Town of Auburn including, but not limited to, Article 6, Flood Plain Development Regulations, and to the statutes and regulations of the State of New Hampshire.

(3). All non-residential, commercial and industrial uses, all clustered residential developments and all multi-unit dwellings consisting of more than two dwelling units, regardless of the district in which they are built, shall be subject to Site Plan Review by the Auburn Planning Board prior to the issuance of a building permit.

(4). The minimum lot sizes, yard and frontage dimensions and maximum heights specified in the district regulation for any particular use are subject to any more restrictive provisions required elsewhere in this Ordinance. No dwelling, structure, or use shall be constructed within the yard setbacks, except for lawful fences, retaining wall, sheds with an area of one hundred twenty (120) square feet or less, gazebos, above ground pools, aprons surrounding inground pools, patios, green houses with an area of one hundred (100) square feet or less, or a permitted sign. Within a cluster subdivision, all structures larger than one hundred twenty (120) square feet, except lawful structures as noted above, shall maintain no less than sixty (60) feet from structures located on abutting lots.

4.05 "R" Rural District

(1). Objectives and Characteristics

The Rural District ("R") is designed to permit uses that are compatible with and protective of certain areas that have been and are being used for agricultural and forestry uses, water quality preservation, residential use and public use. This district encompasses those remote areas where intensive development would be premature, given the high public service costs associated with development there.

(2). Permitted Uses

(a). Non-Commercial Agriculture, not including produce stands
(b). Commercial Agriculture-forestry only
(c). Commercial Agriculture
(d). Produce Stand
(e). Home Shop
(f). Home Office
(g). Home Business
(h). Public Educational Facility
(i). Church
(j). Public Recreation Facility
(k). Day Care Center-1 to 6 children
(l). Day Care Center-over 6 children
(m). Nursery School
(n). Single Family Detached Dwelling
(o). Utility Substation
(p). Water Supply Works
(q). Clustered Residential Development
(r). Manufactured Housing/Mobile Home
(s). Municipal Buildings
(t). Accessory Dwelling Unit
(u). Elderly Housing

(3). Uses Permitted by Special Exception

(a). Private Education Facility
(b). Outdoor Commercial Recreation Facility
(c). Indoor Commercial Recreation Facility
(d). Hospitals
(e). Conversion Apartments
(f) Travel Trailer Park/Campground
(g). Cultural Facilities

(4). Lot Size, Frontage, Yards and Height

Minimum Lot Size:	3 acres
Minimum Frontage:	300 feet
Minimum Yard Dimensions:	
Front:	50 feet
Side:	50 feet
Rear:	50 feet
Maximum Height:	
Feet:	35 feet
Stories:	3 stories
Maximum Building Area:	5 %

(5). Clustered Residential or Elderly Housing Development

The following uses shall only be permitted by special exception when located within a clustered residential, elderly or workforce housing development: home shop; home business; day care center - over six children; nursery school; and produce stand.

4.06 "R-1", Residential-One District and "R-2", Residential-Two District

(1). Objectives and Characteristics

Residential districts are designed for the protection of areas that have been and are being developed predominantly for residential dwellings and where road systems can accommodate high traffic volumes. The R-1 District is intended to be primarily residential in character with very limited accessory uses. The R-2 District is a somewhat more rural area with a greater variety of residential and accessory uses permitted. The two districts have the same density and dimensional requirements, but different uses.

(2). Permitted Uses in the R-1 District

a. Utility Substation
b. Single Family Detached Dwelling
c. Public Educational Facility
d. Church
e. Public Recreational Facility
f. Day Care Center-1 to 6 children
g. Commercial Agriculture-Forestry only
h. Home Office
i. Non-Commercial Agriculture-not including produce stands
j. Water Supply Works
k. Manufactured Housing/Mobile Home
l. Municipal Buildings
m. Workforce Housing
n. Accessory Dwelling Unit

(3). Uses Permitted by Special Exception in the R-1 District

a. Clustered Residential Development
b. Conversion Apartments
c. Home Shop
d. Home Business
e. Day Care Center-over 6 children
f. Nursery School
g. Commercial Agriculture
h. Produce Stand
i. Outdoor Commercial Recreation Facility
j. Cultural Facilities
k. Private Education Facilities
l. Veterinary Clinic
m. Elderly Housing
n. Multi-Unit Dwelling

(4). Permitted Uses in the R-2 District

a. Single Family Detached Dwelling
b. Manufactured Housing/Mobile Home
c. Clustered Residential Developments
d. Home Shop
e. Home Office

f. Home Business
g. Non-Commercial Agriculture-not including produce stands
h. Commercial Agriculture-Forestry only
i. Produce Stand
j. Public Educational Facility
k. Church
l. Public Recreation Facility
m. Day Care Center-1 to 6 children
n. Day Care Center-over 6 children
o. Nursery School
p. Utility Substation
q. Water Supply Works
r. Municipal buildings
s. Accessory Dwelling Unit
t. Elderly Housing

(5). Uses Permitted by Special Exception in the R-2 District

a. Commercial Agriculture
b. Conversion Apartment
c. Multi-unit Dwelling
d. Travel Trailer Park
e. Cultural Facilities
f. Private Education Facility
g. Veterinary Clinic
h. Workforce Housing

(6). Lot Size, Frontage, Yards and Height

Minimum Lot Size:	2 acres
Minimum Frontage:	200 feet
Minimum Yard Dimensions:	
Front:	50 feet
Side:	30 feet
Rear:	50 feet
Maximum Height	
Feet:	35 feet
Stories:	3 stories
Maximum Building Area:	5%

4.07 "C-1", Commercial-One District and "C-2", Commercial-Two District

(1). Objectives and Characteristics

The Commercial Districts are designed for the purpose of centralizing the provision of basic goods and services. The Commercial One (C-1) District is intended to allow for regional commercial needs. The Commercial Two (C-2) District is intended to allow for local commercial needs of a low intensity, in keeping with the Village character. The two districts have the same density and dimensional requirements, but different uses. Lot coverage by impervious material in both commercial districts shall be a maximum of forty (40%) percent.

(2). Uses Permitted in the C-1 District

a. Motels/Hotels
b. Sales Establishment
c. Restaurant
d. Fast Food Restaurant
e. Commercial Service Establishment
f. Office Establishment-less than 3,000 square feet of floor area
g. Multi-Unit Commercial Establishment
h. Office Establishment-over 3,000 square feet of floor area
i. Automobile Service Station
j. Automobile Repair Garage
k. Automobile or Similar Vehicle Sales Facility
l. Warehouse Establishment
m. Utility Substation
n. Water Supply Works
o. Outdoor Commercial Recreation Facility
p. Indoor Commercial Recreation Facility
q. Commercial Agriculture-Forestry Only
r. Produce Stand
s. Clustered Commercial Development
t. Municipal Buildings
u. Cultural Facilities
v. Private Education Facility
w. Veterinary Clinic

(3). Uses Permitted by Special Exception in the C-1 District

a. Commercial Agriculture
b. Day Care Center-1 to 6 children
c. Day Care Center-over 6 children
d. Nursery School
e. Social Facility
f. Light Industrial Establishment
g. Heliport
h. Sexually Oriented Business (See added requirements of Section 4.07 (7) below.)

(4). Uses Permitted in the C-2 District

a. Home Shop
b. Home Office
c. Home Business
d. Sales Establishment
e. Restaurant
f. Commercial Service Establishment
g. Office Establishment-less than 3,000 feet of floor area
h. Automobile Service Station
i. Utility Substation
j. Water Supply Works
k. Public Education Facility
l. Day Care Center-over 6 children
m. Nursery School
n. Indoor Commercial Recreation Facility

o. Hospitals
p. Commercial Agriculture
q. Produce Stand
r. Clustered Commercial Development
s. Municipal Buildings
t. Churches
u. Accessory Dwelling Unit to Commercial Establishment
v. Public Recreation Facility
w. Cultural Facilities
x. Private Education Facility
y. Veterinary Clinic
z. Elderly Housing

(5). Uses Permitted by Special Exception in the C-2 District

a. Fast Food Restaurant
b. Multi-Unit Commercial Establishment
c. Automobile Repair Garage
d. Automobile or Similar Vehicle Sales Facility
e. Day Care Center-1 to 6 children
f. Outdoor Commercial Recreation Facility
g. Social Facility
h. Non-Commercial Agriculture-not including produce stands
i. Multi-Unit Dwelling
j. Boarding House
k. Conversion Apartments
l. Mixed Residential /Commercial Use
m. Workforce Housing

(6). Lot Size, Frontage, Yards and Height

Minimum Lot Size:	2 acres
Minimum Frontage:	200 feet
Minimum Yard Dimensions *** (also see below)	
Front:	50 feet
Side:	30 feet
Rear:	50 feet
Maximum Height:	
Feet:	35 feet
Stories:	3 stories
Maximum Lot Coverage:	40%

***Where a commercially zoned lot abuts an R, R-1 or R-2 zone, the minimum side yard requirements shall be increased to 50 feet, and all yards shall be measured from any building, parking space or service area.

(7). Sexually-Oriented Businesses

In addition to meeting the criteria set forth in this Ordinance for a special exception, the following conditions shall also be met by an applicant proposing a sexually-oriented business as part of an application for a special exception in the C-1 zone, and if not met, the use(s) shall be deemed to be a prohibited use:

(a). No sexually oriented business shall be located within one thousand (1000) feet of the property line of a church, cemetery, private educational facility, public or private school, senior center, day care center, hospital, municipal facility, public park, playground, public recreational facility, or dwelling unit;

(b). No sexually-oriented business shall be located within two hundred fifty (250) feet of the right-of-way of Route 101 (including on and off ramps) or Route 28 By-Pass;

(c) No sexually-oriented business shall be located in a multi-use commercial development;

(d) No sexually-oriented material shall be visible from the outside of the building; and

(e) No private rooms or booths shall be constructed as part of the sexually-oriented use.

(8) Addition or Expansion of Single Family Detached Dwelling:

Notwithstanding the provisions of Section 3.05, an addition or expansion to a single family detached dwelling which was lawfully in existence as of March 10, 2009, shall be permitted within the C-2 District, subject to all area and dimensional requirements of Section 4.07(6).

4.08 "V" Village Center District

(1). Objectives and Characteristics: The Village Center District is designed to promote and encourage the most efficient, cost effective and beneficial consolidation of land development which will: preserve open space; create more cost-efficient roads, utilities, and other public and private infrastructures; and improve the ability of the Town to provide more rapid and efficient delivery of public safety services. This District is also created to provide private property owners with a method for realizing the inherent value of their real property in a manner conducive to the creation of substantial benefit to the environment and to the Town's property tax base. The Village Center District is also intended to promote a "town center" area which will provide for the harmonious and aesthetically pleasing development of the Town, and where, through the consolidation of municipal services, small-scale retail/commercial development, limited residential use, and mixed use development, the Town's rural charm and character is preserved.

(2). Boundaries: The Village Center District is an overlay district with the following boundaries:

The land between Eaton Road and Raymond Road; the land on the Northwest corner of the intersection of Manchester Road and Raymond Road, and the land along Route 121 to Bunker Hill Road, (current underlying zone Commercial – Two (C-2).

(3). Permitted Uses

(a). Existing Uses: Subject to any existing requirement for site plan approval by the Planning Board, any use which is permitted in either underlying district, (Commercial - 2 or Residential - 2) is permitted, except that the following uses are not permitted:

(i). Commercial Agriculture – Forestry included
(ii). Manufactured Housing Park
(iii). Mobile Home Park (single dwellings permitted)
(iv). Travel Trailer Park

(b). Additional Uses: Subject to any existing requirement for site plan approval by the Planning Board, the following uses are permitted in the Village Center District, even if they are not permitted in the existing underlying district:

(i) Workforce Housing - by Special Exception only

(4). Dimensional Requirements

(a). Minimum Lot Size: 1 acre

(b). Minimum Frontage: 100 feet

(c). Minimum Yard Dimensions:

(i) Front: 50 feet
(ii) Side: 20 feet
(iii) Rear: 20 feet

(d). Maximum Height:

(i) Feet: 42
(ii) Stories: 3
(iii) Maximum Building Area: To be determined by lot coverage limitations in the underlying zone.

(5). Architectural Design Standards

(a). General Purpose: In order to maintain a consistent and aesthetically pleasing appearance in the development of the Village Center District, commercial buildings and structures must comply with design standards guidelines which will be administered by the Planning Board in its exercise of site plan review. The purpose of the guidelines is to provide design standards which assist with the development, renovations and restorations of commercial properties to complement the overall traditional, rural New England-style appearance of the community. The guidelines are not intended to restrict innovation or variety in construction, restoration or renovation of commercial buildings and structures. Rather, the guidelines are intended to improve the aesthetic appeal of the Village Center District, to conserve and/or increase property values, and to encourage the type of development envisioned for the Village Center District.

(b). Architectural Plans: No building permit or site plan approval shall be granted for a commercial or multi-family building unless the applicant submits an architectural plan drawn to scale that meets all of the requirements of the Planning Board. The Architectural Plan shall include, at a minimum, the following information:

(i) floor plan;
(ii) building elevation (all four sides);
(iii) type of windows and doors to be installed on building; and
(iv) type of building material to be used on the exterior of building;
(v) any other details, which the Planning Board may, in its discretion, request be included with the Architectural Plan.

(c). Evaluation Factors: The Planning Board shall consider the following factors in its determination of whether a proposed site and building design is acceptable:

(i) Conformance to the general purpose of the architectural design guidelines;
(ii) Architectural character;

(iii) Building materials and subdued color considerations;
(iv) Vehicular and pedestrian circulation and parking;
(v) Harmony and compatibility of project compared to existing site and neighborhood;
(vi) Lighting design;
(vii) Integration of landscape and buffer areas; and
(viii) Retention, alteration, or removal of existing structures and site features.

(d) Specific Architectural Requirements: The Planning Board may, in its discretion, determine that one or more the following requirements should not apply to a particular project, or that one or more factors should be waived for a particular project. The Planning Board will at all times consider whether environmentally responsible building practices require that the Board change or waive any of the requirements.

(i) The building's orientation, setback, alignment with the street, and spacing relative to other buildings will be considered in the overall design. Reuse of existing structures and landscape features is encouraged. An overall design which will create harmony with the area surrounding the project is the goal. To the extent feasible, a project should be designed to allow for ease of access between commercial uses located adjacent to or nearby the project.

(ii) Windows should comprise a minimum of five percent (5%) of the exterior wall surface of a building facing a public street, right-of-way, parking area or developed area. All windows and doorways should be encased with trim.

(iii) Site lighting must conform to the specifications in this Ordinance and the Town of Auburn Site Plan Regulations. No light should spill or reflect on to adjacent properties. In accordance with the sign regulations of this Ordinance, illuminated signs should be lit only when the premises is open for business.

(iv) Exterior colors of buildings and accessories are encouraged to be muted and to blend with surrounding buildings. Bright colors are generally discouraged.

(v) All rooftop mechanical equipment units should be located so that they are not visible from the street level or from other public areas at ground level. Wall or ground mounted

equipment shall be screened from public view with fences or vegetation.

(vi) All existing man-made and natural features of the site should be integrated into the site to the extent feasible. Buildings should, where feasible, be clustered to encourage the preservation of open space. Sidewalks and pedestrian pathways should be included where feasible.

(vii) Variation in detail, form and siting of roof lines is encouraged. Long horizontal roof lines and warehouse style designs are discouraged. Buildings should have pitched or gabled roofs where practical. Shed, gambrel and barn style roofs are also acceptable. Roofs must have appropriate overhangs.

(viii) All building facades will receive design consideration. A facade unrelated to the rest of the building or the architecture in the surrounding area will not be accepted.

(ix) Exterior surfaces of materials should be covered with traditional materials or products which simulate natural materials, including but not limited to clapboards, shingles, stone, brick, architecturally treated concrete, vinyl siding or similar materials. Exposed plain cinder block, corrugated steel, sheet plastic or sheet fiberglass are not acceptable. Pitched roofs should be constructed of shingles, metal roofing, or other materials traditionally used in roofing in small towns of New England.

(x) Illuminated or brightly colored awnings are not acceptable. Awnings should be made of transparent materials such as glass or clear Plexiglass type products. Awning covers designed for shade should be made of fabric or simulated fabric-type material.

(xi) Fences should be used only where necessary. Fences should be constructed in traditional New England style and constructed of traditional materials, such as picket, split rail, wrought iron, brick or stone. Chain link fences are discouraged.

4.09 "I" Industrial District

(1). Objectives and Characteristics

The Industrial District is designed for the purpose of providing a rationally planned location for industrial uses where vehicular access and future utility service can accommodate such use. Lot coverage by impervious material shall be a maximum of forty (40%) percent.

(2). Permitted Uses

(a). Industrial Establishment
(b). Lumber Treatment Establishment
(c). Industrial Repair Garage
(d). Utility Substation
(e). Water Supply Works
(f). Restaurant
(g). Fast Food Restaurant
(h). Office Establishment-over 3,000 square of floor area
(i). Light Industrial Establishment
(j). Clustered Industrial Development
(k). Automobile or Similar Vehicle Sales Facility
(l). Warehouse Establishment
(m). Commercial Agriculture-Forestry only
(n). Municipal Buildings
(o) Veterinary Clinic

(3). Uses Permitted by Special Exception

a. Outdoor Commercial Recreation Facility
b. Indoor Commercial Recreation Facility
c. Sales Establishment
d. Commercial Service Establishment
e. Office Establishment – less than 3,000 square feet of floor area
f. Junk Yard
g. Excavation and Soil Removal*
h. Heliport
i. Private Airstrip
j. Antenna and Communication Towers
k. Employee Amenities, including but not limited to: fitness center; dry cleaner; personal services or bank machine, when established as part of a permitted use under Section 4.09(2).

*Excavation and/or soil removal requires a permit from the Planning Board and must be done in accordance with the Auburn Excavation Regulations.

(4). Lot Size, Frontage, Yards and Height.

Minimum Lot Size:	*3 acres
Minimum Frontage:	300 feet
Minimum Yard Dimensions:	** (also see below)
Front:	50 feet
Side:	(To be determined by Site Plan Review)
Rear:	(To be determined by Site Plan Review)
Maximum Height:	***(also see below)
Feet:	42 feet
Stories:	3 stories

* If the lot is serviced by municipal water and/or sewer service, the Planning Board may, in its discretion, and upon request, grant a reduction in the lot size requirement.

** Where an industrially zoned lot abuts an R, R-1 or R-2 zone, the minimum yard requirements shall be increased to 50 feet and all yards shall be measured from any building, parking space or service area.

***Height restrictions shall not apply to necessary appurtenant structures such as spires, belfries, cupolas, domes, smokestacks, flagpoles, antennae or similar structures.

(5). Permitted Accessory Uses:

In addition to those uses allowed as accessory uses in the Industrial District, a "private educational facility," a "nursery school," and a "day care center" may be allowed in the Industrial District if it is accessory to, and incidental to, another permitted business in the District, and it is limited to providing services to the children of employees or owners of the permitted business.

On-site employee housing may be allowed as an accessory use provided the housing is incidental to, and necessary for, the operation of a permitted business in the zone.

ARTICLE 5 - WETLANDS AND WATERSHED PROTECTION REGULATIONS

5.01 Authority and Creation:

This Article creating a wetlands and watershed protection overlay district is enacted pursuant to the general authority granted by N.H. R.S.A. 674:16, and the specific authority granted by R.S.A. 674:21,(j), Innovative Land Use Controls, as environmental characteristics zoning.

5.02 Administration:

The Planning Board is charged with administering these regulations and with granting conditional use permits in accordance with Sections 5.09 and 5.10 of this Article.

5.03 Findings and Purposes:

(1) Findings:

Wetlands, vernal pools, ponds, lakes, and streams are significant natural resources of the Town because of their size or functional values, such as flood storage, wildlife habitat, and the enhancement of water quality and/or quantity. The preservation of these water resources promotes the general public health, safety, welfare and convenience in the Town of Auburn.

(2) Purposes:

It is intended that these water resource areas remain undisturbed to the extent practical. To further the goal of preserving these water resources, these regulations are intended to:

(a) Maintain and enhance the quality and quantity of surface waters and groundwater by preserving the ability of wetlands and adjacent upland areas to filter pollution, trap sediment, retain and absorb chemicals and nutrients, and produce oxygen;
(b) Prevent unnecessary expense, or minimize any necessary expense, to the Town and the public in providing and maintaining essential services and utilities, such as wastewater collection and treatment, drainage facilities, and public water supply, which may arise because of the inappropriate use of land within the wetlands and watershed areas;
(c) Minimize impacts to existing land uses and lots;
(d) Prevent the destruction of, or significant changes to, those wetland areas, related water bodies and adjoining land which provide flood protection, protect persons and property against the hazards of flood inundation by assuring the continuation of the natural flow patterns of streams and other watercourses, and provide for nutrient attenuation and augmentation of stream flow during dry periods;
(e) Encourage those uses that can be appropriately and safely located within the wetlands and watershed areas; and
(f) Protect native wildlife habitat and natural vegetation upon which a variety of upland and aquatic species are dependent for purposes of breeding or sustenance.

5.04 Delineation of Wetlands and Watershed Protection Area District and Boundaries:

(1) Wetlands and Watershed Protection Overlay District: This overlay district shall consist of all wetlands, as defined in Section 2.02(105) of this Ordinance, as well as the applicable buffer zone, as defined below:

(a) Wetlands and Watershed Protection Area – Level 1: Those areas which meet the definition of wetland as set forth in section 2.02(105) of this Ordinance, and a buffer zone of one hundred twenty-five (125) feet setback from the edge of:

(i) Wetlands indicated as Tiers 1, 2a, 2b, and 3 on the Wetlands Inventory Map prepared by West Environmental on file at the Auburn Town Clerk's Office and Planning Department; and

(ii) All other wetlands greater than five thousand (5,000) square feet in size that have been determined to have one or more of the following functions and/or values per ACOE-HM:

(A) Groundwater recharge/discharge;
(B) floodflow alteration;
(C) sediment/toxicant retention;
(D) nutrient removal/retention/transformation;
(E) wildlife habitat;
(F) uniqueness heritage;
(G) endangered species; and

(iii) Bodies of water, brooks and streams; and

(iv) Vernal pools as established by a New Hampshire Certified Wetlands Scientist.

(b) Wetlands and Watershed Protection Area – Level 2: Those areas which meet the definition of wetland as set forth in section 2.02(105) of this Ordinance, and a buffer zone of seventy-five (75) feet setback from the edge of:

(i) All other wetlands not meeting the criteria of Section 5.04(1)(a)(i) above; and

(ii) All other wetlands greater than five thousand (5,000) square feet in size that do not meet the criteria set forth in Section 5.04(1)(a)(ii) above and that are not contiguous with surface waters as established by a New Hampshire Certified Wetlands Scientist.

(c) Wetlands and Watershed Protection Area – Level 3: Those areas which meet the definition of wetland as set forth in section 2.02(105) of this Ordinance, and a buffer zone of twenty-five (25) feet setback from the edge of:

(i) Isolated wetlands less than five thousand (5,000) square feet in size and determined not to be a vernal pool by a New Hampshire Certified Wetlands Scientist;

(ii) Drainage basins and/or treatment swales constructed under an approved project unless they contain a perennial stream; and

(iii) Private ponds constructed under an approved project.

(2) Method of Evaluation:

When a wetland is not defined on the Wetlands Inventory Map prepared by West Environmental, as referenced above in Section 5.04(i)(a)(i), the United States Army Corps of Engineers, Highway Methodology Workbook Supplemental (ACOE-HM), shall be used to evaluate and determine the wetland values and functions when evaluation of such is necessary.

(3) Application of Buffers:

Buffers are applied without regard to lot lines and municipal boundaries, except that when a wetland is bounded by a Town Class V or better roadway, or a State or federal highway existing at the time of adoption of this Ordinance, buffers are not applied to properties directly across the right of way.

(4) Boundary Location:

(a) If a boundary of the Wetlands and Watershed Protection Area (WWPA) is disputed by either the Planning Board or an applicant, the exact location of the boundary shall be determined by the Planning Board, in consultation with the Conservation Commission.

(b) The Planning Board, at the applicant's expense, may engage a wetland scientist and/or certified soil scientist to determine the precise location of the WWPA boundary, using the methodology consistent with N.H. Administrative Rules Wt 100-800, and in accordance with the "1987 Corps of Engineers Wetlands Delineation Manual," or the most current methodology accepted by the New Hampshire Wetlands Bureau. As an alternative, the applicant may retain such a scientist, acceptable to the Planning Board and Conservation Commission, to make such

determination. A report of the scientist's findings shall be submitted to the Planning Board and the Conservation Commission, and shall include, if warranted, a revised wetland map of the area in question, along with a written report of the results of the investigation, together with any data forms completed.

(5) Boundary Dispute:

If a landowner chooses to question the boundaries of a given wetland, the landowner shall submit documentation prepared by a certified wetlands scientist in accordance with Section 5.04(b). The Planning Board shall consider the documentation at a public hearing, and may require review of said documentation, at the applicant's expense, by an independent New Hampshire certified wetlands scientist.

(6) Minimum Lot Size and Density:

Except as otherwise provided in this Section, the creation of the Wetlands and Watershed Protection District is not intended to affect the minimum lot size requirements or density calculations required for the underlying zoning district, as such requirements are set forth in Article 4 of the Auburn Zoning Ordinance. However, the land area outside of the Wetlands and Watershed Protection Area must be sufficient to support all intended development in accordance with the terms of the Auburn Zoning Ordinance.

5.05 Permitted Uses:

The following proposed uses are permitted in the Wetlands and Watershed Protection Area:

(1) Wildlife habitat development and management;

(2) Conservation areas and nature trails, using Best Management Practices for Erosion Control during trail maintenance and construction, provided that the Planning Board, in consultation with the Conservation Commission, reviews and approves plans for such areas and trails prior to their development;

(3) Recreation, including open-air recreational uses consistent with the purpose and intent of Section 5.03, such as cross-country skiing, ice skating, and hiking;

(4) Education, including natural and environmental sciences walks, wildlife and botanical studies and similar activities;

(5) Seasonally permitted hunting and fishing, as regulated by the State of New Hampshire;

(6) Production, cultivation, growing, and harvesting of any fruit, vegetable, floricultural or horticultural crops, except turf grasses, conducted in accordance with Best Management Wetlands Practices for Agriculture, (July 1993, amended September 1998), but not within seventy-five (75) feet of the edge of wet of the adjacent wetland. Fertilization shall be limited to lime and wood ash within the boundary of the WWPA;

(7) Removal of hazardous trees;

(8) Removal of "invasive" vegetation conducted in accordance with the then-current Best Management Practices for Erosion Control;

(9) Accessory structures of two hundred (200) square feet or less, that do not require clearing, excavation, filling or grading for the installation or placement of the accessory structures. Such accessory structures cannot be located within seventy-five (75) feet of any area meeting the requirements of a Level 1 Wetlands and Watershed Protection Area, within fifty (50) feet of a Level 2 Wetlands and Watershed Protection Area, or within twenty-five (25) feet of a Level 3 Wetlands and Watershed Protection Area.

(10) WWPA mitigation, as outlined in Section 5.12 of this Article.

Any uses not listed in this Section are expressly prohibited in the Wetlands and Watershed Protection Area.

5.06 Prohibited Uses and Activities:

(1) No septic system, lawn, yard, parking lot or landscaping shall be constructed within the WWPA and no structure shall be constructed within the WWPA, except for minor accessory structures expressly permitted under the terms of Section 5.05(9) and structures permitted by a conditional use permit issued by the Planning Board, subject to applicable buffer zones, and structures which are normally associated with use in or near water or relate to transportation over water.

(2) In addition, no storage of petroleum products, hazardous chemicals or material shall occur within the WWPA. No chemical fertilizers, pesticides, insecticides, or herbicides shall be used within the WWPA.

5.07 Uses Permitted by Conditional Use Permits:

The Planning Board may grant conditional use permits for the following uses within the Level 2 and Level 3 WWPAs:

(1). Roads and other access ways;
(2). Drainage ways;
(3). Pipelines, power lines and other transmission lines;

(4). Docks, boat launches, and piers;
(5). Domestic water wells, and associated ancillary pipes and equipment;
(6). Replacement septic tanks and leach fields where evidence is submitted that no alternative location is available on the property;
(7). Expansion of existing single family dwelling which was in existence as of March 10, 2009;
(8). Miscellaneous trimming and pruning of forestry stock according to good forestry practices;
(9). Tree farming and forestry according to practices approved by the Planning Board;
(10). Agriculture;
(11). Ponds planned and executed under the direction of the N.R.C.S. (formerly known as USDA-SCS);
(12). Wildlife refuge and/or conservation area;
(13. Wharves, boathouses, and bridges;
(14). Wetlands mitigation, remediation, restoration and protection activities;
(15. Fire ponds, cisterns and dry hydrants; and
(16). Retention basins and drainage systems.

5.08. Relief from One-Hundred Twenty-Five (125) Foot Setback from Level 1; Seventy-Five (75) Foot Setback from Level 2; and Twenty-Five (25) Foot Setback from Level 3 Wetland and Watershed Protection Area:

(1). Variance Required:

(a) Wetlands and Watershed Protection Area – Level 1: There will be no conditional use permits issued for relief from the one-hundred twenty-five (125) foot setback from a Level 1 Wetland and Watershed Protection Area, except for those uses permitted under the Minor Conditional Use Permit process set forth in Section 5.10 for this Article. Any other request for relief within the one-hundred twenty-five (125 foot setback from a Level 1 Wetland and Watershed Protection Area shall require a request for a variance from the Auburn Zoning Board of Adjustment, pursuant to Article 14.09 of this Ordinance.

(b) Wetlands and Watershed Protection Area – Level 2: Except for the allowable activities set forth in Section 5.05, any request for relief from the seventy-five (75) foot setback of the Level 2 Wetland and Watershed Protection Area shall require a request for a variance from the Auburn Zoning Board of Adjustment, pursuant to Article 14.09 of this Ordinance.

(c) Wetlands and Watershed Protection Area – Level 3: Except for the allowable activities set forth in Section 5.05, any request for relief from the twenty-five (25) foot setback of the Level 3 Wetland and Water Protection Area shall require a request for a variance from the Auburn Zoning Board of Adjustment, pursuant to Article 14.09 of this Ordinance.

(2) Conservation Committee: Prior to holding a hearing on a request for a variance for relief from the requirements of Article 5, the Zoning Board of Adjustment shall require that the variance application, and all materials submitted in support of the application, be reviewed by the Auburn Conservation Committee. The Zoning Board shall review and consider the Conservation Committee's comments prior to granting any such variance.

5.09. Administration of Conditional Use Permits:

(1). Application

(a) Application Form: An application for a conditional use shall be initiated by filing an application with the Planning Board. The Planning Board is authorized to produce an application form for Conditional Use Permit Applications and Minor Conditional Use Permit Applications, which may provide for additional submission requirements as the Planning Board deems necessary.

(b). Subdivision and Site Plan Review: In the event that the applicant is also seeking subdivision and/or site plan approval from the Planning Board, the conditional use permit application hearing may occur simultaneously with a hearing on a subdivision or site plan application for the same project.

(2) Summary of Process:

(a) The Planning Board shall refer the conditional use permit application to the Conservation Commission for review and comment prior to the public hearing on the application. In acting on the application, the Board shall consider any written comments or reports received from the Conservation Commission, as well as any verbal comments made by Conservation Committee members at any conditional use permit hearing.

(b). After holding a duly noticed public hearing on the application, at which the Planning Board determines that the application is complete, and then considers the factors set forth herein in Section 5.09(5)(6), the Planning Board shall then vote to approve the application as presented, approve it with conditions, or deny it.

(c). Any decision of the Planning Board granting a conditional use permit shall be noted on the recorded plan.

(d). The duration of a conditional use permit shall be one (1) year. The Planning Board may grant extensions for an additional year, not to exceed four (4) years in total.

(e). Any person aggrieved by a Planning Board decision on a conditional use permit may appeal that decision to the Superior Court in the manner provided by RSA 677:15.

(3) Application Requirements:

(a) Required Documents:

(i) Completed Application Form

(ii) Plot Plan: The applicant shall submit a plot plan showing actual dimensions relative to:

(A) proposed improvements;

(B) distance to the nearest wetland; and

(C) delineation of wetland and classification of wetland level status, (under Section 5.04), which may require a determination by a New Hampshire Certified Wetlands Scientist.

(iii) Copy of Town of Auburn Tax Map

(iv) Copy of Town of Auburn Prime Wetlands Map

(v) List of Abutters with Mailing Addresses (abutters include all properties within 200 feet of subject parcel property lines); and

(vi) Appropriate Application Fees (see Conditional Use Permit Application Form).

(b) Optional – Investigative or Scientific Studies:

An applicant may submit the results of any special investigative or scientific studies prepared in association with the proposed development, with evidence that may include a functional analysis prepared by a person or firm experienced in evaluating wetlands and watershed protection areas. The Planning Board may, in appropriate cases, require such investigations or studies when it deems such necessary to evaluate an application for a conditional use permit under this Section. The cost of such investigation or study shall be borne by the applicant.

(4). Hearing Procedure:

(a) Burden of Proof:

The applicant for a conditional use permit bears the burden of persuasion, through the introduction of sufficient evidence through testimony or otherwise, that the development and any mitigation, if completed as proposed, will comply

APPENDIX A
ZONING MATRIX OF USES AND DISTRICTS

P= Permitted Use S= Special Exception X= Not Allowed

TYPE OF LAND USE	ZONING DISTRICTS						
PUBLIC AND INSTITUTIONAL	**R**	**R1**	**R2**	**C1**	**C2**	**I**	**V**
1 Public Educational Facility	P	P	P	X	P	X	P
2. Church	P	P	P	X	P	X	P
3. Public Recreational Facility	P	P	P	X	P	X	P
4. Day Care Center, 1 to 6 Children	P	P	P	S	S	X	S
5. Day Care Center, over 6 Children*	P	S	P	S	P	X	P
6. Private Education Facility*	S	S	S	P	P	X	P
7. Nursery School*	P	S	P	S	P	X	P
8. Outdoor Commercial Recreational Facility	S	S	X	P	P	S	S
9 Indoor Commercial Recreational Facility	S	X	X	P	P	S	P
10 Social Facility	X	X	X	S	S	X	S
11. Hospitals	S	X	X	X	P	X	P
12. Municipal Buildings	P	P	P	P	P	P	P
13. Cultural Facilities	S	S	S	P	P	X	P

* In a Clustered Residential Development the following uses are allowed by Special Exception: home shop; home business; daycare center (over 6 children); nursery school, and produce stand.

AGRICULTURE AND FORESTRY	**R**	**R1**	**R2**	**C1**	**C2**	**I**	**V**
1 Non Commercial Agriculture, Not Including Produce Stands	P	P	P	X	S	X	S
2. Commercial Agriculture, Forestry Only	P	P	P	P	P	P	X
3. Commercial Agriculture	P	S	S	S	P	X	P
4. Produce Stand	P	S	P	P	P	X	P

RESIDENTIAL	**R**	**R1**	**R2**	**C1**	**C2**	**I**	**V**
1 Single Family Detached Dwelling	P	P	P	X	P	X	X
2. Manufactured Housing/Mobile Home**	P	P	P	X	X	X	X
3. Multi-Unit Dwelling	X	P	S	X	S	X	S
4. Boarding House	X	X	X	X	S	X	S
5. Clustered Residential Development	P	S	P	X	X	X	X
6. Conversion Apartment	S	S	S	X	S	X	S
7. Accessory Dwelling Unit	P	P	P	X	P	X	X
8. Accessory Dwelling Unit to Commercial Establishment	X	X	X	X	P	X	P
9. Elderly Housing	P	S	P	X	P	X	P
10. Workforce Housing	X	P	S	X	S	X	S
11. Mixed Residential/Commercial Use	X	X	X	X	S	X	S

APPENDIX A CONTINUED

COMMERCIAL	R	R1	R2	C1	C2	I	V
1 Home Shop	P	S	P	X	P	X	P
2. Home Office	P	P	P	X	P	X	P
3. Home Business	P	S	P	X	P	X	P
4. Motels/Hotels	X	X	X	P	X	X	X
5. Sales Establishment	X	X	X	P	P	S	P
6. Restaurant	X	X	X	P	P	P	P
7. Fast Food Restaurant	X	X	X	P	S	P	S
8. Commercial Service Establishment	X	X	X	P	P	S	P
9. Office Establishment under 3,000 sq. ft.	X	X	X	P	P	S	P
10. Office Establishment over 3,000 sq. ft.	X	X	X	P	X	P	X
11. Multi-Unit Commercial Establishment	X	X	X	P	P	X	P
12. Automobile Service Station	X	X	X	P	S	X	S
13. Automobile Repair Garage	X	X	X	P	S	X	S
14. Automobile or Similar Vehicle Sales Facility	X	X	X	P	S	P	S
15. Warehouse Establishment	X	X	X	P	X	P	X
16. Light Industrial Establishment	X	X	X	S	X	P	X
17. Travel Trailer Park/Campground	S	X	X	X	X	X	X
18. Clustered Commercial Development	X	X	X	P	P	X	P
19. Veterinary Clinic	X	S	S	P	P	P	P
20. Sexually Oriented Business***	X	X	X	S	X	X	X

*** Subject to additional requirements of Section 4.07(7)

INDUSTRIAL	R	R1	R2	C1	C2	I	V
1 Industrial Establishment	X	X	X	X	X	P	X
2. Lumber Treatment Establishment	X	X	X	X	X	P	X
3. Junk Yards	X	X	X	X	X	S	X
4. Industrial Repair Garage	X	X	X	X	X	P	X
5. Clustered Industrial Development	X	X	X	X	X	P	X

MISCELLANEOUS	R	R1	R2	C1	C2	I	V
1 Utility Substation	P	P	P	P	P	P	P
2. Water Supply Works	P	P	P	P	P	P	P
3. Excavation and Soil Removal	X	X	S	X	X	S	X
4. Heliport	X	X	X	X	X	S	X
5. Private Airstrip	X	X	X	X	X	S	X
6. Antennas and Communication Towers	X	X	X	X	X	S	X
7. Permanent Storage Facility	S	S	S	S	S	S	S
8 Temporary Storage Facility	X	X	X	X	X	P	X
9. Employee Amenities, including but not limited to: fitness center, dry cleaner, personal services or bank machine, when established as part of a permitted use in the Industrial District.	X	X	X	X	X	X	X

APPENDIX B
ZONING TABLE OF DIMENSIONS

DISTRICT	MINIMUM LOT SIZE	MINIMUM FRONTAGE	MINIMUM DIMENSIONS Front Yard	Side Yard	Rear Yard	MAXIMUM HEIGHT Feet	Stories
R	3 acres	300 feet	50 feet	50 feet	50 feet	35	3
R1, R2	2 acres	200 feet	50 feet	30 feet	50 feet	35	3
C1, C2	2 acres	200 feet	50 feet	30 feet	50 feet	35	3
I	3 acres	300 feet	50 feet	(* see note)		42	3

* To be determined at Site Plan Review

Note: See specific sections of this Ordinance for additional requirements.

APPENDIX C
FLOOD INSURANCE RATE MAP

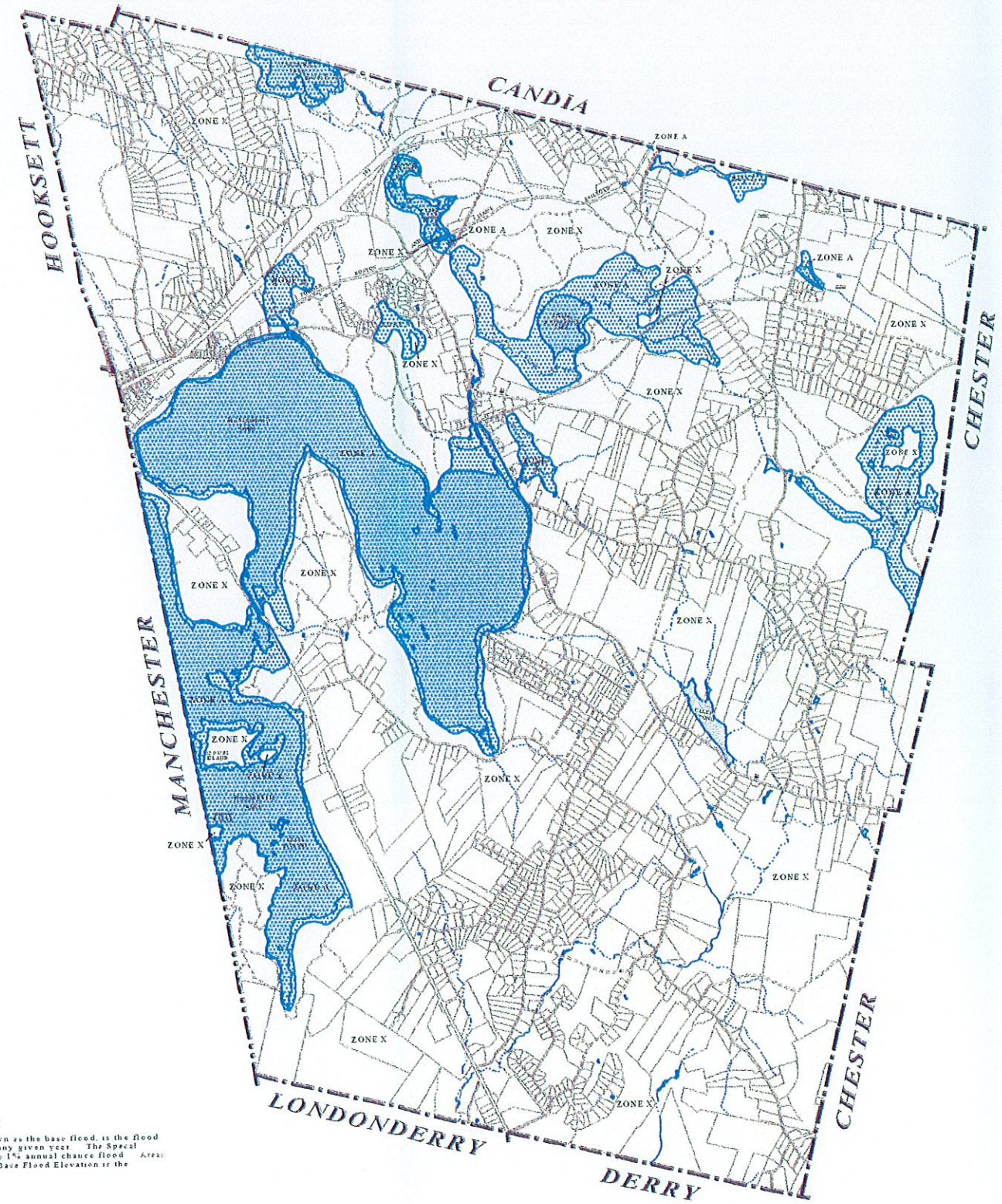

LEGEND

SPECIAL FLOOD HAZARD AREAS

The 1% annual chance flood (100-year flood), also known as the base flood, is the flood that has a 1% chance of being equaled or exceeded in any given year. The Special Flood Hazard Area is the area subject to flooding by the 1% annual chance flood. Areas of Special Flood Hazard include Zones A and AE. The Base Flood Elevation is the water-surface elevation of the 1% annual chance flood.

ZONE A - No Base Flood Elevations determined

OTHER AREAS

ZONE X - Areas determined to be outside the 0.2% annual chance floodplain

SOURCE: DIGITIZED FROM FEMA / FIRM (5/17/05)
MAP INDEX NUMBERS 33015C0110D1A & 33015C0120D2A

SPECIAL FLOOD HAZARD AREA MAP

Prepared by: ROLLARD ASSOCIATES, 19 HOLLAND ROAD, HOOKSETT, NH 03106, (603) 485-3238, (603) 485-8333

Date of original map: December 5, 2006
Date of latest revision:
File: AUBURN
Scale: 1"=2000'

The data on this map has been compiled from a variety of sources and is based on information provided voluntarily by private owners and official sources and is not to be considered legal location of property boundary lines. The Town of Auburn assumes no responsibility for the accuracy of individual parcels.

PROPERTY MAP
AUBURN
NEW HAMPSHIRE

GRAPHIC SCALE
(IN FEET)
1 inch = 2000ft

FLOOD MAP

APPENDIX D
ZONING MAP

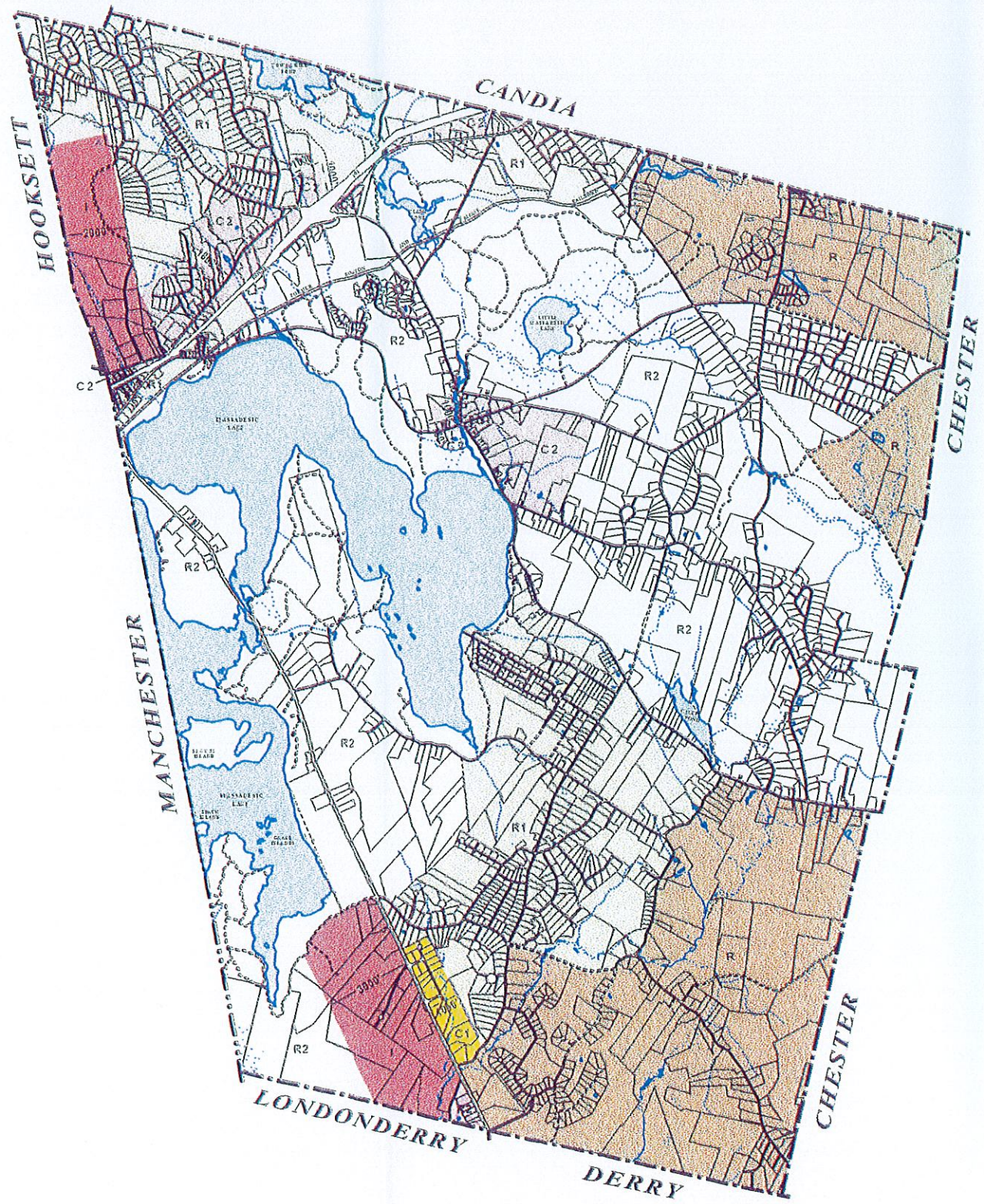

ZONING DISTRICTS

- Rural
- Residential 1
- Residential 2
- Commercial 1
- Commercial 2
- Industrial

ZONING MAP

PROPERTY MAP
AUBURN
NEW HAMPSHIRE

GRAPHIC SCALE
(IN FEET)
1 inch = 2000 ft.

The data on this map has been compiled from a variety of sources granted voluntarily by private owners and official sources and is not to be construed as a legally recorded boundary survey. The TOWN OF AUBURN assumes no responsibility for the accuracy of individual parcels.

Prepared by
ROLLAND ASSOCIATES
TIMOTHY J. BROOK
AUBURN, NH 03032-1528
(603) 483-5253

Date of original dwg.
Date of latest rev. December 5, 2006
File: AUBURN
Scale: 1" = 2000'

ZONING MAP

C. Town Parcel Breakdown

Auburn Parcel Count

	# of Parcels	Value
RESIDENTIAL LAND ONLY (not including current use):	153	$ 14,164,400
RESIDENTIAL LAND ONLY WITH CURRENT USE:	65	$ 590,017
RESIDENTIAL LAND & BUILDING (not including current use): Median: $ 277,050	1792	$ 523,208,100
RESIDENTIAL LAND & BUILDING WITH CURRENT USE:	49	$ 16,017,095
MANUFACTURED HOUSING ON OWN LAND:	13	$ 2,376,300
MANUFACTURED HOUSING ON LAND OF ANOTHER:	120	$ 639,700
RESIDENTIAL CONDOMINIUMS:	Included in Residential Buildings	
DUPLEX & MULTI-FAMILY:	35	$ 11,920,135
COMMERCIAL/INDUST. LAND ONLY (not including current use):	27	$ 7,456,300
COMMERCIAL/INDUST. LAND & BUILDING (not including current use):	77	$ 39,282,300
COMMERCIAL/INDUST. WITH CURRENT USE:	1	$ 192,221
UTILITY:	4	$ 8,441,600
TOTAL TAXABLE:	2336	$ 624,288,168
TOTAL EXEMPT/NONTAXABLE:	126	$ 55,585,900
TOTAL NUMBER OF PARCELS:	2462	
(TOTAL NUMBER OF CARDS):	2506	
PROPERTIES WITH VIEWS (included above):	54	
PROPERTIES WITH WATER FRONTAGE (included above):	35	
DRA CERTIFICATION YEAR:	2013	

D. Time Trending

This is the process by which sales data is equalized to account for time. The "market" is dynamic and ever changing. Over time, either, stable, appreciating or depreciating. It is this effect of time that must be analyzed to enable the reliable use of sales 1 or 2 years prior to, or even after the assessment date.

The analysis of property which has sold twice in a relatively short period of time with no changes/improvements between the two sale dates is ideal for this calculation.

Additionally, a review of surrounding municipal trends, via New Hampshire DRA's annual ratio study reports for 3 consecutive years, as well as local Realtor information, can also be used to reconcile an opinion of the current market trend or lack of.

That being said, we did not find significant data that would support a time trend. From 2011 to 2012, the ratio shows that properties appreciated 2%, which over 12 months is not significant enough to support any needed trending.

2011 – 104.3%
2012 – 102.2%

E. Neighborhood Classification

Market Value Influences

The most often repeated quote about real estate relates the three most important factors, "location, location, and location." While humourous, it underlines a significant truth about the nature of property value: it is often factors outside of the property boundaries that establish value.

Most real estate consumers understand the importance of location. A house that is located steps from the ocean likely has more value than a similar one miles away from the waters edge. A retail building close to schools or commuting routes likely has more value than one located far away from these amenities. The stately home located in an area of other similar property likely has more value than a similar one located next to the municipal landfill.

At its very heart, the property tax is a tax on value. Revaluations use mass appraisal that must recognize all factors that influence the value of property, both in a negative and positive direction. Each of these factors may be different in different locations. For this reason, the mass appraisal is indexed to local conditions and uses locally obtained and adjusted information to determine values.

The nature of value influences can affect an entire municipality or region. Entire municipalities may be "close to skiing." Whole counties may be "fantastic commuting locations." Significant areas of our state are quiet country locations. For these reasons, a revaluation may not identify each and every separate factor that influences the value of property. Many of these common elements are assumed to exist for all similar properties in a municipality.

There are value influences that affect entire neighborhoods. These may be as obvious as a location on or near a body of water, ski area, or golf course. They also may be as subtle as a location near a certain park or school, or in a particularly desirable area of the municipality. Whether subtle or obvious, the mass appraisal must account for all of these value influences.

There are also value influences that affect individual properties. These can include such things as water frontage, water access, panoramic views, highway views, proximity to industrial or commercial uses, and heavy traffic counts. These property specific influences may be difficult to isolate, but are critical in the development of accurate values.

The mass appraisal must recognize all value influences: regional; local; neighborhood; and, property. By understanding these factors, accurate market value estimates can be made. Ignoring any of these factors could lead to inaccurate values, and establish a disproportionate system of taxation. Fairness requires that all factors be considered in valuation.

In every community, certain sections, developments and/or locations affect value both positively and negatively in the market. This affect is gaged by the development of neighborhoods. Each neighborhood reflects a 10% value difference positive or negative from the average or most common neighborhood in the community. The most common neighborhood of the community is classified as "E" and each alphabet letter before and after "E" reflects a 10% change in the base or average value. This is market driven, but can generally be equated to the desirability of the road, topography, vegetation and housing quality and maintenance. Attempting to measure this location difference in increments of less than 10% is unrealistic. Once all the neighborhoods are

defined, vacant land sales and improved sales are used to test their existence. Views may not only affect individual properties, they may also impact the entire neighborhood desirability.

As a rule, neighborhoods are first defined by the assessing supervisor based on his/her knowledge and experience considering the above stated factors and then tested and modified by local sales data, as follows:

> First, all the roads in town are driven and the neighborhoods are graded in relation to each other based upon topography, building quality and maintenance, utilities, overall land design and appeal. Using sales data to test our decisions, we also check with local Realtors to confirm our grading of the most desirable and least desirable neighborhoods. Then, we review all the vacant land sales to find the ones that reflect, (as closely as possible) the zoned minimum lot size. In other words, if the zoning in town requires 1-acre and 200 feet of road frontage, we are looking for sales of similar size lots to develop the base undeveloped site value for that zone.
>
> After identifying the base site values for each zone, we then develop a value for excess road frontage and excess acreage above the zone minimum. For example, a 10 acre lot in a 1 acre zone has 9 acres of excess land. The influence that excess road frontage has on value is considered based on market data. Historically, that influence is only measurable when both road frontage and excess land exist to meet zoning for possible further subdivision.

Neighborhoods are classified by alphabetical letters, as follows:

NC					
A	-40%	F	+10%	J	+50%
B	-30%	G	+20%	K	+60%
C	-20%	H	+30%	L	+70%
D	-10%	I	+40%	M	+80%
				Etc.	Etc.

E = Average or most common.

> Q, R, S, T neighborhood designations are reserved for special/unique situations and may or may not follow the 10% steps. See Section 9, Valuation Cost Tables and Adjustments. The "X" designation however, is reserved for rear land, excess acreage designation. When "X" is found on land line 1, it means that the particular lot has no road frontage or known access and is in practical terms landlocked.

Neighborhoods generally designate differences in location across the town based on type of road (dirt, paved, wide, narrow, etc.), condition of land (flat, rolling, steep, wet, etc.) and quality of buildings (high quality, low quality, all similar or mixture, etc.), as well as features like side walks, underground utilities and landscaping of the entire area.

Generally, the value difference from neighborhood to neighborhood is 10% of the average. Each neighborhood is labeled alphabetically with "E" being the average and letters below "E" (D, C, B, A) being less than average and letters after "E" (F - T) being above average.

A - Generally denotes an approved subdivision road not yet developed or maybe just timber cleared.

B - Generally denotes a road cut and stumped and very rough, but passable by 4x4 vehicles.

C - Generally denotes a graded dirt road, either narrow or of poor quality, but passable by most vehicles.

D - Generally denotes poor quality paved roads or good quality dirt roads or less desirable paved road area with poor quality land and/or low quality homes and/or a mixture of quality and style homes.

E - Generally denotes the average neighborhood in town, typically paved Class V town maintained roads. Generally utilities are above ground and sites generally consist of average landscaping.

F - Generally denotes neighborhoods above "F" generally denote areas with similar quality buildings, roads and typically, utilities are underground and sites are more consistently landscaped. Above average neighborhoods are generally more desirable and the factors noted increase marketability. Always remember…location, location, location!

F. Basic Mass Appraisal Process

While the supervisor is analyzing and developing neighborhoods and local values, building data collectors, approved by New Hampshire Department of Revenue Administration (NH DRA) are going parcel by parcel, door to door measuring all buildings and attempting to complete an interior inspection of each principal building to collect the needed physical data, age and condition of the building.

With the land values developed, we now review improved sales, sales that have been developed and improved with buildings or other features, such as well and septic. By deducting the base land value previously established, adjusted the neighborhood and topography, as well as any other features, such as sheds and barns, a building residual value is estimated. After adjusting for grade and condition, we divide by the effective area of each building to arrive at an indicated square foot cost. This is then compared to a cost manual, like Marshall & Swift and/or local contractor information to determine the local building square foot cost.

> *The effective area of a building is computed by considering all areas of all floors and additions of the building and then adjusting each area by its relative cost. If living space is estimated to be $98.00/SF, the basement area of the house is not worth $98.00/SF, but rather some predictable fraction. As such, each section of the building has an* ***actual area*** *and an* ***effective area*** *which is the actual area times a cost adjustment factor. Each assessment property record card shows the actual area, cost factor and effective area of each section/floor of the building. The cost factor adjustments are consistent through the town.*

This is where, using all the previous cost data developed, we begin to extract the value of views and waterfront in the community. Both vary greatly due to personal likes and dislikes of the market, but both have general features that the market clearly values. For waterfront, private access to the water is the most valuable, but even that may be adjusted for size, topography, usefulness of the waterfront, as well as depth in some areas.

The challenge here is to develop a base value for the average or most common waterfront site and then grade each site in relation to the average based on available sales data. If lacking specific sales data, the search may be expanded to include other bodies of water in other towns. Views are a bit more difficult, as they vary widely as does the value that the market places on them. However, the process is much the same. Using sales, we extract a range of value the market places on different views by first accounting for the basic land value and improvements. What value remains is attributed to the view. Views are classified by type; subject matter, closeup versus distant and width of the view. The adjustments for the influence of view are then systematically applied to all other properties in town with views. Also, a view picture catalog is prepared to show the various views.

Once the cost tables are developed, they are used to calculate all values across the municipality. Then the job supervisor and assistant do a parcel by parcel field review to compare what is on each assessment card to what they see in the field and make adjustments to ensure quality and consistency.

G. Assumptions, Theories & Limiting Factors

Assumptions

1. It is assumed that all land can be developed unless obvious wetlands or town documentation stating otherwise. As such, lots smaller than the zone minimum will be considered developable, assuming they are grandfathered.

2. Current use classification is provided by the town and assumed accurate.

3. The use of the property is assumed its highest and best use, unless stated differently on the property record card. Highest and best use analysis was not done for each property.

4. When interior inspections can not be timely made or are refused, the interior data will be estimated based on similar homes, as accurately as possible, assuming good quality finish. If measurements are refused, the building measurement and interior will be estimated from the road.

5. The land acreage and shape are taken from the Town's maps and assumed accurate and name and address data is provided by the town and assumed accurate.

Theories

Local sales data must be the foundation for a good town wide revaluation and guide the Appraiser Supervisor in their conclusions and adjustments to value. However, lacking sales data does not mean a specific feature or property should go unnoticed or not considered and the supervisor must use common sense and their knowledge gained from education and years of experience when making adjustments, both derived directly from the market and those not, but developed over time and with interaction with buyers and sellers and real estate agents.

Cost, while not always directly related to the market, is a very good indicator of market value based on the understanding of the "principle of substitution". This principle states that a person will pay no more and a buyer will accept no less for a property than the cost of a suitable substitution. A suitable substitution can be defined as the cost to build new considering age depreciation and the cost of time. However, actual costs can exceed market value when personal likes come into play or the property is over built for the area. Nothing in assessing, particularly the assessment is straight line or a fact beyond doubt. Assessments are an opinion of the most probable value a property is worth at a stated point in time given normal market exposure, it is not a fact!

Limiting Factors

The scope of services outlined in the contract spells out the services rendered, which in itself identifies limiting factors. In mass appraisal work, limiting factors or conditions generally include the number of sales available and the accuracy of the data used. Data accuracy is limited by the fact that interior inspections are not available to all properties and, in some cases, when data is supplied by third parties.

H. Telecommunications & Utilities Valuation

1. Telecommunication

Assumptions – If data is not provided by property owner, a), b) & c) will be in affect

a.) DOT miles of road to be accurate and include all roads.
b.) Average distance between poles 250 feet.
c.) Width of right-of-way to be 10 feet.
d.) Average pole length 40 feet.
e.) 50% assumed joint ownership/owned by electric company.
f.) Assumed 60% good.
g.) Above average to be used if no data or incomplete data is provided by the owner.

Methodology

Miles x 5,280 ÷ 250 = # of poles.

# of Poles x $900 replacement value cross members x installation @ 50% ownership. No underground conduit estimated, but if data and value were provided, it was used.

R/W acres = miles x 5,280 x 10 feet wide ÷ 45,560 = acres of public right-of-way.

If your town had multiple telephone companies, this value was allocated to each based on the estimated coverage of the town.

Costs

$900/pole from Avitar files based on reported actual costs for replacement of 40 foot poles and cross members from PSNH and NHEC.

Average 40 foot Pole Cost	$680
Average Cross Member & Support	120
Average Installation	100
	$900

R/W cross town/country easement valued for all utilities at $3,000/acre, somewhat higher than local raw land values, as it is cleared. Telecommunication use of the public R/W has a similar value in our opinion but has great access and ease of maintenance and thereby more valuable. We estimated $5,250/acre but then adjusted based on the average number of customers/mile for each town to account for economic market value.

2. Utilities

Assumptions

a) Report of inventory provided by each utility is accurate.
b) If no original year in service provided, an estimate will be made.

Methodology – Replacement Cost New Less Depreciation

The nationally recognized Whitman, Requardt & Associates, LLP Handy-Whitman Index of Public Utilities Construction Costs manual will be used to trend original costs forward to the present year or the valuation base year for the municipality. As an example:

Towers – Reported Original Cost $150,000 Year in Service 1984

1984 Index = 233

2009 Base Year Index = 553

150,000 ÷ 233 = 64,377.68 x 553 = $356,008.57 Replacement Cost

This replacement cost must then be depreciated for age.

If that depreciation were 59%, the value would be $146,854

The accuracy or value of any cost approach to value is the depreciation developed for each item, as well as the remaining economic life allowed to each item that has passed its life expectancy but still in service. As such, Avitar's unique depreciation, developed over time, is proprietary. Incorporated in our depreciation is an economic market adjustment based on the average customer/mile for each town. This reflects the adjustment of actual cost for a utility that would not normally be built if left to market forces only, as well as the upward adjustment to the cost of a utility in a dense area with high customer/mile rate, reflecting a higher market value. However, a summary report for each individual utility is provided herein.

In the case of a public utility not willing or unable to provide an inventory, the NH DRA value for that utility was used, adjusted by a ratio that is developed by comparing all other utilities across the state valued by Avitar to the NH DRA value. This ratio maintains equity among utilities that provide information and those that didn't or couldn't.

See following pages for utility reports.

AVITAR ASSOCIATES OF NEW ENGLAND INC.

Utility Valuation Report Listing

(Using Handy Whitman Cost Index Manual -- North Atlantic Section)

UTILITY NAME: AUBURN - PSNH UTILITY VALUATION YEAR: 2013

Description	Original Cost	Replacement Cost	Depreciation	Assessment Value
E355 TRANS, POLES & FIXTURES	$ 16,228	$ 136,755	% 0.850002	$ 20,513
E356 TRANS, OVER CONDUCT & DE	$ 52,896	$ 151,081	% 0.647950	$ 53,188
E364 DISTR, POLES,TOWERS & FXT	$ 1,313,300	$ 2,791,650	% 0.556708	$ 1,237,517
E365 DISTR, OVER CONDUCT & DEV	$ 1,097,916	$ 2,987,732	% 0.580040	$ 1,254,728
E366 DISTR, UNDERGRND CONDUIT	$ 94,478	$ 163,378	% 0.423086	$ 94,255
E367 DISTR, UNDER COND & DEVIC	$ 1,336,498	$ 3,149,015	% 0.456529	$ 1,711,398
E368 DISTR, PAD TRANSFORMERS	$ 925,584	$ 925,584	% 0.100000	$ 833,026
E369 DISTR, SERVICES OVER&UND	$ 868,851	$ 1,591,556	% 0.404685	$ 947,477
E370 DISTR, METERS INSTALLED	$ 279,309	$ 279,309	% 0.100000	$ 251,378
E373 DISTR, STR LIGHTS OVERHD	$ 98,635	$ 221,174	% 0.502500	$ 110,034
E400 UNCLASSIFIED CONSTRUCTIO	$ 758,411	$ 758,411	% 0.000000	$ 758,411
GRAND TOTALS FOR AUBURN - PSNH:	$ 6,842,106	$ 13,155,645		$ 7,271,900 *

* Value Rounded To Nearest Hundred

AVITAR ASSOCIATES OF NEW ENGLAND INC.

Utility Valuation Report Listing

(Using Handy Whitman Cost Index Manual -- North Atlantic Section)

UTILITY NAME: AUBURN - NHEC UTILITY VALUATION YEAR: 2013

Description	Original Cost	Replacement Cost	Depreciation	Assessment Value
E364 DISTR, POLES,TOWERS & FXT	$ 110,941	$ 193,841	% 0.444008	$ 107,774
E365 DISTR, OVER CONDUCT & DEV	$ 154,558	$ 369,421	% 0.493580	$ 187,082
E367 DISTR, UNDER COND & DEVIC	$ 44,475	$ 48,909	% 0.138707	$ 42,125
E368 DISTR, PAD TRANSFORMERS	$ 48,219	$ 118,668	% 0.506354	$ 58,580
E369 DISTR, SERVICES OVER&UND	$ 39,054	$ 88,369	% 0.506343	$ 43,624
E370 DISTR, METERS INSTALLED	$ 13,178	$ 22,825	% 0.619715	$ 8,680
GRAND TOTALS FOR AUBURN - NHEC:	$ 410,425	$ 842,033		$ 447,900 *

* Value Rounded To Nearest Hundred

SECTION 4

CAMA SYSTEM

A. INTRODUCTION TO THE AVITAR CAMA SYSTEM

A. INTRODUCTION TO THE AVITAR CAMA SYSTEM

THE POINT SYSTEM—An Industry Standard

The point system for mass appraising is an industry standard developed many years ago and represents the best cost valuation system modified by the local market available and used (in some form or another) by most, if not all, Computer Assisted Mass Appraisal (CAMA) appraisal systems available on the market.

Avitar's CAMA system uses the point system. However, ever since 1986 we have made many very important refinements to increase accuracy, equity, reliability and consistency. We have also provided a menu driven system for ease of use.

Very simply, the system works by dividing up the building into components which consistently represent a certain predictable percent of the total value. These construction components are then assigned point values which represent its contribution to the total value and accounts for the cost and market appeal of the item.

POINTS

Points are based on the associated cost to the total building in relation to other options for similar features. The exterior wall factors also include the structural frame. These point values are based on the percentage that the actual cost historically represents to the total cost and provides a consistent, predictable and equitable approach to mass appraisal building values.

Each building is first measured and sketched showing the actual footprint of the building and various story heights. Then the following attributes are listed:

Roof Style & Cover	Example – Gable or Hip/Asphalt
Exterior Wall	Example – Clapboard/Vinyl (Up to Two Different Exteriors can be listed, using the two most predominant)
Interior Wall	Example – Plaster/Wood (Up to Two Different Interiors can be listed, using the two most predominant)
Floor Cover	Example – Pine/Softwood & Carpet (Up to Two Different Floor Covers can be listed, using the two most predominant)
# of Bedrooms	
# of Bathrooms	
Fixtures	
Extra Kitchen	
Central Air	
Generator	
Fireplaces	
Heat	Example – Oil/FA Ducted (This is an oil fired furnace with forced air ducted system)

Quality	Example – A4 Exc (Here A=average, A1 is one grade better and A4 is 4 graders better
Com. Wall	Example – Commercial Wall Frame Construction Use for commercial buildings to account for various structures.
Size Adjustment	Size adjustment is the factor that accounts for the economy of scale theory which means the more of anything you purchase at one time, the lower the unit cost. As such, a larger home will have a factor less than 1.00, while a smaller home will have a factor greater than 1.00 to account for per square foot cost variation.
Base Rate	This is the gross base square foot cost that this building, as well as all other similar buildings will start at.
Bldg. Rate	Building Rate – After consideration of all building materials and quality of construction, a building rate is developed which can be greater and lower and 1.00 based on material, quality, and size.
Com. Wall Factor	In the case of a commercial property an added factor may be needed to account for various commercial structural frames.
Adjusted Base Rate	Base rate times building rate times commercial wall factor = the unique adjusted base for this structure. Therefore, two identical homes with slightly different square feet will have slightly different adjusted base rates as the economy of scale will come into play. Also, two identical size and style homes with various exterior wall materials may also vary in adjusted base rates slightly to account for the various market appeal/desirability and value of each material. The Adjusted Base Rate is then multiplied by the total effective area of the house to develop a replacement cost new for that structure.

Bedroom & Bathroom Data

While the number of bedrooms is a valuable commodity for most homes, the accompanying number of bathrooms or fixtures plays a pivotal role. A house with 5 bedrooms and only 1 bathroom is functionally obsolete as the plumbing cannot equally handle the bedrooms, as such a similar house with 5 bedrooms and 2 bathrooms would command a higher market value, all other things equal. As such, a weighting system was developed by Avitar to weight the number of bedrooms to bathrooms to develop an adjusting factor to account for this obsolescence when it existed. Therefore, it is not solely the bedroom or bathroom count that effects value, but the combination of both.

EFFECTIVE AREA CALCULATIONS

The calculation of effective area is applied in order to adjust for the differences in square foot construction costs in the various subareas of the building as compared to the principal living area. The SUB-AREA ID table shows the effective area which is the actual area adjusted by the cost factors for each subarea. Cost factors for all subareas for this community can be found in the Local Tables Section of this manual. (Section 9)

EXAMPLE: BUILDING AREA CALCULATIONS

SUB AREA IDS			ACTUAL AREAS	COST FACTOR ADJUSTMENT	EFFECTIVE AREA
FFF	(First Floor Finished)	=	864	1.00	864
UFF	(Upper Floor Finished)	=	864	1.00	864
GAR	(Attached Garage)	=	600	.45	270
EPF	(Enclosed Porch Finished)	=	192	.70	134
DEK	(Deck or Entrance)	=	192	.10	19
BMU	(Basement Unfinished)	=	864	.15	130
	TOTAL AREAS GROSS	**=**	**3,576**	**EFFECTIVE =**	**2,281**

The cost factor adjusts the square foot cost of construction for living area to other areas of the structure.

EXAMPLE:

If the base rate is $85 for a residential house, the cost of a deck is not $85/square foot, it is more accurately expressed as only 10% or $8.50/square foot. As such, this 192 square foot deck can be valued as follows: 192 square feet x 10% = 19.2 sf x $85 base rate = $1,632 or $85 x 10% = $8.50 x 192 square feet = $1,632.

STORY HEIGHT ADJUSTMENTS

Further refinement of the base rate is required to acknowledge the impact of multi-story construction on the total construction costs. This is accomplished through the use of the story height adjustment factor. It is cost adjusted to account for the fact that up until 3 stories or more, it is generally less expensive during original construction to add square feet via story height then expanding the footprint which involves site work and foundation work.

STANDARD AGE/CONDITION DEPRECIATION CHART

	BUILDING AGE CONDITION CLASSIFICATIONS						
AGE	V. POOR	POOR	FAIR	AVERAGE	GOOD	V. GOOD	EXCELLENT
1	5	4	3	1	1	1	1
5	11	9	7	5	4	3	2
10	16	13	9	8	6	5	3
15	19	15	12	10	8	6	4
20	22	18	13	11	9	7	4
30	27	22	16	14	11	8	5
40	32	25	19	16	13	9	6
50	35	28	21	18	14	11	7
60	39	31	23	19	15	12	8
70	42	33	25	21	17	13	8
80	45	36	27	22	18	13	9
90	47	38	28	24	19	14	9
100	50	40	30	25	20	15	10
125	56	45	34	28	22	17	11
150	61	49	37	31	24	18	12
175	66	53	40	33	26	20	13
200	71	57	42	35	28	21	14
225	75	60	45	38	30	23	15
250	79	63	47	40	32	24	16
275	83	66	50	41	33	25	17
300	87	69	52	43	35	26	17

The supervisor then can add for added physical, functional or economic reasons or conditions over and above normal age as noted above.

This standard age depreciation can be further adjusted based on the depreciated rate of various buildings. A residential building is typically 1%, while manufactured housing might be 3%. As such, a good 10 year old house would have 6% depreciation, while similar manufactured homes would have 18%. See Base Rate Codes & Value Chart for unique depreciation by building type.

DEPRECIATION TYPES & USE

NORMAL AGE DEPRECIATION is based on the age of the structure and the condition relative to that age. New homes, while new, are average for their age, while older homes may be in better condition relative to their age.

EXAMPLE - 200 Year Old House

Condition	Normal Age Depreciation is
Very Poor	71%
Poor	57%(See chart on
Fair	42%prior page)
Average	35%
Good	**28%**
Excellent	14%

EXAMPLE - For the 200 year old home in good condition

Building Value	=	129,900
Depreciation	=	x 28%
Depreciation Value	=	- 36,372
Depreciated Bldg. Value =		**93,528**

- OR -

Building Value	=	129,900
% Condition Good	=	x 72%
Depreciated Bldg. Value =		**93,528**

All final values are rounded to the nearest 100 dollars for land and buildings alike.

Therefore, the indicated building value = $93,500

PHYSICAL: Refers to the general condition of the building, or how well it has aged or been maintained in comparison to new buildings. Here is where the assessor can allow for an adjustment for items that are not consistent with the overall condition of the majority of the home.

FUNCTIONAL: Refers to the functional design of the building based on the current use, design, layout and new technology available, over and above the normal age depreciation.

ECONOMIC: Refers to depreciation caused by things which are exterior to the building and usually not controllable by the owner. Excessive traffic, active railroad track, airport nearby, are a few examples.

TEMPORARY: Refers to depreciation given for a special reason which shall only exist for a short period of time. Generally used for new construction to account for varying stages during the construction, as of April 1st in the assessing year.

LAND VALUE COMPUTATIONS

Land can be valued using a per square foot method, per acre method, per front foot method, or a combination of all three methods. Generally, we use acres as our unit of measure for the lot, dollar per acre pricing for the rear acreage and dollar per front foot to take into account additional lot value by way of potential subdivision. Water frontage and/or view contributory value is listed separately. Land charts are created for ease of use.

SAMPLE LAND CHART

# Acres	Value
2	31,000
1.45	27,500
1	23,000
0.79	16,000
0.45	13,000
0.21	9,000
0.01	500

Excess acreage at $1,500 per acre

Base View Value = $50,000
Base Waterfront = $100,000

A table, as shown above, exists for each zone in town, showing base values for separate indicated lot sizes in town.

This value would then be further adjusted by the neighborhood factor, as indicated by the neighborhood code (NC) table. The NC was established during the revaluation/update program when each road, on every map that existed at that time, had a NC assigned to it based on road; land quality, topography and market desirability.

For this example, we will assume a .45 acre lot with a NC of "G" (which has a value of 1.20, meaning this neighborhood is 20% more desirable or valuable than the average).

$13,000 x 1.20 = $15,600

The land may further be adjusted by the appraiser for unique situations for the quality and development of the site, driveway and topography with individual condition adjustments noted on the card and multiplying straight across. In addition, the assessor can include an overall additional condition for abnormal conditions such as shape, in addition to the site, driveway and topography by placing a factor from 1 to 999 in the condition field on the appraisal card. The appraiser can then positively or negatively adjust the land value.

$15,600 x 1.10 Site x 1.00 Driveway x 1.00 Topography x
.90 Condition (Wet) = $15,444 or $15,400 (rounded)

If there were any excess land over the zone minimum, this land would be priced at the excess acreage price. There would be no NC adjustment, for the NC indicates the street frontage and excess land is the same throughout the town. It would be depreciated for size from the excess acreage chart created for this town, which simply decreases the per acre rate based on quantity. This excess land may be further adjusted based on the appraiser's knowledge of the area for topography, ledge, wetlands, etc.

Excess road frontage, in amounts equal to the zone minimum, would be valued <u>only if there is enough excess land to support subdivisions based on the zoning requirements</u>. Excess frontage would not normally be assessed unless subdivision potential exists, however it could be if the market sales data showed a value exists even if subdivision potential did not.

The frontage would be valued by multiplying only the excess frontage above the minimum requirement, in increments of the zone minimum by the front foot rate and then adjusted by the NC and further for usability, topography, wetland, etc.

Example:

Zone = Two Acres, 100 Front Feet

1. Parcel with three acres and 400 front feet would not have any excess frontage assessed because only one excess acre exists and the zone requires two. So, this parcel has no subdivision potential.

2. Parcel with four acres and 400 front feet would be assessed for 100 excess front feet because there are two excess acres to support the zoning requirement, and therefore, a potential for subdivision exist.

If the sales data were to show a value for excess road frontage, even if no subdivision potential existed, it could be valued based on every front foot beyond the zone minimum.

Finally, you would add the building value to the extra features value to the land value to get the total assessment.

SECTION 5

CAMA APPRAISAL REVIEW CARD

ABBREVIATIONS, SAMPLES & DEFINITIONS

Notices may not be exact copies

APPRAISAL CARD - FRONT SIDE

Map: 000001 Lot: 000108 Sub: 000000 Card: 1 of 1 361 MAIN STREET ANYTOWN Printed: 07/23/2012

OWNER INFORMATION

DOW, JOHN

361 MAIN STREET

ANYTOWN, NH 03123

SALES HISTORY

Date	Book	Page	Type	Price	Grantor

PICTURE

LISTING HISTORY

12/14/11	INSP	MARKED FOR INSPECTION

NOTES

DIRT BSMT; STANDBY GENERATOR;

EXTRA FEATURES VALUATION

Feature Type	Units	Length x Width	Size Adj	Rate	Cond	Market Value	Notes
FIREPLACE 1-STAND	2		100	3,000.00	100	6,000	
						6,000	

SAMPLE APPRAISAL CARD

MUNICIPAL SOFTWARE BY AVITAR

ANYTOWN ASSESSING OFFICE

PARCEL TOTAL TAXABLE VALUE

Year	Building	Features	Land
2010	$ 215,400	$ 6,000	$ 41,264
		Parcel Total: $ 262,664	
2011	$ 215,400	$ 6,000	$ 41,235
		Parcel Total: $ 262,635	
2012	**$ 215,400**	**$ 6,000**	**$ 40,901**
		Parcel Total: $ 262,301	

LAND VALUATION

Zone: RES RESIDENTIAL Minimum Acreage: 2.00 Minimum Frontage: 200 Site: AVERAGE Driveway: GRAVEL Road: GRAVEL

Land Type	Units	Base Rate	NC	Adj	Site	Road	DWay	Topography	Cond	Ad Valorem	SPI	R	Tax Value	Notes
1F RES	1.000 ac	38,000	E	100	100	100	99	100 – MILD	100	37,600	0	N	37,600	
UNMNGD PINE	17.700 ac	x 1,400	X	91				98 – ROLLING	100	22,100	100	N	3,301	
UNMNGD PINE	400.000 ff	x 25	E	100					90	9,000	0	N	0	TOPO
	18.700 ac									68,700			40,901	

As you can see, the appraisal card is broken into sections.

1) **MAP/LOT/SUB** - Numbers represent the parcel identification numbers (PID) used by the town. The map number represents the ID of the map sheet on which the parcel is displayed. The lot number and sub lot are the unique ID for the parcel on that map sheet.

2) **CARD # OF #** - Typically 1 of 1 means the parcel has only one assessment record card for its entire assessment information. In a multi-card situation, where more than one assessment record card is needed to show the assessment information of a parcel with several primary buildings, the first number is the sequential card number and the second number is the total number of cards for that parcel.

3) **PRINTED** - The date the card was printed, reflecting the assessment information and value on file at that time.

4) **OWNER INFORMATION** - Located in upper left hand corner just below map-lot-sublot numbers and contains the owner name and address information of record at the time of print.

5) **SALE HISTORY** - This section is located to the right of owner information box and displays the five most current sales recorded as known for this parcel showing book, page, date, type of sale (Qualified/Unqualified & Vacant/Improved) and seller's name.

6) **LISTING HISTORY** - This section usually contains the date that the property was visited, plus the two initials of the person who visited the property. The third character is the reason why they were there, and the fourth is the "action" taken. This may vary as it is user definable, but will always have a date followed by a four space code and then space for a brief note.

7) **NOTES** - An area for the appraiser to enter abbreviated notes about the property, as well as reasons for any adjustments made elsewhere on the assessment record card.

8) **PICTURE** - Intended to represent some aspect of this tract of land such as view, waterfront or site or outbuildings.

9) **EXTRA FEATURES VALUATION** - This area contains the valuation of fireplaces, pools, sheds, detached garages, etc., (a table listing all descriptions and rates can be found in Section 9), and displays a description (as well as dimensions when appropriate), the unit rate, condition and final value. The grand total is rounded to nearest $100. Also included, is a brief notes section for each extra feature item listed.

10) **PARCEL TOTAL TAXABLE VALUE** - Is located about half way down the right side of the card and displays prior years and current assessed value summarized as buildings, features and land and then the card total value. In the case of a multi-card parcel, in the current year column an additional value will be displayed for the total parcel value just below the card total value, whereas the prior year values will only show the total assessed value of the entire parcel.

11) **LAND VALUATION** - This area provides all the information necessary for land valuation.

Zone - Displays the land pricing table description, which is usually the same as the zones in town.

Minimum Acreage - The minimum lot size as defined by zoning requirements of the town. Occasionally, zones are defined that do not relate to the town zoning. Refer to the land pricing table for clearer definition of the land pricing table which is usually that zone town minimum size requirement.

Minimum Frontage - Same as above, but represents the minimum required road frontage needed for development.

Site - A brief description of the site such as undeveloped, fair, average, good, very good or excellent referring to the condition of the site development and landscaping.

Driveway - A brief description of the driveway such as none, gravel, paved, stone, etc.

Road - A brief description of the road such as paved or gravel.

Land Type - Refers to specific codes used to classify land use. These are all listed and defined in Section 9.

Units - Size of land being assessed on each line.

AC	=	Acres
FF	=	Front Feet (Road Frontage)
WF	=	Waterfront Feet
VU	=	View
SF	=	Square Feet

Base Rate - Dollar value per unit, except on line one where it is the basic value of the building site, if one exists, for the lot size shown under units.

NC - Neighborhood Code. All towns have distinct neighborhoods, some more than others, which influence value based on features of the neighborhood and market desirability. Neighborhoods are represented alphabetically with "E" being average; A, B, C & D being levels below average; and F, G, H, I, etc. being levels above average value and desirability.

ADJ - The factor by which the neighborhood influences the value. In the case of excess acreage, it is a quantity or size adjustment factor

Site - Land line one only and displays the adjustment factor, if any, associated with the description.

Road - A brief description of the road such as paved or gravel.

Dway - Land line one only and displays the adjustment factor, if any, associated with the description.

Topography - Each land line can have a topography description and adjustment associated and displayed with it.

Cond - Condition - area to enter other land adjustments, such as: wet, shape, undeveloped, etc.

Ad Valorem - Market value.

SPI - Soil Potential Index is used to regulate the per acre rate of the current use land based on the range of value provided by the state. An entry of 100 means the maximum value and 0 means the minimum. The SPI is provided by the landowner for farm land.

R - This is used for the current use recreation discount. If the recreation discount is granted, a "Y" will appear in this column.

Tax Value - Is the taxable value of all land being appraised, including the land assessed under current use.

Notes - Brief information about each land line or the "COND" adjustment.

APPRAISAL CARD - BACK SIDE

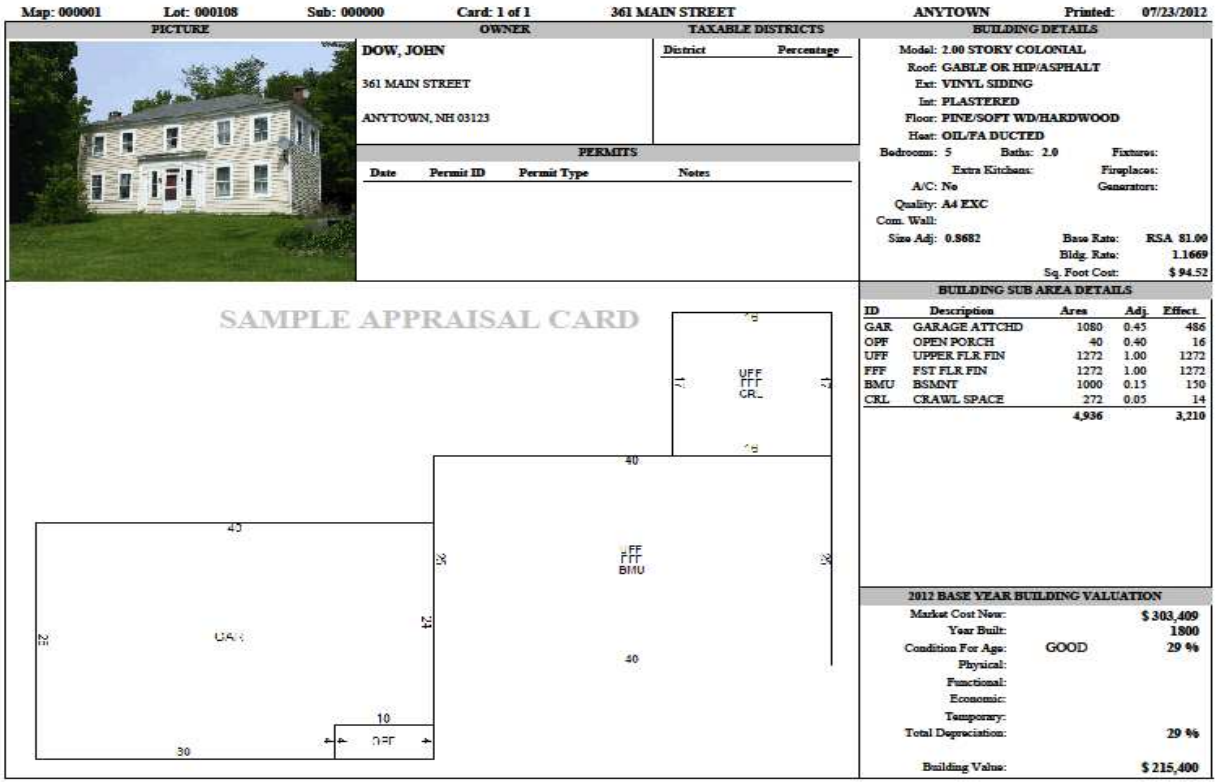

Map: 000001 Lot: 000108 Sub: 000000 Card: 1 of 1 361 MAIN STREET ANYTOWN Printed: 07/23/2012

PICTURE

OWNER

DOW, JOHN

361 MAIN STREET

ANYTOWN, NH 03123

TAXABLE DISTRICTS

District	Percentage

PERMITS

Date	Permit ID	Permit Type	Notes

BUILDING DETAILS

Model: 2.00 STORY COLONIAL
Roof: GABLE OR HIP/ASPHALT
Ext: VINYL SIDING
Int: PLASTERED
Floor: PINE/SOFT WD/HARDWOOD
Heat: OIL/FA DUCTED
Bedrooms: 5 Baths: 2.0 Fixtures:
Extra Kitchens: Fireplaces:
A/C: No Generators:
Quality: A4 EXC
Com. Wall:
Size Adj: 0.8682 Base Rate: RSA 81.00
Bldg. Rate: 1.1669
Sq. Foot Cost: $ 94.52

BUILDING SUB AREA DETAILS

ID	Description	Area	Adj.	Effect.
GAR	GARAGE ATTCHD	1080	0.45	486
OPF	OPEN PORCH	40	0.40	16
UFF	UPPER FLR FIN	1272	1.00	1272
FFF	FST FLR FIN	1272	1.00	1272
BMU	BSMNT	1000	0.15	150
CRL	CRAWL SPACE	272	0.05	14
		4,936		3,210

2012 BASE YEAR BUILDING VALUATION

Market Cost New: $ 303,409
Year Built: 1800
Condition For Age: GOOD 29 %
Physical:
Functional:
Economic:
Temporary:
Total Depreciation: 29 %
Building Value: $ 215,400

---

1) **PICTURE** - A color or black and white digital picture, if one is attached, usually a picture of the sketched building.

2) **OWNER INFORMATION** - Repeats the owner information from the front for ease of use.

3) **TAXABLE DISTRICTS** - This area lists any town districts and the percentage of the property in each district.

4) **BUILDING DETAILS** - The title bar displays the story height, building style and year built.

Model – Story Height/Building Type
Roof - Style & Material Cover
Ext - Exterior Wall Cover
Int - Interior Wall Material
Floor - Floor Cover Material
Heat - Type & Fuel
Bedrooms - # of Bedrooms
Bath - # of Baths

Fixtures - Total # of Bath Fixtures
Extra Kitchens – In-law or Living Area Kitchen

Fireplaces -
A/C - Central Air
Generators -
Quality - Building Quality Description
Com Wall - Commercial Wall Structure
Size Adj - Size Adj Factor
Base Rate - Bldg Sq Ft Cost
Bldg Rate - Overall bldg factor, based on prior bldg description
Sq. Foot Cost - Final Adjusted Bld Sq Ft Cost

5) **PERMITS** - Area to keep track of issued building permits, manually or automatically from the Avitar Building Permit module, if town building inspector is using that module.

6) **BUILDING SKETCH** - It is the area in which the CAMA generated sketch can be found. Labeling of all sections is located within each area. The acronyms in the sketch, which consists of three letters, are shown to the right of the sketch in the Building Sub Area Details section in a more readable, but still in an abbreviated format.

7) **BUILDING SUB AREA DETAILS** - This shows the Sub Area ID and description, the actual area for each sub area, the cost factor associated with it as a percentage of the Building Square Foot Cost and the effective area, which is the actual area time the cost factor.

Example: A first floor finished (FFF) might be worth $86/sq ft, but an attached deck would not be. By using the 10% cost factor, the square foot cost of the deck would be $8.60. So, if you have a 100 square foot deck at $8.60/sf, it would be valued at $860. Put another way, 100 sf times cost adjustment factor of 10% = 10 sf. 10 sf * $86 base rate = $860. As you can see, using the adjustment this way is the same, but it enables the computation of the total effective area for use in the overall size adjustment computation and for comparing the effective area of comparable structures.

8) **BASE YEAR BUILDING VALUATION** - Is calculated by multiplying the total effective area by the Building Adjusted Base Rate, displayed just above and to the right of the sketch. This represents the undepreciated value of the structure, or rather the cost to replace the structure with a similar structure at the time the assessment was made, based on the local market data. The base year is the year of the last valuation update and the year from which the age depreciation of the building is computed.

- Normal - Deprecation based on the age and condition of the building.
- Physical - Is added depreciation to account for the loss in value due to wear and tear and the forces of nature.
- Functional - Added depreciation is the loss in value due to inability of the structure to perform adequately the function for which it is used, based on problems with design, layout and/or use of the buildings.
- Economic - Added depreciation based on factors influencing value that are external to the property and generally not controlled by the owner.
- Temporary - Generally used for a building in a transitional phase such as renovation, remodeling or new construction, not completed as of April 1st. It is expected to change yearly as construction is completed.

This approach ensures consistent age depreciation, but also allows the supervisor to make individual added depreciation on final field review, as deemed needed for each property. See Section 4 - Depreciation - Manual Calculation

- Total Dpr - Total all depreciation.
- Assessment is the actual assessed value of the building and is calculated by multiplying the Building Market Cost New value by (100% - Total Depreciation %).

Building Market Cost New =$227,000
Total Depreciation = 21% x .79 (100% - 21%=79% or .79)
$179,330
Rounded to $179,300 = Building Assessment

GENERAL
COMMONLY USED ABBREVIATIONS

A/C	Air Conditioning
AC	Acres
ACC	Access
AMNTY	Amenity
ATT	Attached
AVG	Average
BC	Blind Curve
BCH	Beach
BKL	Backland
BR	Bedroom
BSMNT/BMT	Basement
BTH	Bath
CB	Cinder/Concrete Block
CE	Conservation Easement
CK/CHK	Check
CLR	Clear
COF	Comm Office Area
COND	Condition
CTD	Cost to Develop
CTR	Close to Road
CU	Current Use
CW	Common Wall
DB	Dirt Basement
DNPU	Did Not Pick UP
DNV	Did Not View
DNVI	Did Not View Interior
DTW	Distance to Waterfront
DV	Data Verification
DW	Driveway
ENT	Entrance
ESMNT	Easement
EST	Estimate
EXC	Excellent
EXT	Exterior
FF	Front Feet on Road
FIN	Finished
FLR	Floor
FND	Foundation
FP	Flood Plain
FPL	Fireplace
FR	Fair
FS	Field Stone
GAR	Garage
GD	Good
HO	Homeowner
INCL	Included
INFO	Information
INT	Interior
LB	Low Basement
LDK	Loading Dock
LLA	Lot Line Adjustment
LTD	Limited
LOC	Location
LUCT	Land Use Change Tax
ME	Measured & Estimated
MH	Manufactured Home
MHD	Manufactured Home-Double Wide
MHS	Manufactured Home-Single Wide
MKB	Modern Kitchen/Bath
M/L	Measured & Listed
MPU	Most Probable Use
NBD	Non-Buildable
NC	No Change
NICU	Not in Current Use
NOH	No One Home
NV	No Value
OKB	Outdated Kitchen/Bath
P&B	Post & Beam
PDS	Pull Down Stairs/Attic Stairs
PF	Pond Frontage
PLE	Power Line Easement
PR	Poor
PRS	Pier Foundation
PU	Pickup
RBL	Road Bisects Lot
RD	Road
REF	Refused
RF	River Frontage
ROW	Right of Way (R/W)
SHDW	Shared Driveway
SUBD	Subdivision
TOPO	Topography
UC	Under Construction
UNB	Unbuildable
UND	Undeveloped
UNF	Unfinished
VBO	Verified by Owner
VGD	Very Good
VPR	Very Poor
VU	View
WA	Water Access
WB	Wet Basement
WF	Water Frontage
WH	Wall Height
WOB	Walkout Basement
W&D	Windows & Door
XFOB	Extra Features
XSWF	Excess Water Frontage
YB	Year Built

LIST LETTER SAMPLE

Town of Anytown
Board of Selectmen
P.O. Box 123
Anytown, NH 03000

SMITH, JOHN & MELISSA
1 SMITH ROAD
ANYTOWN, NH 03000

Map Lot Sub : 000042 000002 000088

August 21, 2013

Dear Property Owner:

The Town of Anytown has contracted Avitar Associates of New England, Inc. to perform a data verification process. Annually, properties are chosen and the data is verified for accuracy. This process helps to maintain an accurate database, which when needed, will help maintain fair and equitable assessments.

At this time, Avitar is scheduling appointments for interior inspections. The purpose of the interior inspection is to verify the data listed on your property record card for accuracy ie. number of bedrooms and baths and to determine the overall condition. Please call during the times specified below to set up a specific appointment (at a later date) to view the interior of your property. Also, please note this phone will only be answered during the specified dates and times.

Please call **603-555-5555 STARTING Mon 11/28/13 thru Wed 11/30/13 between 8:30 am & 4:00 pm** to arrange an appointment in the near future for an interior inspection of your property. Please have this notice available when you call.

Please keep in mind that the inspection of your property is very important for an accurate and equitable assessment.

Thank you for your cooperation,
Avitar Associates of NE, Inc.
Contract Assessors for the Town

P.S. It is important to note the phone may be busy during the first day of calls, as such, please be patient when calling.

SAMPLE NOTICE OF PRELIMINARY ASSESSMENT VALUE

Town of Anytown
Board of Selectmen
P.O. Box 725
Anytown, NH 03447

DOW, JOHN
PO BOX 350
ANYTOWN, NH 03000

Map Lot Sub : 000015 000029 000000

NOTICE OF PRELIMINARY ASSESSMENT VALUES

June 11, 2013

Dear Property Owner:

The Town of Anytown has contracted with Avitar Associates to perform a townwide update of values. The new assessed values established for your property during the recent update are listed below. To view your property record card online, go to Avitar's Website at www.avitarassociates.com, click ONLINE DATA, then click LOGON. The **User ID is Anytown & the Password is anytown**. Access to the website will be for the next 30 days from the date of this notice. During this period of time, your prior assessment data will only be available at the Fitzwilliam Town Office. If you do not have access to the internet, listings of all assessments are available for review at the Town Office. Internet access may also be available at the Library during normal business hours.

Should you feel an error exists or should you like to make an appointment to review your assessment, you should call **603-XXX-XXXX starting on Mon 6/25/13 thru Thur 6/28/13 from 8:30 am to 4:00 pm** to arrange an appointment. Reviews will be held BY APPOINTMENT ONLY at the Fitzwilliam Town Office at a later date. Please keep in mind the phone number will only be answered during the times listed above. If you cannot call during this time frame, please put your specific concerns in writing and we will review them. Do not attempt to fax a request for appointment during or after the date above.

If you call for an appointment to review your assessment, please be patient trying to reach our scheduler. Invariably, the phone line is very busy in the first hours of scheduling, so please be prepared to call back later during the scheduling period.

Please note that you should not multiply your new assessment by the old tax rate, as it will produce an erroneous tax amount. **The newly established values will not be implemented until the December bill.**

Thank you for your cooperation.

Land Value: $ 219,300 Other Value: $ 1,432,600 Total Parcel Value: $ 1,651,900

SAMPLE SECOND NOTICE OF VALUE
AFTER PRELIMINARY HEARINGS

Town of Anytown Assessing Office
P.O. Box 123
Anytown, NH 03000

SMITH, JOHN & MELISSA
1 SMITH ROAD
ANYTOWN, NH 03000

Map Lot Sub : 000110 000004 000000

September 30, 2013

Dear Property Owner:

The value listed below is your final value developed from the recent townwide update after review and changes from the informal hearing process in **Anytown, N.H.**

Changes may have occurred whether or not you scheduled an appointment for an informal hearing.

If you have any further questions or concerns, they should be addressed through the abatement process once you have received your final tax bill in the fall.

Please note that you should not multiply your new assessment by the old tax rate, as it will produce an erroneous tax amount.

Sincerely,
Avitar Associates of NE, Inc.
Contract Assessor

Land Value: $ 72,300 Other Value: $ 74,400 Total Parcel Value: $ 146,700

DEFINITIONS

Abatement: (1) An official reduction or elimination of one's taxes.

Abstraction Method: Method of land valuation in the absence of vacant land sales, whereby improvement values obtained from the cost model are subtracted from sales prices of improved parcels to yield residual land value estimates. Also called land residual technique.

Ad Valorem Tax: A tax levied in proportion to the value of the thing(s) being taxed. Exclusive of exemptions, use-value assessment provisions, and the like, the property tax is an ad valorem tax.

Age/Life Method (Depreciation): A method of estimating accrued depreciation founded on the premise that, in the aggregate, a neat mathematical function can be used to infer accrued depreciation from the age of a property and its economic life. Another term is "straight-line depreciation" (see depreciation, accrued; and depreciation method, straight-line).

Allocation Method: A method used to value land, in the absence of vacant land sales, by using a typical ratio of land to improvement value. Also called land ratio method.

Amenity: A feature of an improvement that enhances its suitability for its basic use. A fireplace in a single-family residence is an amenity, as is covered parking at an apartment complex. By definition, amenities always increase value. Use of land owned in common like in a condominium complex, is an added value or amenity.

Anticipated Use Method: A method used to appraise underdeveloped land. Expected improvements to the land are specified, and total development costs are estimated and subtracted from the projected selling price to give an estimate of the value of the undeveloped land.

Appeal: A process in which a property owner contests an assessment either informally or formally.

Appraisal Date: The date as of which a property's value is estimated.

Appraisal Methods: The three methods of appraisal, that is, the cost approach, income approach, and sales comparison approach.

Appreciation: Increase in value of a property, in terms of money, from causes other than additions and betterments. For example, a farm may appreciate if a shopping center is built nearby, and property of any sort may appreciate as a result of inflation.

Arm's-Length Sale: A sale in the open market between two unrelated parties, each of whom is reasonably knowledgeable of market conditions and under no undue pressure to buy or sell.

Assemblage: The assembling of adjacent parcels of land into a single unit. Compare "plottage".

Assess: To value property officially for the purpose of taxation.

Assessed Value: (1) A value set on real estate by a government as a basis for levying taxes; (2) The monetary amount for a property as officially entered on the assessment roll for purposes of computing the tax levy. Assessed values differ from the assessor's estimate of actual (market) value for three major reasons: fractional assessment ratios, partial exemptions, and decisions by assessing officials to override market value.

Assessment: The official act of discovering, listing, and estimating property value and other property assessments.

Assessment Card: A card used by an assessor with land and building information, including acreage, sketch or photograph of a building, a description of its location, a list of the principal factors affecting its reproduction cost and depreciation, and the calculations of cost and depreciation. **Also called a "property record card"**.

Assessment Equity: The degree to which assessments bear a consistent relationship to market value.

Assessment Progressivity or Regressivity: An estimated assessing bias such that high-value properties are appraised higher (or lower) than low-value properties in relation to market values. It is computed by the Price Related Differential; however, it is not statistically definitive, but merely an indication of a possible bias.

Assessment to Sale Price Ratio: The ratio of the assessed value to the sale price (or adjusted sale price) of a property; a simple indication of assessment accuracy.

Bias: A statistic is said to be biased if the expected value of that statistic is not equal to the population parameter being estimated. A process is said to be biased if it produces results that vary systematically with some factor that should be irrelevant.

Board of Tax and Land Appeals: Empowered by RSA 71-B, the Board of Tax and Land Appeals has responsibility for: (1) hearing appeals of individual tax assessments, exemptions or refunds, whether levied by the State or its municipalities; (2) hearing petitions for reassessment and determining the adequacy of reassessments ordered by the Board; and (3) determining any appeals of the equalization ratios established by the Commissioner of Revenue Administration.

Capitalization Rate: Any rate used to convert an estimate of future income to an estimate of market value; the ratio of net operating income to market value.

Coefficient of Dispersion (COD): The average deviation of a group of numbers from the median expressed as a percentage of the median. In ratio studies, the average percentage deviation from the median ratio.

Computer Assisted Mass Appraisal (CAMA): A system of appraising property, usually only certain types of real property, that incorporates computer-supported statistical analyses such as multiple regression analysis and adaptive estimation procedure to assist the assessor in estimating market value of a large population of properties..

Confidence Interval: For a given confidence level, the range within which one can conclude that a measure of the population (such as the median or mean appraisal ratio) lies.

Contributory Value: The amount a component of a property contributes to the total market value. For improvements, contributory value must be distinguished from cost.

Deferred Maintenance: Repairs and similar improvements that normally would have been made to a property, but were not made to the property in question, thus increasing the amount of its depreciation.

Depreciation: Loss in value of an object, relative to its replacement cost new, reproduction cost new, or original cost, whatever the cause of the loss in value. Depreciation is sometimes subdivided into three types: physical deterioration (wear and tear), functional obsolescence (suboptimal design in light of current technologies or tastes), and economic obsolescence (poor location or radically diminished demand for the product).

Escheat: The right to have property reverts to the state for nonpayment of taxes or when there are no legal heirs of someone who dies without leaving a will.

Encumbrance: Any limitation that affects property rights and value.

Equalization: The process by which an appropriate governmental body attempts to ensure that all property under its jurisdiction is assessed at the same assessment ratio or at the ratio or ratios required by law. Equalization may be undertaken at many different levels. Equalization among use classes (such as agricultural and industrial property) may be undertaken at the local level, as may equalization among properties in a school district and a transportation district; equalization among counties is usually undertaken by the state to ensure that its aid payments are distributed fairly.

Equalized Values: Assessed values after they have all been multiplied by common factors during equalization.

Estate: A right or interest in property.

Expense: A cost, or that portion of a cost, which, under accepted accounting procedures, is chargeable against income of the current year.

External (Economic) Obsolescence: The loss of value (relative to the cost of replacing a property with property of equal utility) resulting from causes outside the property that suffers the loss. Usually locational in nature in the depreciation of real estate, it is more commonly marketwide in personal property, and is generally considered to be economically infeasible to cure.

Fee Simple Estate: The property rights that refer to absolute ownership unencumbered by any other interest or estate (a right or interest in property), subject only to the limitations imposed by governmental powers such as eminent domain, taxation, police power, and escheat.

Field Review: The practice of reviewing the reasonableness of assessments by viewing the properties in question by looking at their exteriors.

Functional Depreciation: Synonymous with the preferred term “obsolescence”.

Functional Obsolescence: Loss in value of a property resulting from changes in tastes, preferences, technical innovations, or market standards.

IAAO: International Association of Assessing Officers.

Improvements: Buildings, other structures, and attachments or annexations to land that are intended to remain so attached or annexed, such as sidewalks, trees, drives, tunnels, drains, and sewers. Note: Sidewalks, curbing, sewers, and highways are sometimes referred to as "betterment", but the term "improvements" is preferred.

Income: The payments to its owner that a property is able to produce in a given time span, usually a year, and usually net of certain expenses of the property.

Income Approach: One of the three approaches to value, based on the concept that current value is the present worth of future benefits to be derived through income production by an asset over the remainder of its economic life. The income approach uses capitalization to convert the anticipated benefits of the ownership of property into an estimate of present value.

Land-to-Building Ratio (Land-to-Improvement Ratio): The proportion of land area to gross building (improvement) area. For a given use, the most frequently occurring ratio will be that of a functioning economic unit.

Lease: A written contract by which the lessor (owner) transfers the rights to occupy and use real or personal property to another (lessee) for a specified time in return for a specified payment (rent).

Leased Fee Estate: An ownership interest held by a lessor with the rights of use and occupancy conveyed by lease to another.

Leasehold Estate: Interests in real property under the terms of a lease or contract for a specified period of time, in return for rent or other compensation; the interests in a property that are associated with the lessee (the tenant) as opposed to the lessor (the property owner). May have value when market rent exceeds contract rent.

Lessee: The person receiving a possessory interest in property by lease.

Lessor: The person granting a possessory interest in property by lease.

Level of Assessment; Assessment Ratio: The common or overall ratio of assessed values to market values. Three concepts are commonly of interest: what the assessment ratio is legally required to be; what the assessment ratio actually is, and what the assessment ratio seems to be, on the basis of a sample and the application of inferential statistics.

Life Estate: An interest in property that lasts only for a specified person's lifetime; thus the owner of a life estate is unable to leave the property to heirs.

Listing: Performing an interior inspection of a property/building.

Market Approach: Any valuation procedure that incorporates market-derived data, such as the stock and debt technique, gross rent multiplier method and allocation by ratio.

Mass Appraisal: The process of valuing a group of properties as of a given date, using standard methods, employing common data, and allowing for statistical testing.

Mass Appraisal Model: A mathematical expression of how supply and demand factors interact in a market.

Mean: A measure of central tendency. The result of adding all the values of a variable and dividing by the number of values. For example, the mean of 3, 5, and 10 is 18 divided by 3, or 6. Also called arithmetic mean or average.

Median: A measure of central tendency. The value of the middle item in an uneven number of items arranged or arrayed according to size; the arithmetic average of the two central items in an even number of items similarly arranged; a positional average that is not affected by the size of extreme values.

Model Calibration: The development of adjustments, or coefficients based on market analysis that identifies specific factors with an actual effect on market value.

Neighborhood: (1) The environment of a subject property that has a direct and immediate effect on value; (2) A geographic area defined for some useful purpose, such as to ensure for later multiple regression modeling that the properties are homogeneous and share important locational characteristics.

Net Income: (1) The income expected from a property, after deduction of allowable expenses; (2) Net annual income is the amount generated by a property after subtracting vacancy and collection loss, adding secondary income, and subtracting all expenses required to maintain the property for its intended use. The expenses include management fees, reserves for replacement, maintenance, property taxes, and insurance, but do not include debt service, reserves for building additions, or income tax.

Obsolescence: A decrease in the value of a property occasioned solely by shifts in demand from properties of this type to other types of property and/or to personal services. Some of the principal causes of obsolescence are: (1) changes in the esthetic arts; (2) changes in the industrial arts, such as new inventions and new processes; (3) legislative enactments; (4) change in consumer demand for products that results in inadequacy or overadequacy; (5) migration of markets that results in misplacement of the property. Contrast depreciation, physical; depreciation, economic.

Overall Rate (OAR): A capitalization rate that blends all requirements of discount, recapture, and effective tax rates for both land and improvements; used to convert annual net operating income into an indicated overall property value.

Partial Interest: An interest (in property) that is less complete than a fee simple interest. Also, known as a "fractional" interest.

Percent Good: An estimate of the value of a property, expressed as a percentage of its replacement cost, after depreciation of all kinds has been deducted.

Physical Depreciation: Depreciation arising solely from a lowered physical condition of the property or a shortened life span as the result of ordinary use, abuse, and action of the elements.

Plottage Value: (1) The increment of value ascribed to a plot because of its suitability in size, shape, and/or location with reference to other plots (preferred); (2) The excess of the value of a large parcel of land formed by assemblage over the sum of the values of the unassembled parcels. Compare "assemblage".

Price Related Differential (PRD): The mean divided by the weighted mean. The statistic has a slight bias upward and is not statistically definitive; however, price-related differentials above 1.03 tend to indicate assessment regressivity; price-related differentials below 0.98 tend to indicate assessment progressivity.

Principle of Substitution: The principle of substitution states that no buyer will pay more for a good than he or she would have to pay to acquire an acceptable substitute of equal utility in an equivalent amount of time.

Ratio Study: A study of the relationship between assessed values and market sales data.

Real Property: Consists of the interests, benefits, and rights inherent in the ownership of land plus anything permanently or semi-permanently attached to the land or legally defined as immovable; the bundle of rights with which ownership of real estate is endowed. To the extent that "real estate" commonly includes land and any permanent improvements, the two terms can be understood to have the same meaning. Also called "realty".

Replacement Cost New Less Depreciation (RCNLD): In the cost approach, replacement cost new less physical incurable depreciation.

Residual Value of Land: A value ascribed to land alone by deducting from the total value of land and improvements, the value of the improvements.

Reversion: The right of possession commencing on the termination of a particular estate.

Right-of-Way: R/W or RW, an easement consisting of a right of passage through the servient estate. By extension, the strip of land traversed by a railroad or public utility, whether owned by the railroad or utility company or used under easement agreement.

Standard Deviation: The statistic calculated from a set of numbers by subtracting the mean from each value and squaring the remainders, adding together all the squares, dividing by the size of the sample less one, and taking the square root of the result. When the data are normally distributed, one can calculate the percentage of observations within any number of standard deviations of the mean from normal probability tables. When the data are not normally distributed, the standard deviation is less meaningful, and one should proceed cautiously.

Statistics: (1) Numerical descriptions calculated from a sample, for example, the median, mean, or coefficient of dispersion. Statistics are used to estimate corresponding measures, termed parameters, for the population; (2) the science of studying numerical data systematically and of presenting the results usefully. Two main branches exist: descriptive statistics and inferential statistics.

Stratification: The division of a sample of observations into two or more subsets according to some criterion or set of criteria. Such a division may be made to analyze disparate property types, locations, or characteristics, for example.

Subdivision: A tract of land that has been divided into marketable building lots and such public and private ways as are required for access to those lots, and that is covered by a recorded plat.

Tax-Exempt Property: Property entirely excluded from taxation because of its type or use. The most common examples are religious, charitable, educational, or governmental properties. This definition omits property for which the application of a partial exemption reduces net taxable value to zero.

Tax Map: A map drawn to scale and delineated for lot lines or property lines or both, with dimensions or areas and identifying numbers, letters, or names for all delineated lots or parcels.

Tax Rate: The amount of tax stated in terms of a unit of the tax base. For property tax, it is expressed in dollar of tax per $1,000 of value.

Time-Adjusted Sale Price: The price at which a property sold, adjusted for the effects of price changes reflected in the market between the date of sale and the date of analysis.

Total Economic Life: The period of time or units of production over which the operation of an asset is economically feasible, not necessarily the same as its physical life.

Trending: Adjusting the values of a variable for the effects of time. Usually used to refer to adjustments of assessments intended to reflect the effects of inflation and deflation and sometimes also, but not necessarily, the effects of changes in the demand for microlocational goods and services.

Uniformity: The equality of the burden of taxation in the method of assessment.

Use Class: (1) A grouping of properties based on their use rather than, for example, their acreage or construction; (2) one of the following classes of property: single-family residential, multifamily residential, agricultural, commercial, industrial, vacant land and institutional/exempt; (3) Any subclass refinement of the above-for example, townhouse, detached single-family, condominium, house on farm, and so on.

Variance: A measure of dispersion equal to the standard deviation squared.

Zoning: The exercise of the police power to restrict landowners as to the use of their land and/or the type, size, and location of structures to be erected thereon.

SECTION 6

SALES DATA

A. DATE RANGE OF SALES & EFFECTIVE DATE OF NEW VALUE

B. QUALIFIED & UNQUALIFIED SALES REPORT

A. Date Range of Sales & Effective Date of New Value

Effective date of this revaluation is 4/1/2013.

Sales that occurred between 1/1/2012 and 7/11/2013 were used.

Total Number of Qualified Sales Used 81.

B. Qualified & Unqualified Sales Report

The following sales listing for all sales that were verified as qualified "market sales" via PA-34 reports filed by the buyer and seller at the time of the transaction, onsite visit or sales questionnaires were discovered and used in the analysis of costs for the revaluation. There are two listings. The first is a list of all Market Sales commonly called Qualified. The second is a listing of all the sales considered non-market or unqualified sales and not used in the cost analysis.

The sales list includes the following abbreviations, defined here:

LC=Land Use Code

CI	Comm/Ind
EX-F	Exempt-Federal
EX-M	Exempt-Municipal
EX-P	Exempt-PILT
EX-S	Exempt-State
R1	1F Residential (1F = One Family)
R1A	1F Residential Water Access
R1W	1F Residential Waterfront
R2	2F Residential (2F = Two Family)
R2A	2F Residential Water Access
R2W	2F Residential Waterfront
R3	3F Residential (3F = Three Family)
R3A	3F Residential Water Access
R3W	3F Residential Waterfront
R4	4F Residential (4F = Four Family)
R4A	4F Residential Water Access
R4W	4F Residential Waterfront
UTL	Utility-Other
UTLE	Utility-Electric
UTLG	Utility-Gas
UTLW	Utility-Water

NC=Neighborhood Code

A	60%	40% Below the Average
B	70%	30% Below the Average
C	80%	20% Below the Average
D	90%	10% Below the Average
E	100%	Average for the Town
F	110%	10% Above the Average
G	120%	20% Above the Average
H	130%	30% Above the Average
I	140%	40% Above the Average
J	150%	50% Above the Average
K	160%	60% Above the Average
L	170%	70% Above the Average
M	180%	80% Above the Average
N	190%	90% Above the Average
P	200%	100% Above the Average
Q	225%	125% Above the Average
R	250%	150% Above the Average
S	275%	175% Above the Average
T	300%	200% Above the Average
X	Backland	Not Having Road Frontage

BR=Building Square Foot Rate – See Section 9C Final Cost Tables

SH=Story Height

A	1 Story Frame	E	2.5 Story Frame
B	1.5 Story Frame	F	2.75 Story Frame
C	1.75 Story Frame	G	3 Story Frame
D	2 Story Frame	H	3.5+ Story Frame
		I	Split Level

EF AREA = Effective Area. This is the actual area of each section of the building adjusted for cost. In other words, 800 square feet of first floor is more valuable than 800 square feet of basement, so the basement square footage is adjusted down for cost and the total effective area is the sum of all the sub areas adjusted for cost.

I = This column will be either “I” for improved, meaning a land and building sale or “V” for vacant, meaning a land only sale.

Q = This column is “Q” for qualified market sale or “U” for unqualified market sale.

Auburn Sales Analysis Report

Ratio	Map	Lot	Sub	Zone	Acres	LC	NC	BR	SH Eff. Area	Sale Price	Assessment Sale Date	I	Q	Unqualified Description Grantor	Prior Year Assessment
1.116	000008	000060	000001	02	2.00	R1	F	RSA	B 1,802	$ 233,000	$ 260,000 01/13/2012	I	Q	GALLANT, PATRICIA E.,	$ 0
1.104	000011	000037	0001-6	02	2.18	R1	F	RSA	C 2,234	$ 235,000	$ 259,500 01/27/2012	I	Q	WHITTEMORE CAROL J	$ 0
1.037	000012	000019	000005	02	5.39	R1	G	RSA	D 2,599	$ 312,533	$ 324,000 01/30/2012	I	Q	VOSSLER, GEORGE C & MA	$ 0
1.076	000008	000013	000017	02	2.89	R1	G	RSA	E 3,712	$ 375,000	$ 403,600 02/13/2012	I	Q	OHAR OREST P	$ 0
0.993	000002	000003	000062	01	1.47	R1	H	RSA	D 3,511	$ 440,200	$ 437,100 02/29/2012	I	Q	ESPANA BUILDING & DEVE	$ 0
1.094	000005	000101	000000	02	2.80	R1	E	RSA	C 1,680	$ 204,000	$ 223,100 03/23/2012	I	Q	WOLPER BARRY	$ 0
0.966	000026	000019	000000	03	2.00	CI	E	CFF	A 1,491	$ 290,000	$ 280,100 03/30/2012	I	Q	TSOURVAKAS, VISSARION	$ 0
0.950	000005	000069	000022	01	0.91	R1	H	RSA	D 2,681	$ 379,533	$ 360,700 04/02/2012	I	Q	CHESTER HILL LLC	$ 0
1.110	000014	000030	000000	02	1.22	R1	E	RSA	A 1,638	$ 202,000	$ 224,300 04/02/2012	I	Q	338 WILSON CROSSING LL	$ 0
1.159	000017	000008	000000	02	0.50	R1	E	RSA	A 1,444	$ 162,533	$ 188,300 04/17/2012	I	Q	SWEENEY DAVID F	$ 0
1.084	000004	000003	000002	02	2.16	R1	F	RSA	C 2,570	$ 140,000	$ 151,800 04/20/2012	V	Q	WILSON RALPH H	$ 0
0.973	000002	000003	000031	01	1.08	R1	H	RSA	D 3,353	$ 425,000	$ 413,400 04/25/2012	I	Q	KLEIN EDWARD E	$ 0
0.996	000005	000069	000030	01	1.15	R1	H	RSA	D 2,381	$ 347,800	$ 346,300 04/27/2012	I	Q	CHESTER HILL LLC	$ 0
0.983	000001	000016	0023-1	03	0.00	CI	E	CWH	D 3,057	$ 130,000	$ 127,800 05/14/2012	I	Q	BYPASS PROPERTIES LLC	$ 0
1.013	000001	000016	0023-2	03	0.00	CI	E	CWH	D 2,750	$ 120,000	$ 121,500 05/14/2012	I	Q	BYPASS PROPERTIES LLC	$ 0
0.965	000005	000069	000031	01	0.96	R1	H	RSA	D 3,053	$ 398,000	$ 384,000 05/22/2012	I	Q	CHESTER HILL LLC	$ 0
0.915	000005	000071	000012	02	3.73	R1W	H	RSA	D 2,958	$ 440,000	$ 402,800 05/25/2012	I	Q	COCHRAN III, ARTHUR	$ 0
0.951	000006	000014	000001	02	2.10	R1	E	RSA	D 3,293	$ 388,000	$ 369,000 06/05/2012	I	Q	LEMAY DANIEL	$ 0
0.993	000012	000002	000001	02	2.01	R1	E	RSA	C 3,875	$ 145,000	$ 144,000 06/05/2012	V	Q	THOMAS JAMES	$ 0
1.021	000011	000008	000004	02	6.03	R1	F	RSA	C 3,308	$ 325,000	$ 331,900 06/11/2012	I	Q	RUSSO, JOHN	$ 0

Ratio	Map	Lot	Sub	Zone	Acres	LC	NC	BR	SH Eff. Area	Sale Price	Assessment Sale Date	I	Q	Unqualified Description Grantor	Prior Year Assessment
0.986	000009	000003	000009	02	2.22	R1	G	RSA	C 2,773	$ 338,000	$ 333,100 06/15/2012	I	Q	DANOS, SANDRA J	$ 0
1.112	000014	000017	000000	02	1.15	R1	F	RSA	A 1,933	$ 235,000	$ 261,400 06/15/2012	I	Q	BOULANGER, ROBERT A	$ 0
0.966	000009	000028	0005-3	02	2.01	R1	H	RSA	D 2,928	$ 344,933	$ 333,200 06/18/2012	I	Q	MARSH, GARY S	$ 0
0.985	000002	000003	000030	01	1.03	R1	H	RSA	C 3,199	$ 404,000	$ 398,100 07/03/2012	I	Q	ESPANA BUILDING & DEVE	$ 0
0.973	000005	000069	000018	01	1.02	R1	H	RSA	D 2,762	$ 379,933	$ 369,500 07/03/2012	I	Q	CHESTER HILL LLC	$ 0
1.105	000011	000018	000018	01	2.63	R1	G	RSA	D 3,176	$ 355,000	$ 392,400 07/27/2012	I	Q	VALBONA, STEVEN M	$ 0
0.919	000002	000003	000061	01	1.58	R1	H	RSA	D 3,312	$ 464,800	$ 427,100 08/06/2012	I	Q	ESPANA BLDG & DEV	$ 0
0.905	000005	000069	000019	01	0.90	R1	H	RSA	D 3,034	$ 437,733	$ 396,100 08/06/2012	I	Q	CHESTER HILL LLC	$ 0
1.157	000005	000043	000014	01	0.78	R1	H	RSA	C 3,784	$ 363,000	$ 419,900 08/09/2012	I	Q	JMJ PROPERTIES LLC	$ 0
1.034	000005	000069	000017	01	1.13	R1	H	RSA	D 2,695	$ 352,533	$ 364,600 08/13/2012	I	Q	CHESTER HILL LLC	$ 0
1.000	000008	000017	000008	02	2.48	R1	G	RSA	D 3,553	$ 369,000	$ 368,900 08/21/2012	I	Q	GALLER, SARAH C & MICH	$ 0
0.949	000017	000085	000000	02	0.66	R1	E	RSA	A 1,712	$ 241,533	$ 229,300 08/22/2012	I	Q	THOMPSON SCOTT	$ 0
0.992	000005	000043	000017	01	0.73	R1	H	RSA	D 2,727	$ 357,000	$ 354,200 08/23/2012	I	Q	JMJ PROPERTIES LLC	$ 0
0.900	000008	000048	0001-8	02	2.00	R1	H	RSA	D 2,564	$ 400,533	$ 360,400 08/24/2012	I	Q	MAVERICK DEVELOPMENT C	$ 0
0.905	000008	000048	000001	02	3.36	R1	H	RSA	D 3,352	$ 455,000	$ 412,000 09/04/2012	I	Q	MAVERICK DEVELOPMENT C	$ 0
0.992	000005	000043	000015	01	0.73	R1	H	RSA	C 3,307	$ 395,000	$ 391,800 09/10/2012	I	Q	JMJ PROPERTIES LLC	$ 0
0.927	000012	000018	0003-1	02	3.96	R2	G	RSA	A 5,940	$ 208,833	$ 193,500 09/10/2012	V	Q	DROUIN REJEAN AS TRUST	$ 0
0.962	000026	000007	000001	03	2.17	R1	E	RSA	E 3,221	$ 375,000	$ 360,600 09/10/2012	I	Q	FOSKITT PAUL J & SUSAN	$ 0
0.991	000002	000003	000010	01	1.29	R1	H	RSA	D 3,199	$ 395,000	$ 391,500 09/17/2012	I	Q	TARNESS MATTHEW	$ 0
1.006	000011	000045	000003	02	2.33	R1	F	RSA	D 2,084	$ 248,066	$ 249,600 09/17/2012	I	Q	HOLT, CHRISTOPHER M	$ 0
1.022	000009	000041	000000	02	1.00	R1	E	RSA	D 2,755	$ 307,933	$ 314,800 09/25/2012	I	Q	ESPANA BUILDING & DEVE	$ 0

Ratio	Map	Lot	Sub	Zone	Acres	LC	NC	BR	SH Eff. Area	Sale Price	Assessment Sale Date	I	Q	Unqualified Description Grantor	Prior Year Assessment
1.054	000010	000018	000001	02	2.06	R1	E			$ 130,000	$ 137,000 09/25/2012	V	Q	ZYLA WILLIAM P	$ 0
0.931	000005	000069	000003	01	2.47	R1	H	RSA	D 3,042	$ 439,933	$ 409,400 09/27/2012	I	Q	CHESTER HILL LLC	$ 0
0.979	000009	000028	0001-9	02	7.28	R1	H	RSA	D 4,599	$ 500,000	$ 489,600 10/09/2012	I	Q	STAPEL SCOTT L	$ 0
1.038	000002	000003	000057	01	1.18	R1	H	RSA	D 2,375	$ 330,533	$ 343,000 10/12/2012	I	Q	ESPANA BUILDING & DEVE	$ 0
1.016	000005	000043	000011	01	0.84	R1	H	RSA	D 2,461	$ 330,533	$ 335,700 10/17/2012	I	Q	JMJ PROPERTIES LLC	$ 0
1.067	000013	000015	000001	03	2.04	R1	E	RSA	E 2,753	$ 309,200	$ 329,800 10/17/2012	I	Q	ADELPHI HOMES INC	$ 0
0.966	000005	000069	000007	01	2.67	R1	H	RSA	D 3,297	$ 435,133	$ 420,300 10/24/2012	I	Q	CHESTER HILL LLC	$ 0
1.012	000002	000009	000033	01	2.17	R1	H	RSA	D 2,866	$ 381,733	$ 386,500 11/01/2012	I	Q	ESPANA BUILDING & DEVE	$ 0
0.987	000002	000003	000063	01	2.12	R1	H	RSA	E 5,434	$ 551,400	$ 544,200 11/19/2012	I	Q	ESPANA BUILDING & DEVE	$ 0
1.047	000005	000043	000019	01	0.66	R1	H	RSA	D 2,769	$ 337,000	$ 353,000 11/19/2012	I	Q	JMJ PROPERTIES LLC	$ 0
0.975	000005	000069	000015	01	1.15	R1	H	RSA	D 2,949	$ 382,933	$ 373,400 12/04/2012	I	Q	CHESTER HILL LLC	$ 0
0.936	000005	000069	000014	01	0.73	R1	H	RSA	A 2,709	$ 399,800	$ 374,300 12/10/2012	I	Q	CHESTER HILL LLC	$ 0
0.995	000011	000056	000017	02	2.00	R1	F	RSA	D 2,409	$ 286,000	$ 284,700 12/17/2012	I	Q	BONNIER, JAMES A	$ 0
1.038	000005	000043	000016	01	0.80	R1	H	RSA	D 3,599	$ 398,000	$ 413,300 12/19/2012	I	Q	JMJ PROPERTIES LLC	$ 0
1.136	000017	000001	000000	02	0.69	R1	E	RSA	A 1,825	$ 180,000	$ 204,400 12/21/2012	I	Q	BAKER JEFF	$ 0
0.981	000009	000028	001-13	02	3.13	R1	H			$ 185,000	$ 181,400 12/26/2012	V	Q	TENN SYLVIA C	$ 0
0.909	000005	000069	000013	01	0.87	R1	H	RSA	D 3,552	$ 463,533	$ 421,500 12/31/2012	I	Q	CHESTER HILL LLC	$ 0
0.968	000009	000028	000001	04	186.41	CUUO	E			$ 465,000	$ 450,100 01/04/2013	V	Q	TENN JAMES	$ 0
1.012	000002	000003	000058	01	1.38	R1	H	RSA	D 2,375	$ 340,000	$ 344,000 01/14/2013	I	Q	ESPANA BUILDING & DEVE	$ 0
0.976	000005	000043	000002	01	0.83	R1	H	RSA	D 2,192	$ 337,000	$ 328,800 01/16/2013	I	Q	JACKSON TYLER M	$ 0
0.858	000005	000069	000021	01	0.91	R1	H	RSA	D 3,447	$ 487,800	$ 418,400 01/28/2013	I	Q	CHESTER HILL LLC	$ 0

Ratio	Map	Lot	Sub	Zone	Acres	LC	NC	BR	SH Eff. Area	Sale Price	Assessment Sale Date	I	Q	Unqualified Description Grantor	Prior Year Assessment
0.985	000002	000003	000056	01	1.16	R1	H	RSA	D 2,273	$ 340,352	$ 335,300 01/29/2013	I	Q	ESPANA BUILDING & DEVE	$ 0
1.072	000014	000005	000000	02	1.03	R1	F	RSA	A 1,996	$ 240,000	$ 257,200 01/29/2013	I	Q	MARTIN, RICHARD P	$ 0
0.918	000025	000015	000000	02	0.12	R1	E	RSA	C 1,530	$ 170,000	$ 156,100 01/31/2013	I	Q	RAYMOND, CHRIS A	$ 0
0.989	000005	000002	000008	02	2.00	R1	F	RSA	D 1,862	$ 239,933	$ 237,400 02/01/2013	I	Q	MULLEN AMANDA R	$ 0
0.832	000008	000048	0001-3	02	13.56	R1	H	RSA	D 3,420	$ 250,666	$ 208,600 02/21/2013	V	Q	MAVERICK DEVELOPMENT C	$ 0
1.042	000020	000018	000000	02	10.23	R1	E	RSA	D 2,049	$ 268,900	$ 280,100 03/15/2013	I	Q	SOUTHWORTH, STEVEN	$ 0
1.000	000002	000003	000050	01	1.20	R1	H	RSA	D 3,419	$ 395,000	$ 394,900 03/18/2013	I	Q	LIMA ROBERT	$ 0
1.030	000005	000010	000006	02	2.01	R1	F	RSA	A 1,860	$ 230,000	$ 236,800 03/21/2013	I	Q	BIENVENUE, LEONARD	$ 0
0.935	000005	000043	000001	01	0.73	R1	H	RSA	C 2,502	$ 357,000	$ 333,700 03/28/2013	I	Q	JMJ PROPERTIES LLC	$ 0
1.009	000005	000043	000009	01	0.93	R1	H	RSA	D 3,098	$ 370,600	$ 374,100 03/28/2013	I	Q	JMJ PROPERTIES LLC	$ 0
0.989	000002	000009	000029	01	2.12	R1	H	RSA	D 3,362	$ 430,800	$ 425,900 04/01/2013	I	Q	ESPANA BUILDING & DEVE	$ 0
0.943	000005	000029	000000	02	62.00	CUUO	E			$ 360,000	$ 339,600 04/01/2013	V	Q	GARABEDIAN, CHARLES	$ 0
1.000	000005	000036	000000	02	1.00	R1	E			$ 140,000	$ 140,000 04/01/2013	V	Q	GARABEDIAN, CHARLES P.	$ 0
1.063	000008	000006	000001	02	5.38	R1	E	RSA	D 3,282	$ 275,000	$ 292,400 04/01/2013	I	Q	STEIN, BRUCE P	$ 0
1.002	000022	000016	000000	02	0.41	R1	E	RSA	A 1,724	$ 196,000	$ 196,400 04/02/2013	I	Q	O'CONNELL, SEAN P	$ 0
0.935	000007	000025	000041	02	0.61	R1	G	RSA	D 3,159	$ 347,000	$ 324,600 04/05/2013	I	Q	BISSETT BRUCE A	$ 0
0.903	000021	000007	000000	02	0.16	R1	E	RSA	A 1,348	$ 179,933	$ 162,400 04/18/2013	I	Q	DESLAURIERS, NANCY	$ 0
0.985	000013	000023	000023	02	2.00	R1	F	RSA	A 1,558	$ 228,000	$ 224,600 05/02/2013	I	Q	WILSON THOMAS W	$ 0
1.027	000002	000003	000020	01	1.56	R1	H	RSA	D 2,831	$ 368,000	$ 377,900 05/24/2013	I	Q	VELAZQUEZ, MICHAEL A	$ 0

Auburn Sales Analysis Report

Ratio	Map	Lot	Sub	Zone	Acres	LC	NC	BR	SH Eff. Area	Sale Price	Assessment Sale Date	I	Q	Unqualified Description Grantor	Prior Year Assessment
1.358	000010	000022	000000	02	16.00	R2	E	RSA	C 2,868	$ 215,000	$ 292,000 01/05/2012	I	U	LNDLRD/TENANT SALE ROGERS JEFFREY C	$ 0
9,015.000	000026	000007	000001	03	2.17	R1	E	RSA	E 3,221	$ 40	$ 360,600 01/10/2012	I	U	NON MARKET TRANSFER FOSKITT PAUL J	$ 0
1.245	000005	000017	000002	02	5.07	R1	E	RSA	B 2,486	$ 230,000	$ 286,400 01/13/2012	I	U	ESTATE SALE/FDCY COV GELINAS, JOSEPH O (ES	$ 0
14,155.000	000009	000028	001-16	02	3.22	R1	H	RSA	D 5,342	$ 40	$ 566,200 01/18/2012	I	U	NON MARKET TRANSFER ILLER DAVID G	$ 0
7,090.000	000008	000060	000004	02	2.00	R1	F	RSA	C 2,576	$ 40	$ 283,600 01/23/2012	I	U	NON MARKET TRANSFER DAVIS, WAYNE P	$ 0
1.154	000002	000044	000005	01	2.38	R1	E	RSA	C 2,161	$ 208,000	$ 240,100 01/31/2012	I	U	ESTATE SALE/FDCY COV NAULT NORMAN W	$ 0
0.944	000004	000011	0002-9	02	2.17	R2	H	RSA	C 4,573	$ 460,000	$ 434,100 02/01/2012	I	U	IMPROVED AFTER SALE O'NEIL, JOAN M	$ 0
1.218	000025	000047	000000	04	3.69	CI	E	CSG	A 5,368	$ 340,000	$ 414,000 02/08/2012	I	U	IMPROVED AFTER SALE BTG PROPERTY #1 LLC	$ 0
1.190	000003	000003	000001	02	5.01	R1	E	RSA	A 2,398	$ 300,000	$ 357,100 02/10/2012	I	U	FAMILY/RELAT GRNTR/E WINSTON, MARJORIE M	$ 0
5,432.500	000020	000001	000000	02	2.08	R1	E	RSA	A 1,311	$ 40	$ 217,300 02/21/2012	I	U	NON MARKET TRANSFER CALDWELL ELAINE TATULI	$ 0
1.750	000005	000094	000000	01	1.00	R1	E	RSA	E 3,259	$ 80,000	$ 140,000 03/21/2012	V	U	QUICK SALE BRAVO ROMEO SIX LLC	$ 0
1.207	000011	000030	002-10	01	1.12	R1	G	RSA	D 3,024	$ 305,000	$ 368,200 03/23/2012	I	U	LNDLRD/TENANT SALE ONESSIMO PAUL R & VICT	$ 0
9,500.000	000005	000069	000029	01	1.83	R1	H	RSA	D 2,888	$ 40	$ 380,000 03/26/2012	I	U	NON MARKET TRANSFER BERNIER BRYAN M	$ 0
11,380.000	000005	000006	000019	02	2.67	R1	F	RSA	A 1,596	$ 20	$ 227,600 03/27/2012	I	U	FORECLOSURE PNC BANK	$ 0
0.973	000010	000026	000000	02	0.32	R2W	E	RSA	C 3,924	$ 300,000	$ 291,800 04/16/2012	I	U	LNDLRD/TENANT SALE BRETON, ARTHUR	$ 0
1.367	000001	000036	000014	02	2.01	R1	F	RSA	A 1,492	$ 168,000	$ 229,600 04/17/2012	I	U	PRE-FORECLSR SALE ROGERS, VAUGHN H	$ 0
1.412	000024	000003	000000	03	0.29	R1	E	RSA	A 1,065	$ 99,000	$ 139,800 04/18/2012	I	U	FORECLOSURE HAHN, ERICK	$ 0
1.757	000005	000020	000000	02	2.32	R1	E	MHS	A 1,333	$ 90,500	$ 159,000 04/19/2012	I	U	BANK FORECLSR SALE FEDERAL NATIONAL MORTG	$ 0
1.602	000031	000014	000000	02	0.99	R1	E	RSA	A 1,621	$ 125,000	$ 200,300 04/23/2012	I	U	BANK FORECLSR SALE JP MORGAN CHASE BANK N	$ 0

Ratio	Map	Lot	Sub	Zone	Acres	LC	NC	BR	SH Eff. Area	Sale Price	Assessment Sale Date	I	Q	Unqualified Description Grantor	Prior Year Assessment
2.975	000027	000014	000000	03	0.49	R1	E	RSA	B 1,601	$ 60,000	$ 178,500 05/01/2012	I	U	ESTATE SALE/FDCY COV WILSON, DONALD D	$ 0
11,087.500	000008	000013	000015	02	2.88	R1	G	RSA	D 3,906	$ 40	$ 443,500 05/02/2012	I	U	NON MARKET TRANSFER MARCOTTE JOHN D	$ 0
1.896	000008	000021	000000	02	2.00	R1	E			$ 70,000	$ 132,700 05/09/2012	I	U	BANK FORECLSR SALE BANK OF NEW YORK	$ 0
1.785	000025	000038	000000	02	0.60	R1	E	RSA	A 1,264	$ 131,000	$ 233,900 05/15/2012	I	U	ESTATE SALE/FDCY COV GENDRON, ARMAND G	$ 0
8,895.000	000009	000016	0020-1	02	2.02	R1	G	RSA	D 2,810	$ 40	$ 355,800 05/16/2012	I	U	NON MARKET TRANSFER MONROE MARK A	$ 0
6,485.000	000002	000006	000003	02	2.00	R1	E	RSA	C 2,462	$ 40	$ 259,400 05/30/2012	I	U	NON MARKET TRANSFER TOURVILLE, MICHAEL P	$ 0
2.279	000024	000003	000000	03	0.29	R1	E	RSA	A 1,065	$ 61,333	$ 139,800 06/06/2012	I	U	BANK FORECLSR SALE BANK OF NEW YORK MELLO	$ 0
0.975	000008	000017	000010	02	4.40	R1	G	RSA	D 3,113	$ 342,074	$ 333,600 06/18/2012	I	U	FORECLOSURE KOVOLYAN JOSEPH W	$ 0
1.267	000004	000026	000000	02	1.25	R1	F	RSA	A 1,833	$ 185,000	$ 234,400 06/22/2012	I	U	QUICK SALE KOCIUBA, JAMES T. & HI	$ 0
1.279	000008	000032	000000	02	2.03	R1	E	RSA	C 2,292	$ 183,240	$ 234,300 06/25/2012	I	U	FORECLOSURE ROLFE BRUCE	$ 0
1.027	000009	000028	0001-7	02	7.78	R1	H	RSA	D 4,271	$ 470,000	$ 482,800 06/25/2012	I	U	PRE-FORECLSR SALE WINGFIELD KELLEY	$ 0
6,330.000	000005	000068	000000	01	5.35	R1	E	RSA	A 1,938	$ 40	$ 253,200 06/26/2012	I	U	NON MARKET TRANSFER SENECHAL, ROLAND A	$ 0
0.794	000018	000038	000000	02	1.49	R1	E	RSA	A 2,187	$ 300,365	$ 238,500 06/27/2012	I	U	FORECLOSURE MILTON ALBERT	$ 0
1.240	000011	000042	000007	02	2.00	R1	F	RSA	A 1,516	$ 184,000	$ 228,200 07/13/2012	I	U	QUICK SALE MERRILL, ROBERT	$ 0
6,130.000	000015	000027	000000	02	1.15	R1	F	RSA	A 1,876	$ 40	$ 245,200 07/16/2012	I	U	NON MARKET TRANSFER THOMAS, WILLIAM E	$ 0
8,130.000	000005	000017	000001	02	5.02	R1	E	RSA	C 2,402	$ 40	$ 325,200 07/18/2012	I	U	NON MARKET TRANSFER GEOFFROY,SR RONALD P &	$ 0
1.024	000002	000003	000024	01	1.05	R1	H	RSA	D 2,674	$ 329,933	$ 337,700 07/23/2012	I	U	UNCLASSFYD EXCLUSION SHANBHAG PRASANNA	$ 0
7,710.000	000005	000045	000006	01	4.47	R1	E	RSA	C 2,991	$ 40	$ 308,400 07/23/2012	I	U	NON MARKET TRANSFER JACKSON, RODNEY P	$ 0
5,502.500	000004	000033	000002	02	1.53	R1	E	RSA	A 1,274	$ 40	$ 220,100 07/26/2012	I	U	NON MARKET TRANSFER CHRISTENSEN, CHARLES E	$ 0
0.816	000022	000020	000000	02	0.25	R1	E	RSA	B 1,232	$ 206,077	$ 168,200 07/26/2012	I	U	FORECLOSURE BARTLETT MATTHEW	$ 0

Ratio	Map	Lot	Sub	Zone	Acres	LC	NC	BR	SH Eff. Area	Sale Price	Assessment Sale Date	I	Q	Unqualified Description Grantor	Prior Year Assessment
1.409	000013	000034	000001	02	6.09	R1	E	MHS	A 1,135	$ 135,000	$ 190,200 07/27/2012	I	U	PRE-FORECLSR SALE VAIL,PAULA J	$ 0
2.650	000018	000038	000000	02	1.49	R1	E	RSA	A 2,187	$ 90,000	$ 238,500 07/30/2012	I	U	BANK FORECLSR SALE BANK OF NEW YORK MELLO	$ 0
1.124	000019	000002	000001	02	5.09	R1	E	RSA	D 4,212	$ 350,000	$ 393,300 07/30/2012	I	U	PRE-FORECLSR SALE WILLIAMS DAVID J	$ 0
1.264	000005	000006	000019	02	2.67	R1	F	RSA	A 1,596	$ 180,000	$ 227,600 07/31/2012	I	U	BANK FORECLSR SALE SECRETARY OF HOUSING	$ 0
38.083	000002	000039	000000	01	39.52	CUFL	E			$ 6,000	$ 228,500 08/02/2012	V	U	FAMILY/RELAT GRNTR/E GUINESSO GERALD SR	$ 0
1.357	000004	000024	000010	02	1.13	R1	F	RSA	A 1,608	$ 185,000	$ 251,000 08/03/2012	I	U	FORECLOSURE GRIECO JEFFREY M	$ 0
4.276	000015	000031	000000	02	1.12	R1	F	RSA	C 2,457	$ 61,840	$ 264,400 08/13/2012	I	U	FORECLOSURE KOMISAR, LAURA	$ 0
3,795.000	000004	000003	000002	02	2.16	R1	F	RSA	C 2,570	$ 40	$ 151,800 08/20/2012	V	U	NON MARKET TRANSFER CASE JOHN B	$ 0
0.066	000011	000022	000000	01	5.60	R1	X			$ 148,370	$ 9,800 08/20/2012	V	U	MULTI-TOWN PROPERTY PITMAN, GRACE	$ 0
9,815.000	000002	000003	000022	01	1.53	R1	H	RSA	D 2,916	$ 40	$ 392,600 08/23/2012	I	U	NON MARKET TRANSFER LANGLOIS PAULINE R	$ 0
1.362	000015	000030	000000	02	1.07	R1	E	RSA	A 1,687	$ 172,073	$ 234,300 09/06/2012	I	U	FORECLOSURE HOVASSE PHILLIP	$ 0
8,422.500	000004	000023	000000	02	2.21	R1	F	RSA	C 3,722	$ 40	$ 336,900 09/07/2012	I	U	NON MARKET TRANSFER PANE, KAREN A	$ 0
1.067	000012	000011	000000	02	1.38	R1	E	RSA	A 1,934	$ 227,000	$ 242,200 09/10/2012	I	U	ESTATE SALE/FDCY COV SAMARA WILLIAM	$ 0
7,130.000	000011	000004	000005	02	2.00	R1	F	RSA	D 2,407	$ 40	$ 285,200 09/12/2012	I	U	NON MARKET TRANSFER DONOVAN, TIMOTHY F	$ 0
7,130.000	000011	000004	000005	02	2.00	R1	F	RSA	D 2,407	$ 40	$ 285,200 09/12/2012	I	U	NON MARKET TRANSFER DONOVAN, MARGARET P	$ 0
8,295.000	000011	000030	0002-9	01	1.14	R1	G	RSA	D 2,435	$ 40	$ 331,800 09/14/2012	I	U	NON MARKET TRANSFER CRISTOFORI NICHOLAS D	$ 0
2.053	000008	000017	000010	02	4.40	R1	G	RSA	D 3,113	$ 162,533	$ 333,600 10/01/2012	I	U	BANK FORECLSR SALE FEDERAL HOME LOAN MORT	$ 0
0.229	000005	000043	000011	01	0.84	R1	H	RSA	D 2,461	$ 722,000	$ 165,000 10/07/2012	V	U	SUBDIVISN-ASMT/SALE GAGNON JEAN	$ 0
0.233	000005	000043	000013	01	0.74	R1	H	RSA	D 2,703	$ 722,000	$ 168,500 10/07/2012	V	U	SUBDIVISN-ASMT/SALE GAGNON JEAN	$ 0
8,217.500	000002	000044	000007	01	3.18	R1	F	RSA	D 3,016	$ 40	$ 328,700 10/18/2012	I	U	NON MARKET TRANSFER ROY STEVEN	$ 0

Ratio	Map	Lot	Sub	Zone	Acres	LC	NC	BR	SH Eff. Area	Sale Price	Assessment Sale Date	I	Q	Unqualified Description Grantor	Prior Year Assessment
0.668	000031	000018	000000	03	5.30	CI	E	CFF	A 2,356	$ 675,000	$ 451,000 10/24/2012	I	U	COMPLEX COMMRCL SALE DOLLARD, MICHAEL	$ 0
0.000	000008	000029	000000	02	0.00	CUUO	F			$ 375,000	$ 0 10/25/2012	V	U	MULTI PARCEL SALE WOOD STANLEY P & WILLI	$ 0
0.424	000008	000029	000003	02	2.00	R1	H			$ 375,000	$ 159,100 10/25/2012	V	U	MULTI PARCEL SALE WOOD STANLEY P,WILLIAM	$ 0
1.392	000011	000042	000002	02	2.14	R1	F	RSA	A 1,561	$ 172,000	$ 239,500 10/31/2012	I	U	QUICK SALE MARKLEY, TERRY L	$ 0
10,615.000	000008	000042	000000	02	43.00	R1	F	RSA	C 1,837	$ 40	$ 424,600 11/01/2012	I	U	ESTATE SALE/FDCY COV WOVKONISH, PETER, NANC	$ 0
3.592	000003	000006	000011	02	0.00	R1	D	RSA	A 1,835	$ 25,000	$ 89,800 11/02/2012	I	U	ESTATE SALE/FDCY COV REEVES, PAUL& THERESE	$ 0
6,487.500	000011	000037	0001-6	02	2.18	R1	F	RSA	C 2,234	$ 40	$ 259,500 11/08/2012	I	U	NON MARKET TRANSFER LANGLOIS PETER	$ 0
6,637.500	000012	000016	000017	02	2.14	R1	F	RSA	D 2,125	$ 40	$ 265,500 11/09/2012	I	U	NON MARKET TRANSFER CLUNIE WILLIAM F	$ 0
2.471	000028	000005	000001	02	0.14	R1	E	RSA	D 823	$ 80,000	$ 197,700 11/09/2012	I	U	PRE-FORECLSR SALE BYRNE JR WILLIAM A	$ 0
1.501	000012	000016	000011	02	2.07	R1	F	RSA	A 1,770	$ 166,000	$ 249,100 11/27/2012	I	U	FORECLOSURE SHIPKO BETH RILEY	$ 0
12,285.000	000004	000011	0002-1	02	2.06	R1	H	RSA	D 4,342	$ 40	$ 491,400 11/30/2012	I	U	NON MARKET TRANSFER GORDON CHARLES N/VICKI	$ 0
9,920.000	000002	000034	000002	01	3.00	R1	E	RSA	D 4,109	$ 40	$ 396,800 12/06/2012	I	U	NON MARKET TRANSFER DIORIO, GERARD F	$ 0
7,160.000	000011	000037	000027	02	5.56	R1	F	RSA	D 2,316	$ 40	$ 286,400 12/11/2012	I	U	NON MARKET TRANSFER WALLACE, ROBERT R	$ 0
4,385.000	000002	000037	000000	01	12.50	CUFL	E			$ 40	$ 175,400 12/14/2012	V	U	NON MARKET TRANSFER GAGNON, JEAN	$ 0
1.991	000022	000020	000000	02	0.25	R1	E	RSA	B 1,232	$ 84,500	$ 168,200 12/14/2012	I	U	BANK FORECLSR SALE SECRETARY OF HOUSING &	$ 0
1.575	000025	000031	000000	02	0.50	R1	E	RSA	A 1,009	$ 106,133	$ 167,200 12/17/2012	I	U	PRE-FORECLSR SALE QUINN, DAVID A	$ 0
2.753	000005	000067	000000	01	0.83	R1	E	RSA	A 1,028	$ 62,000	$ 170,700 12/26/2012	I	U	FORECLOSURE MADDEN DENISE	$ 0
1.200	000016	000005	000000	02	1.03	R1	E	RSA	A 2,363	$ 225,000	$ 270,000 12/26/2012	I	U	DIVORCE PRTY GRNTR/E WELCH II ROBERT W	$ 0
4,942.500	000028	000005	000001	02	0.14	R1	E	RSA	D 823	$ 40	$ 197,700 12/26/2012	I	U	NON MARKET TRANSFER MESMER FRANK	$ 0
1.209	000002	000003	000006	01	1.24	R1	H	RSA	C 3,787	$ 355,000	$ 429,300 12/27/2012	I	U	PRE-FORECLSR SALE CHADWICK-JR, GEORGE A	$ 0

Ratio	Map	Lot	Sub	Zone	Acres	LC	NC	BR	SH Eff. Area	Sale Price	Assessment Sale Date	I	Q	Unqualified Description Grantor	Prior Year Assessment
2.334	000018	000032	000000	02	1.00	R1	E	RSA	C 1,991	$ 95,000	$ 221,700 01/14/2013	I	U	BANK FORECLSR SALE FEDERAL HOME MORTGAGE	$ 0
1.834	000008	000032	000000	02	2.03	R1	E	RSA	C 2,292	$ 127,732	$ 234,300 01/22/2013	I	U	BANK FORECLSR SALE FEDERAL NATIONAL MORTG	$ 0
1.292	000018	000054	000001	02	2.61	R1	E	RSA	B 4,574	$ 241,500	$ 312,000 01/23/2013	I	U	PRE-FORECLSR SALE PHILLIPS, ANDREW	$ 0
1.855	000012	000016	000011	02	2.07	R1	F	RSA	A 1,770	$ 134,266	$ 249,100 01/25/2013	I	U	BANK FORECLSR SALE DEUTSCHE BANK	$ 0
1.447	000023	000011	000000	03	0.41	R1	E	RSA	C 1,520	$ 128,250	$ 185,600 01/25/2013	I	U	FORECLOSURE O'FLAHERTY TIMOTHY P	$ 0
2.779	000022	000003	000000	02	0.69	R1	E	RSA	C 1,647	$ 75,000	$ 208,400 01/30/2013	I	U	FORECLOSURE KINGSBURY, BARBARA M	$ 0
1.107	000008	000066	000007	02	2.17	R1	F	RSA	C 2,573	$ 252,483	$ 279,500 02/06/2013	I	U	FORECLOSURE CONNARE, DAVID F	$ 0
0.868	000009	000003	000004	02	2.15	R1	G	RSA	D 2,915	$ 405,000	$ 351,600 02/22/2013	I	U	UNCLASSFYD EXCLUSION MALONEY LAWRENCE J	$ 0
7,960.000	000011	000045	000024	02	2.00	R1	F	RSA	D 3,241	$ 40	$ 318,400 02/22/2013	I	U	NON MARKET TRANSFER MANNOLINI NANCY S TRUS	$ 0
7,960.000	000011	000045	000024	02	2.00	R1	F	RSA	D 3,241	$ 40	$ 318,400 02/22/2013	I	U	BUSIN AFFIL GRNTR/E MANNOLINI VINCENT	$ 0
1.193	000018	000038	000000	02	1.49	R1	E	RSA	A 2,187	$ 200,000	$ 238,500 02/22/2013	I	U	QUICK SALE ST GEORGE REALTY TRUST	$ 0
1.511	000018	000034	000000	02	1.48	R1	E	RSA	A 1,672	$ 175,000	$ 264,500 02/27/2013	I	U	FAMILY/RELAT GRNTR/E POULIN, GARY L	$ 0
1.386	000010	000039	000000	02	0.77	R1	E	RSA	B 2,271	$ 170,100	$ 235,800 03/05/2013	I	U	FORECLOSURE STEFANILE, THOMAS A	$ 0
1.580	000005	000046	000000	02	2.03	R1	E	RSA	B 1,647	$ 147,500	$ 233,000 03/12/2013	I	U	FORECLOSURE PINARD, AARON R	$ 0
10,022.500	000011	000021	000003	01	1.22	R1	G	RSA	D 3,802	$ 40	$ 400,900 03/12/2013	I	U	NON MARKET TRANSFER OLSEN, ERIK J	$ 0
1.175	000012	000016	000011	02	2.07	R1	F	RSA	A 1,770	$ 211,933	$ 249,100 03/22/2013	I	U	QUICK SALE ST GEORGE REALTY TRUST	$ 0
1.312	000016	000007	000000	02	1.00	R1	E	RSA	D 3,392	$ 216,750	$ 284,300 03/22/2013	I	U	FORECLOSURE DALY MATTHEW T	$ 0
4,852.500	000009	000008	000000	03	0.60	R1	E	RSA	A 1,468	$ 40	$ 194,100 04/01/2013	I	U	NON MARKET TRANSFER WHITTAKER, RICHARD	$ 0
3.017	000003	000006	000009	02	0.00	R1	D	RSA	A 1,293	$ 28,600	$ 86,300 04/05/2013	I	U	NON MARKET TRANSFER HOLM, BERTHA P	$ 0
10,902.500	000008	000043	000006	02	2.02	R1	G	RSA	D 4,049	$ 40	$ 436,100 04/08/2013	I	U	NON MARKET TRANSFER SULLIVAN, JEFFREY P	$ 0

Ratio	Map	Lot	Sub	Zone	Acres	LC	NC	BR	SH Eff. Area	Sale Price	Assessment Sale Date	I	Q	Unqualified Description Grantor	Prior Year Assessment
0.798	000008	000029	000006	02	1.03	R1	H	RSA	D 3,399	$ 410,300	$ 327,400 05/03/2013	I	U	UNDER CONSTRUCTION CHESTER HILL LLC	$ 0
0.829	000008	000029	000007	02	0.77	R1	H	RSA	D 3,411	$ 434,900	$ 360,500 05/03/2013	I	U	UNDER CONSTRUCTION CHESTER HILL LLC	$ 0
2.368	000022	000003	000000	02	0.69	R1	E	RSA	C 1,647	$ 88,000	$ 208,400 05/13/2013	I	U	BANK FORECLSR SALE FEDERAL NATIONAL MORTG	$ 0
2.613	000025	000031	000000	02	0.50	R1	E	RSA	A 1,009	$ 64,000	$ 167,200 05/15/2013	I	U	BANK FORECLSR SALE GRANITE STATE CREDIT U	$ 0
2.468	000011	000019	000002	01	3.15	R1	F			$ 60,000	$ 148,100 05/16/2013	I	U	ESTATE SALE/FDCY COV GORDON, CIVITINA	$ 0
2.016	000016	000007	000000	02	1.00	R1	E	RSA	D 3,392	$ 141,000	$ 284,300 05/17/2013	I	U	BANK FORECLSR SALE JPMORGAN CHASE BANK	$ 0
34.412	000017	000084	000000	02	0.67	EX-M	E			$ 3,679	$ 126,600 05/17/2013	V	U	TAX SALE GRIMM, FRANK T	$ 0
233,800.000	000017	000003	000000	02	1.43	R1	E	RSA	A 1,863	$ 1	$ 233,800 05/22/2013	I	U	FAMILY/RELAT GRNTR/E BREAULT, JAMES L	$ 0

SECTION 7

PRELIMINARY SALES ANALYSIS SPREADSHEETS

PRELIMINARY SPREADSHEETS

The following pages show the spreadsheets used to develop preliminary base values for land and buildings.

Land only sales were used when available and adjusted for location, excess acreage and road frontage leaving a residual value of the base undeveloped site. Land only sales of 2 to 3 acres or less are selected when available to help eliminate any bias of excess acreage or road frontage as the value associated with them has yet to be determined and has to be estimated at this time.

When enough sales are available, and a preliminary base undeveloped site value can be established, then excess acreage and road frontage values can be developed by using other sales and deducting the base undeveloped site to extract an indicated preliminary value for acreage above the minimum lot size required for development. This can also be done for road frontage.

Once preliminary land values are determined, we can then develop the preliminary developed site value by using improved sales with relatively new homes, if available. This chart uses a building square foot cost estimate from local contractors and/or the national cost manual by Marshall & Swift.

Then a spreadsheet can be developed, using all the prior developed preliminary values for the developed site, excess land and road frontage to test the local contractor and cost manual information and confirm or alter the estimated building square foot cost to reflect the very specific local market.

Now with preliminary land and building values developed using the following spreadsheets, we can begin to analyze the impact of waterfront, water access and views, if any exist.

All this preliminary information is further tested via the final town wide sales analysis module for the CAMA system. These results are found in Section 9B of this manual.

AUBURN, NH
UNDEVELOPED 2 ACRE BUILDING SITE VALUE ANALYSIS

Trend %/Mnth= .0000% ESTIMATED EXCESS ACREAGE VALUE= $3,500

S #	Map & Lot	Address	Sale Date	Sale Price	Months to 4/1	Adjusted Sale Price	Acres	XS Acres Value	1 Acre Site Value	NHBD Adj.	Cond Adj.	Indicated Site Value
1	4-3-2	376 Spofford Rd	4/20/2012	$ 140,000	12	$ 140,000	2.159	$ 556	$ 139,444	1.05	1.00	$ 132,803
2	9-28-1-3	90 Cedar Crest	12/26/2012	$ 185,000	3	$ 185,000	3.131	$ 3,959	$ 181,042	1.30	0.90	$ 154,736
3	10-18-1	225 Hooksett Road	9/25/2012	$ 130,000	6	$ 130,000	2.064	$ 224	$ 129,776	1.00	0.95	$ 136,606
4	12-2-1	812 Hooksett Rd	6/5/2012	$ 145,000	10	$ 145,000	2.006	$ 21	$ 144,979	1.00	1.00	$ 144,979
5	12-18-3-1	21 Drouin Circle	9/10/2012	$ 208,800	6	$ 208,800	3.956	$ 6,846	$ 201,954	1.20	1.10	$ 152,995

AVERAGE
$ 144,424
MEDIAN
$144,979

SALES ADJUSTMENTS AND NOTES AS WELL AS DISCUSSION OF RESULTS

INDICATED PRELIMINARY AVERAGE UNDEVELOPED SITE VALUE IS $144,000

AUBURN, NH
DEVELOPED BASE SITE VALUE ANALYSIS

Trend %/Mth 0.000%

ESTIMATED $ PER SQUARE FOOT CO $62.00

Base Year 2013

Sale #	PID	Sale Date	Sale Price	Trend Mnths	Adj Price	Building Grade Rate	Building Year Built	Building Age Condtr	Building Normal Depre	Building Sq Ft	Building Value	Extra Features Value	Excess A & Rd Frnt Value	Land Residual Value	Location Adj	Site Conditio Topo A	Indicated Improved Site Value
1	2-3-56	1/29/2013	$ 340,352	2	$ 340,352	1.14330	2012	2.5	3	2,273	$ 156,287	$ 8,000	$ 0	$ 176,065	1.30	1.00	**$ 135,435**
2	2-3-58	1/14/2013	340000	2	$ 340,000	1.1544	2012	2.5	3	2375	$ 164,886	8000	0	$ 167,114	1.3	0.95	**$ 135,315**
3	2-9-29	4/1/2013	430800	0	$ 430,800	1.1641	2012	2.5	3	3359	$ 235,160	8000	0	$ 187,640	1.3	1	**$ 144,338**
4	5-43-1	3/28/2013	357000	0	$ 357,000	1.1291	2012	2.5	3	2502	$ 169,896	8000	0	$ 179,104	1.2	1	**$ 149,253**
5	5-43-9	3/28/2013	370600	0	$ 370,600	1.0798	2012	2.5	3	3098	$ 201,182	8000	0	$ 161,418	1.2	0.95	**$ 141,595**
6	5-69-7	10/24/2012	435133	5	$ 435,133	1.232	2012	2.5	3	3575	$ 264,881	8000	0	$ 162,252	1.2	1	**$ 135,210**
7	5-69-13	12/31/2012	463500	3	$ 463,500	1.1408	2012	2.5	3	3561	$ 244,312	8000	0	$ 211,188	1.3	1	**$ 162,452**
8	5-69-21	1/28/2013	487800	2	$ 487,800	1.1936	2012	2.5	3	3447	$ 247,436	8000	0	$ 232,364	1.3	1	**$ 178,741**
9	7-25-11	4/5/2013	$ 347,000		$ 347,000	1.03600	1999	2.0	7	3,159	$ 188,705	$ 8,000	$ 0	$ 150,295	1.20	1.00	**$ 125,246**
10	8-13-17	2/13/2012	$ 375,000	14	$ 375,000	1.10720	2005	2.0	6	3,712	$ 239,527	$ 3,000	$ 2,900	$ 129,573	1.05	1.00	**$ 123,403**
11	8-29-6	5/3/2013	$ 410,300		$ 410,300	1.12260	2013	2.5		3,111	$ 216,529	$ 8,000	$ 0	$ 185,771	1.30	0.97	**$ 147,320**
12	8-48-1	9/4/2012	$ 455,000	7	$ 455,000	1.21110	2010	2.5	4	3,352	$ 241,628	$ 3,000	$ 4,500	$ 205,872	1.30	1.00	**$ 158,363**

1=exc

1.5=v.good

2=good

2.5=ave

3=fair

4=poor

5=v.poor

AVERAGE
$ 144,723
MEDIAN
$ 142,967

INDICATED PRELIMINARY DEVELOPED SITE VALUE IS $144,000

AUBURN, NH
EXCESS ACREAGE VALUE ANALYSIS

Trend / Mnth %= .00% **BASE BUILDABLE SITE VALUE=** Average $144,424 Median $144,979

S #	Map/Lot	Address	Sale Date	Sale Price	Months T0 4/1	Adjusted Sale Price	NBHD Adj	Cond Adj	Site Value	XS Rd FF $	Residual Value	# of XS acres	Per Acre Value	Size Adj.	Topo Adj.	Indicated Acre Value
1	8-29	Dearborn Rd	10/25/12	$ 375,000	5	$ 375,000	1.05	2.00	$ 303,291	$ 0	$ 71,709	25.97	$ 2,761	0.87	0.90	$ 3,526
2	5-29	Pingree Hill	4/1/13	$ 356,000		$ 356,000	1.00	1.50	$ 216,636		$ 139,364	60	$ 2,323	0.77	0.95	$ 3,175
3	9-28-1	Hooksett Road	1/4/13	$ 465,000		$ 465,000	1.30	1.00	$ 187,751		$ 277,249	172	$ 1,612	0.51	0.90	$ 3,512

SALES NOTES AND ADJUSTMENTS GO HERE AND ANY DICUSSION ON RESULTS AND DICISSION

Average
$ 3,526

Median
$ 3,512

8-29 & 8-29-3 - Each lot provides one home site each with remaining acres as excess land

5-29 & 5-36 - 2 lot sale with $144.000 allocated for 5-36 as one house lot, remaining land lacks frontage and would require variance=1.75 modifier, used as excess acreage indicator

9-28-1 this is a industrial zoned lot with 3 acre site minimum, excess acreage derived less 3 acre site, court approved to develop residentially

INDICATED EXCESS ACREAGE PRELIMINARY VALUE IS = $3,500/ACRE

AUBURN, NH
RESIDENTIAL BUILDING SQUARE FOOT COST ANALYSIS

R22 for Avg R24 for Median

Trend %/Mth 0.0000% Depreciation Rate= 1 **Base developed site value= $ 142,967** **Base Year 2013**

Sale #	PID	Sale Date	Sale Price	Trend Mnths	Adj Price	Site ocatio Adj	Site Cond o opo Ad	Land Value	Extra Features Value	Excess Acs & Rd Frnt Value	Building Residual Value	Building Rate	Building Year Built	Building Age Condtn	Building Age Depre	Building Sq Ft	Indicated Bldg Sqr Ft Value
1	2-3-10	9/17/2012	$ 395,000		$ 395,000	1.30	1.00	$ 185,857	$ 8,900	$ 0	$ 200,243	1.121	2006	2.0	5	3,299	$ 57
2	2-3-30	7/3/2012	$ 404,000		$ 404,000	1.30	1.00	$ 185,857	$ 8,000	$ 0	$ 210,143	1.117	2011	2.5	4	3,199	$ 61
3	2-3-31	4/25/2012	$ 425,000		$ 425,000	1.30	1.00	$ 185,857	$ 9,000	$ 0	$ 230,143	1.199	2007	2.0	5	3,353	$ 60
5	2-3-62	2/29/2012	$ 440,200		$ 440,200	1.30	1.00	$ 185,857	$ 9,600	$ 0	$ 244,743	1.098	2011	2.5	4	3,511	$ 66
6	2-9-33	11/1/2012	$ 381,700		$ 381,700	1.30	1.00	$ 185,857	$ 8,000	$ 0	$ 187,843	1.133	2012	2.5	3	2,823	$ 61
7	5-2-8	2/1/2013	$ 239,900		$ 239,900	1.05	0.97	$ 145,612	$ 2,100	$ 0	$ 92,188	1.004	1985	2.5	14	1,862	$ 57
8	5-43-11	10/17/2012	$ 330,500		$ 330,500	1.20	1.00	$ 171,560	$ 5,000	$ 0	$ 153,940	1.145	2012	2.5	3	2,461	$ 56
9	5-43-15	9/10/2012	$ 395,000		$ 395,000	1.20	1.00	$ 171,560	$ 8,000	$ 0	$ 215,440	1.110	2012	2.5	3	3,307	$ 61
10	5-69-3	9/27/2012	$ 439,900		$ 439,900	1.20	1.00	$ 171,560	$ 8,000	$ 0	$ 260,340	1.221	2010	2.5	4	3,042	$ 73
11	5-69-30	4/27/2012	$ 347,800		$ 347,800	1.20	1.00	$ 171,560	$ 8,000	$ 0	$ 168,240	1.177	2012	2.5	3	2,381	$ 62
12	6-14-1	6/5/2012	$ 388,000		$ 388,000	1.00	1.00	$ 142,967	$ 3,000	$ 300	$ 241,733	1.157	2011	2.5	4	3,293	$ 66
13	8-29-7	5/3/2013	$ 434,900		$ 434,900	1.30	0.97	$ 180,281	$ 8,000	$ 0	$ 246,619	1.196	2013	2.5	0	3,411	$ 60
14	9-41	9/25/2012	$ 307,900		$ 307,900	1.00	1.00	$ 142,967	$ 3,000	$ 0	$ 161,933	1.094	2010	2.5	4	2,755	$ 56
16	11-56-17	12/17/2012	$ 286,000		$ 286,000	1.05	1.00	$ 150,115	$ 700	$ 0	$ 135,185	1.044	1995	2.0	8	2,409	$ 58

1=exc
1.5=v.good
2=good
2.5=ave
3=fair
4=poor
5=v.poor

AVERAGE
$ 61
MEDIAN
$ 60

INDICATED PRELIMINARY DEVELOPED SITE VALUE IS

SECTION 8

A. FIELD REVIEW

B. INFORMAL HEARING PROCESS

1. Number of Hearings

2. Results of Hearing

A. Field Review

Preliminary values were established based on the cost tables developed and tested via the statistical analysis. The statistical results and preliminary values were reviewed with the local authority, discussing neighborhoods, the sales basis for land and building cost tables, the preliminary sales charts, base values and resulting statistics of all sales along with graphs. A report of all preliminary values in town is also reviewed with the local authority showing the overall value of the town, as well as individual values for their comment.

Field Review

Then the job supervisor and one other assessor reviewed each parcel again for final "form and fit" testing. This review is generally done from the road or driveway checking the exterior to ensure the property structure, quality, condition and depreciation, as well as review the visible site, the lister's notes and picture of the property.

This is a slow, time consuming process that improves consistency from lot to lot and neighborhood to neighborhood, making all subjective considerations of one experienced supervisor. We find this extra effort improves the overall job quality and consistency.

When anomalies are noticed, another inspection is made to correct or verify the situation.

Property Specific Adjustment Guidelines

Land Adjustments

Undeveloped Land – Wooded Lot	No Adjustment
Undeveloped Land – Cleared Lot	No Adjustment
Commercial Use Not in C/I Zone	+25 to +900, depending on how extensive the use
Backland Only	-50 % for inaccessibility
Shared Driveway/Access (SHDW)	-5% or greater depending on size & impact
ROW Across Lot to Access Another	Varies – dependent upon access characteristics, typically -5 to -10%
Topography (TOPO)	Varies – dependent upon severity
Less Than Average Access (ACC)	Varies – dependent upon severity
Cost to Develop (CTD)	Varies – determined by field review
Not Buildable (NBD)	-90% (10 Land Condition)
In-Law Apartment/2 Family/3 Family	+0% (100 Land Condition) No Adjustment
4 Family Dwelling	+10% (110 Land Condition)
Current Use Wetlands	-90 (10 Land Condition)

Building Adjustments

Wall Height (WH) -1% to -3% Dependent on Severity

This adjustment is typically seen on gambrel style dwellings as there is a loss in space in the upper floor due to the pitch of the roof.

Close to Road (CTR) -5%

This adjustment is applied to homes that are abnormally close to the road.

Dirt Basement (DB) -1% or greater depending on severity

Low Basement (LB) -1% or greater depending on severity

A basement with low headroom (less than 5')

Wet Basement (WB) -1% or greater depending on severity

Highway (HWY)	-5 to -10% depending on proximity, sometimes adjusted for location (LOC)

For proximity to the highway/highway noise on Route 101

Utilities	-5% per utility

Lacking electricity, water or septic

No Parking Available	-5 to -15% depending on severity
Misc/CNotes	Varies

Buildings require depreciation for many items. The overall condition of the home usually accounts for the majority of normal wear and tear items but often depreciation is needed to account for issued that are short lived and have a cost to cure associated with them, ie roof and siding.

Land Restr	-25%

These properties are affected by the land lease with Manchester Water Works.

Common Wall Interior Unit (CWI)	-4%

In units that have a common wall between them, typically used in commercial office and/or condo spaces.

B. Informal Hearing Process

The informal hearing process begins with a notice of preliminary value and information on how to make an appointment to review the assessment one on one being mailed first class on: June 7, 2013.

Sample notice can be found in Section 5. Abbreviations & Samples

The property owners were given 3 days, starting Monday, June 17, 2013 between the hours of 8:00 am & 4:30 pm to call and arrange an appointment.

The hearings were held for 2 days from 6/24/13 to 6/26/13 and resulted in 30 taxpayers calling to set up appointments to discuss their assessments.

If they were unable to fit into the normal 8-5 P.M. schedule, their name and phone number were taken and once the appointment period was over, all property owners on this list were contacted and arrangements for evening or Saturday meetings were made.

Once all the informal hearings are complete, the supervisor reviews all the information and recommendations from the hearing officer and makes final changes and produces the final statistical results and graphs.

The hearings went smoothly and gave us an opportunity to correct any physical data, as well as complete any interior inspections of properties that had not previously been inspected.

SECTION 9

A. CALIBRATION TECHNIQUE

B. FINAL STATISTICAL ANALYSIS & TESTING

C. FINAL VALUATION COST TABLES

A. MODEL CALIBRATION TECHNIQUE

Once all the local sales data has been verified via onsite measure and list of all buildings and land information, the sale date, price and circumstances are verified by the appraisal supervisor via owner interview, questionnaire, PA-34 or prior owner/real estate agent interview.

That data is then used to develop preliminary costs for land and building tables needed for the CAMA system to calculate assessment values for all property in the municipality once the rest of the properties are measured and listed.

When the CAMA cost tables are defined, we compute the assessment to sales ratio for each property and produce graphs and reports which can then be used to calibrate the CAMA system to predict the market value of all property in the municipality as fairly as possibly. The following are samples of the graphs used to test and calibrate the CAMA model through multiple reiterations of the sales analysis program:

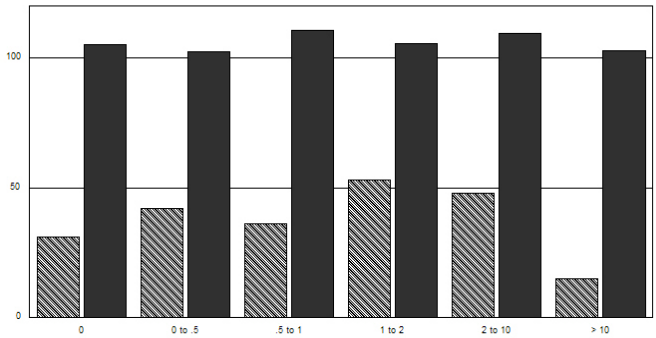

The hashed bars indicate the number of sales in each group, while the solid bars indicate the median assessment to sales ratio. This graph charts ratios for various lot sizes of the sales data and enables us to determine if all lots are fairly assessed regardless of size.

	# of Parcels	Median A/S x 100
0	31	105.32
0 to .5	42	102.70
.5 to 1	36	110.83
1 to 2	53	105.63
2 to 10	48	109.44
> 10	15	102.90

Here the groups, number of sales in each group and the median ratio are displayed.

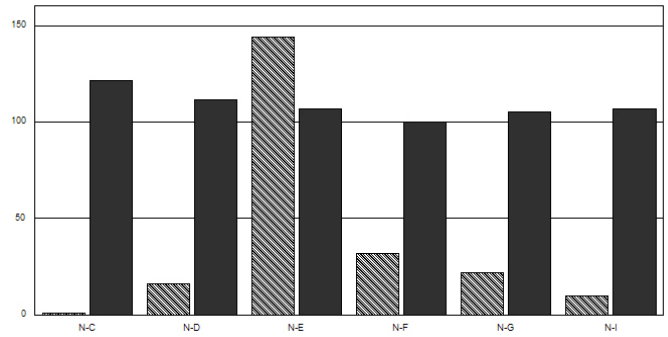

The sales are charted by neighborhood designation to test if there is a neighborhood bias. This sample chart indicates that neighborhood "C" is being significantly over assessed; "D" is slightly over assessed, while the other neighborhoods are fairly evenly assessed. However, neighborhood "C" has only one sale and as such, is not a clear indication of a model bias and is disregarded.

	# of Parcels	Median A/S x 100
N-C	1	121.60
N-D	16	111.66
N-E	144	106.63
N-F	32	99.78
N-G	22	105.37
N-I	10	106.92

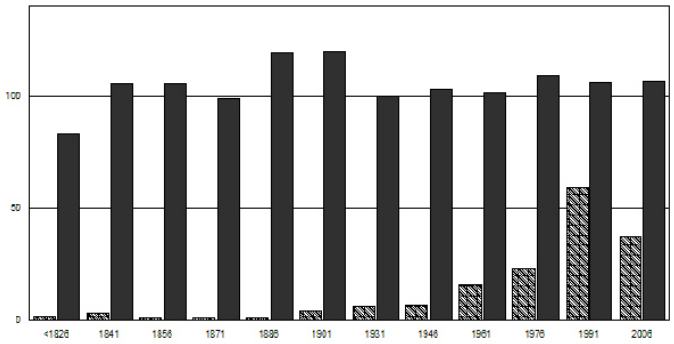

	# of Parcels	Median A/S x 100
<1826	2	82.90
1841	3	105.37
1856	1	105.37
1871	1	99.06
1886	1	119.15
1901	4	120.16
1931	6	100.09
1946	7	103.06
1961	16	101.20
1976	23	108.83
1991	59	106.49
2006	37	106.91

This graph is charting building age groups and their median ratio to see if the depreciation schedule is working across all age groups.

It is important to note the number of sales in each group. In this chart, the 1886 group seems to show an over assessment, but it is only one sale and as such, is not as meaningful. However, the 1901 group has four sales with a high ratio and may indicate a problem.

Sales Ratio Bar Graphs

Median Assessment/Sales Ratio by Year of Construction: This is a comparison of sale to assessment grouped by year of construction. This shows that effect, if any, of age on the median assessment ratio of various age groupings. It is used to help test that the depreciation used for normal age is consistently and equitably working across all ages of the sales.

Median Assessment/Sales Ratio by Effective Area: This graph is a test of the effect of size of the building and its impact on our valuation model. It is used to calibrate, as well as show whether or not the size adjustment scale is effectively working with small buildings, as well as large buildings.

Median Assessment/Sales Ratio by Story Height: This graph normally shows two to four groups based on the number of different story heights in the sales sample and demonstrates the effect of multiple floors on sales. It is used to test and calibrate story height adjustments to ensure our adjustment by story heights is working.

Distribution of Sales Ratio: This shows the clustering of sales around our median ratio. The majority of sales should be at or near 1, which is actually 100% and taper off in both directions, below and above the 100% level indicating a normal distribution of sales ratios.

Median Assessment/Sales Ratio by Sale Price: We tested our computed values to actual sales values as in all these graphs, but here we are testing to see if there is a bias between low and high values by graphing the median ratio of value groups - low to high. It is used to test if a bias exists by value.

Median Assessment/Sales Ratio by Neighborhood: This graph tests our neighborhood delineation to ensure that our neighborhood codes are fair and equitable. With a median ratio of all groups as close to 100% as possible, this demonstrates a good neighborhood delineation.

Median Assessment/Sales Ratio by Zone: If there is more than one zoning district in a town and sales exist in more than one zone, the chart will show the median ratio for each zone to test for a zoning bias and to re-calibrate, if necessary, to reflect a reasonable relationship through all zones based on the median ratio.

Median Assessment/Sales Ratio by Acreage: This graph is used to test and calibrate the value difference of various size lots. The chart shows the median ratio by various lot size groupings of the sales data.

Median Assessment/Sales Ratio by Use: This graph shows the median ratio of various groups of land use within the sales data. It is used to calibrate the CAMA model to effectively treat each use fairly at similar assessment to sales ratios.

Median Assessment/Sales Ratio by Building Grade: This graph helps test the effect of building quality of construction adjustments by showing the median ratio for each grade classification within the sales sample.

As the true value of any property falls within a range of the most likely low to the most likely high value, these bar charts should show a relatively straight line. Rarely will it ever be a straight line. It is intended to show whether or not a strong measurable and correctable *bias* exists. As long as there is no trend up or down from the lowest to the highest grouping, then what bias exists, is negligible. In other words, everyone is being treated the same.

However, it is important to note that 1 or even 2 sales do not provide definitive information as to whether a bias exists or not. As such, it is possible for a graph with a group of only 1 or 2 sales to show a spike or drop compared to the rest. And while it is an indication of possible bias, it is not conclusive enough to assume any type of corrective action and as such, in mass appraisal it is documented in these graphs for future monitoring, but does not necessarily affect the overall results of the revaluation program.

All these graphs enable the CAMA model to be tested beyond the standard statistics as required by the DRA and the ASB guidelines to show equity within various categories to ensure the most equitable assessments possible.

SECTION 9

B. FINAL STATISTICAL ANALYSIS REPORTS

Sales Analysis Results

Auburn -- 07/11/2013

Sales Analysis Statistics			
Number of Sales:	**81**	Mean Sales Ratio:	**0.9979**
Minimum Sales Ratio:	**0.8322**	Median Sales Ratio:	**0.9919**
Maximum Sales Ratio:	**1.1585**	Standard Deviation:	**0.0651**
Aggregate Sales Ratio:	**0.9900**	Coefficient of Dispersion:	**4.8955**
		Price Related Differential:	**1.0079**

Sales Analysis Criteria	
Sold: 01/01/2012 - 07/11/2013	Sale Ratios: 0.000 - 999.999
Building Value: 0 - 99999999	Bldg Eff. Area: 0 - 99999999
Land Value: 0 - 99999999	Land Use: ALL
Current Use CR: 0 - 99999999	Acres: 0 - 99999999
Year Built: 1600 - 2013	Trend: 0.000% Prior to 07/11/2013
Story Height: ALL	Neighborhood: ALL
Base Rate: ALL	Zone: ALL
Qualified: YES	Unqualified: NO
Improved: YES	Vacant: YES
View: All	Waterfront: All
Include Comm./Ind./Util.: YES	

Auburn:Median A/S Ratio by Sale Price

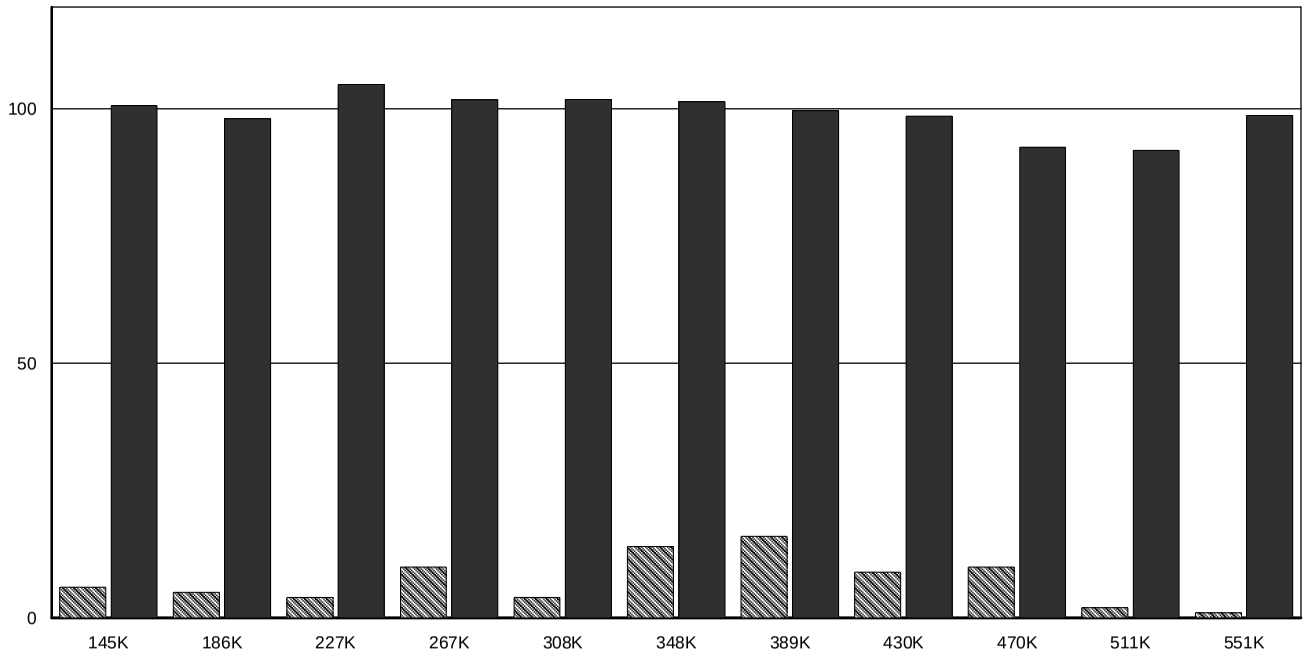

	# of Parcels	Median A/S x 100
145K	6	100.63
186K	5	98.05
227K	4	104.78
267K	10	101.79
308K	4	101.86
348K	14	101.37
389K	16	99.59
430K	9	98.54
470K	10	92.47
511K	2	91.85
551K	1	98.69

Auburn:Median A/S Ratio by Neighborhood

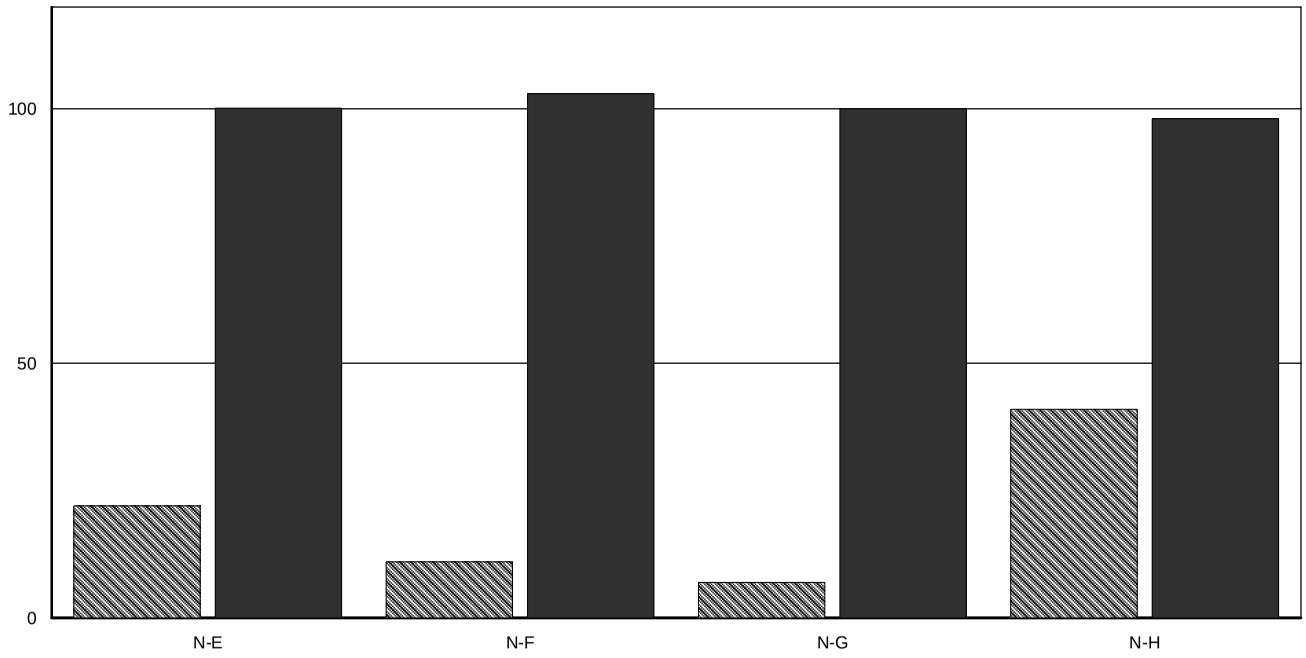

	# of Parcels	Median A/S x 100
N-E	22	100.10
N-F	11	102.96
N-G	7	99.97
N-H	41	98.05

Auburn:Median A/S Ratio by Zone

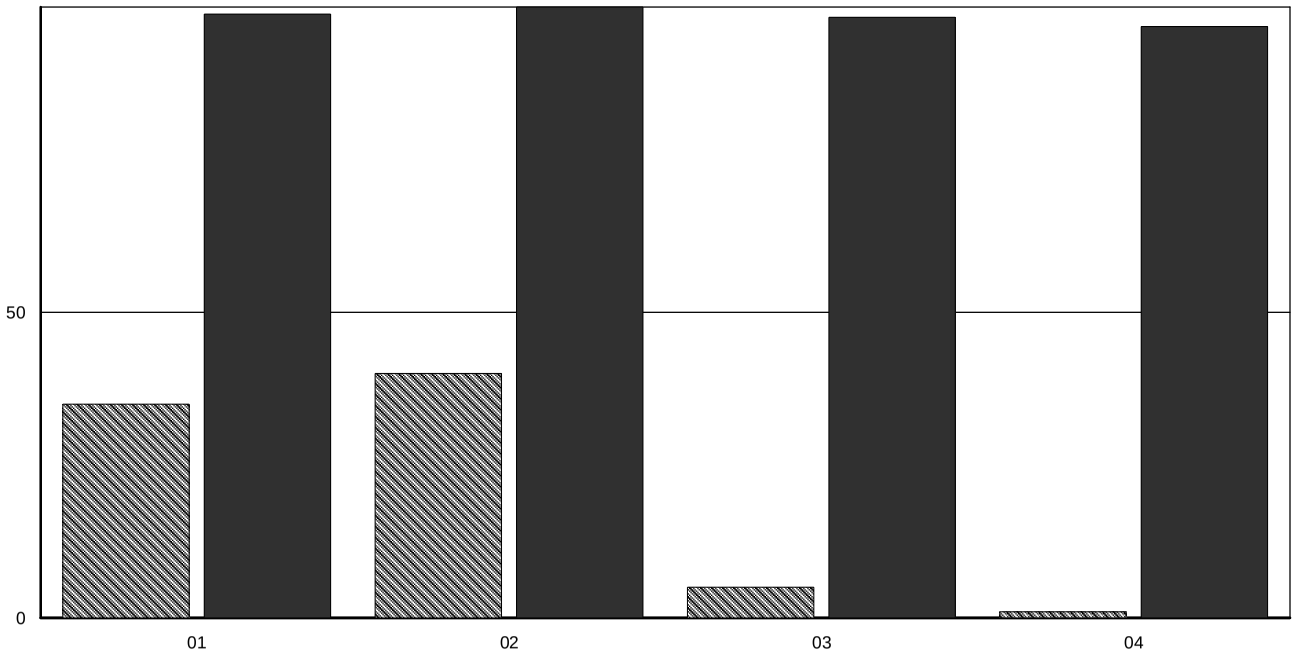

	# of Parcels	Median A/S x 100
01	35	98.86
02	40	99.99
03	5	98.31
04	1	96.80

Auburn:Median A/S Ratio by Acreage

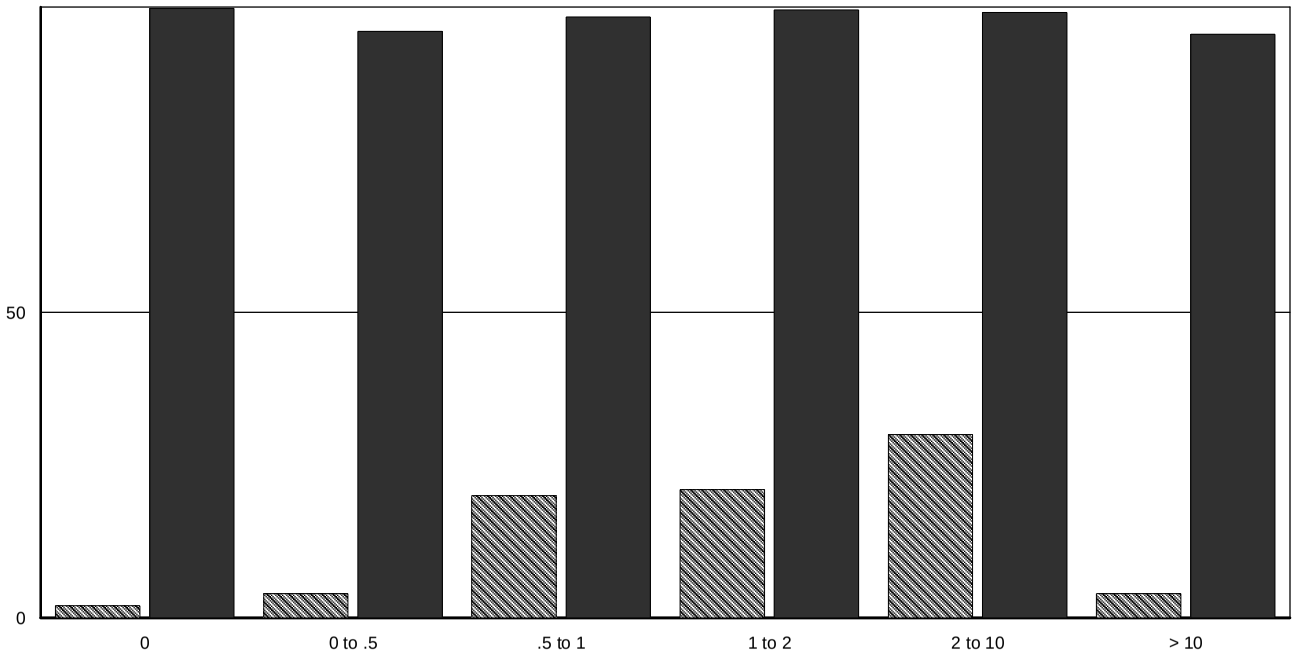

	# of Parcels	Median A/S x 100
0	2	99.78
0 to .5	4	96.01
.5 to 1	20	98.38
1 to 2	21	99.55
2 to 10	30	99.09
> 10	4	95.56

Auburn:Median A/S Ratio by Improved Use

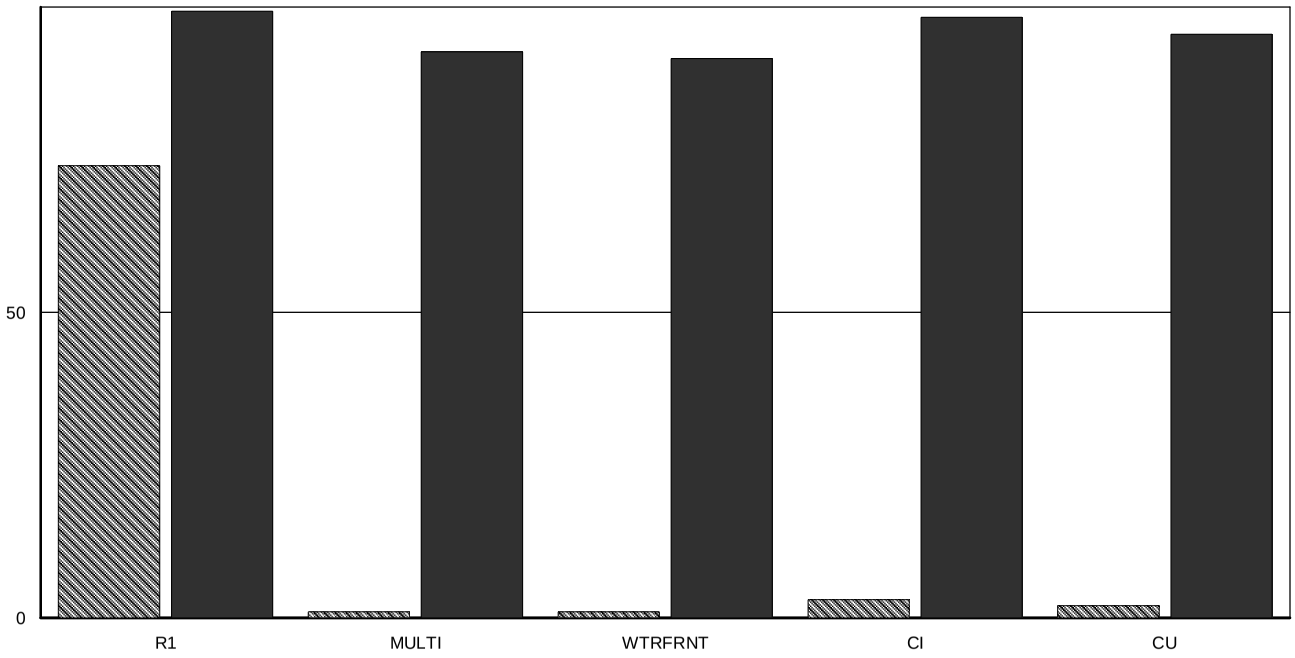

	# of Parcels	Median A/S x 100
R1	74	99.30
MULTI	1	92.66
WTRFRNT	1	91.55
CI	3	98.31
CU	2	95.56

Auburn:Median A/S Ratio for Views/Waterfront/Other

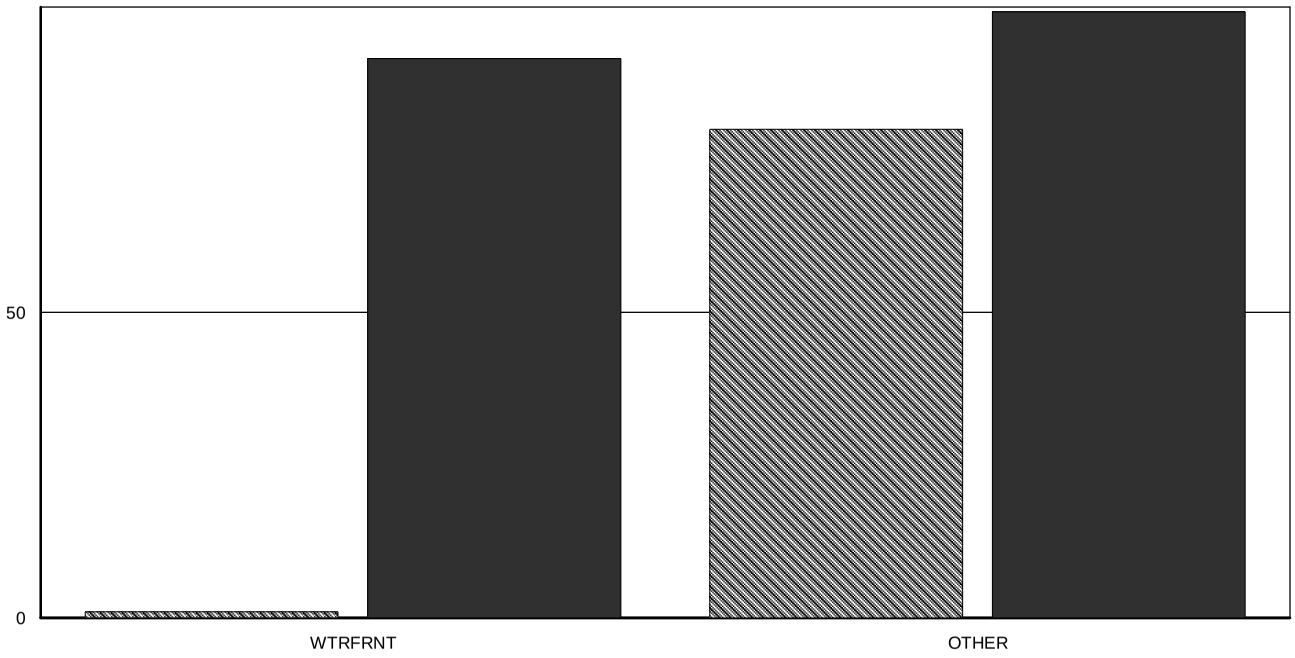

	# of Parcels	Median A/S x 100
WTRFRNT	1	91.55
OTHER	80	99.20

Sales Analysis Results

Auburn -- 07/11/2013

Sales Analysis Statistics			
Number of Sales:	**9**	Mean Sales Ratio:	**0.9758**
Minimum Sales Ratio:	**0.8322**	Median Sales Ratio:	**0.9805**
Maximum Sales Ratio:	**1.0843**	Standard Deviation:	**0.0733**
Aggregate Sales Ratio:	**0.9612**	Coefficient of Dispersion:	**5.2260**
		Price Related Differential:	**1.0151**

Sales Analysis Criteria	
Sold: 01/01/2012 - 07/11/2013	Sale Ratios: 0.000 - 999.999
Building Value: 0 - 99999999	Bldg Eff. Area: 0 - 99999999
Land Value: 0 - 99999999	Land Use: ALL
Current Use CR: 0 - 99999999	Acres: 0 - 99999999
Year Built: 1600 - 2013	Trend: 0.000% Prior to 07/11/2013
Story Height: ALL	Neighborhood: ALL
Base Rate: ALL	Zone: ALL
Qualified: YES	Unqualified: NO
Improved: NO	Vacant: YES
View: All	Waterfront: All
Include Comm./Ind./Util.: YES	

Auburn Sales Analysis Report

Ratio	Map	Lot	Sub	Zone	Acres	LC	NC	BR	SH Eff. Area	Sale Price	Assessment Sale Date	I	Q	Unqualified Description Grantor	Prior Year Assessment
1.084	000004	000003	000002	02	2.16	R1	F	RSA	C 2,570	$ 140,000	$ 151,800 04/20/2012	V	Q	WILSON RALPH H	$ 0
0.993	000012	000002	000001	02	2.01	R1	E	RSA	C 3,875	$ 145,000	$ 144,000 06/05/2012	V	Q	THOMAS JAMES	$ 0
0.927	000012	000018	0003-1	02	3.96	R2	G	RSA	A 5,940	$ 208,833	$ 193,500 09/10/2012	V	Q	DROUIN REJEAN AS TRUST	$ 0
1.054	000010	000018	000001	02	2.06	R1	E			$ 130,000	$ 137,000 09/25/2012	V	Q	ZYLA WILLIAM P	$ 0
0.981	000009	000028	001-13	02	3.13	R1	H			$ 185,000	$ 181,400 12/26/2012	V	Q	TENN SYLVIA C	$ 0
0.968	000009	000028	000001	04	186.41	CUUO	E			$ 465,000	$ 450,100 01/04/2013	V	Q	TENN JAMES	$ 0
0.832	000008	000048	0001-3	02	13.56	R1	H	RSA	D 3,420	$ 250,666	$ 208,600 02/21/2013	V	Q	MAVERICK DEVELOPMENT C	$ 0
0.943	000005	000029	000000	02	62.00	CUUO	E			$ 360,000	$ 339,600 04/01/2013	V	Q	GARABEDIAN, CHARLES	$ 0
1.000	000005	000036	000000	02	1.00	R1	E			$ 140,000	$ 140,000 04/01/2013	V	Q	GARABEDIAN, CHARLES P.	$ 0

Auburn:Distribution of Sale Ratios

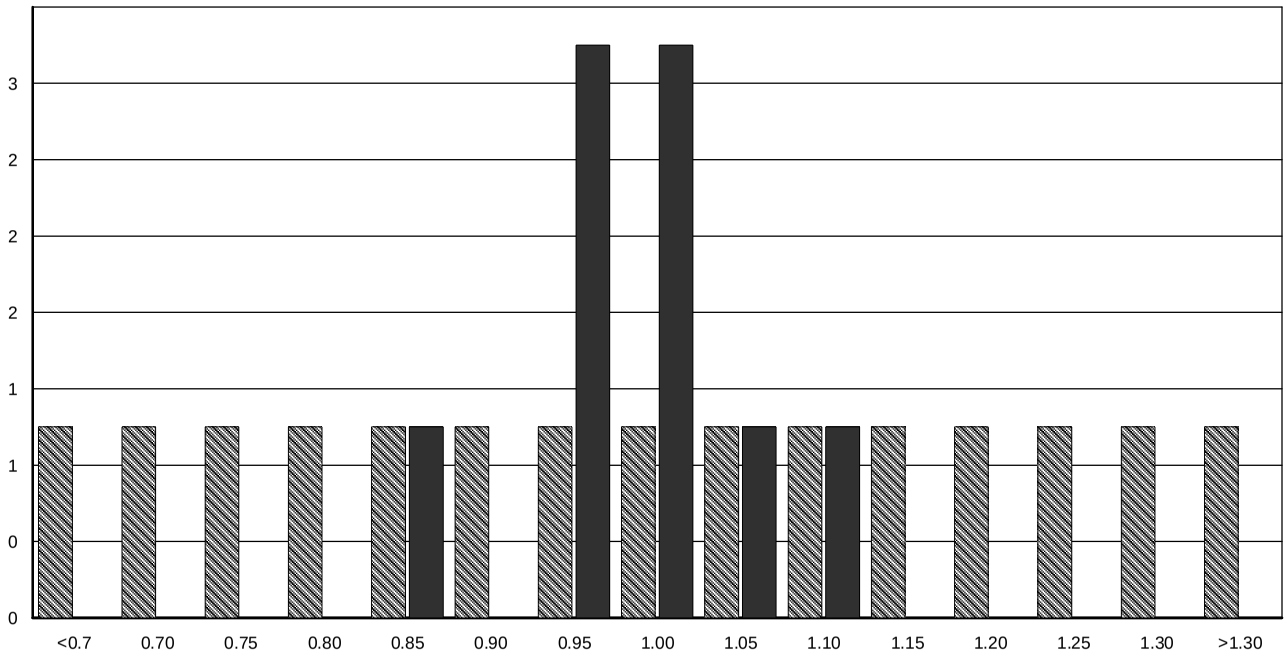

Auburn:Median A/S Ratio by Sale Price

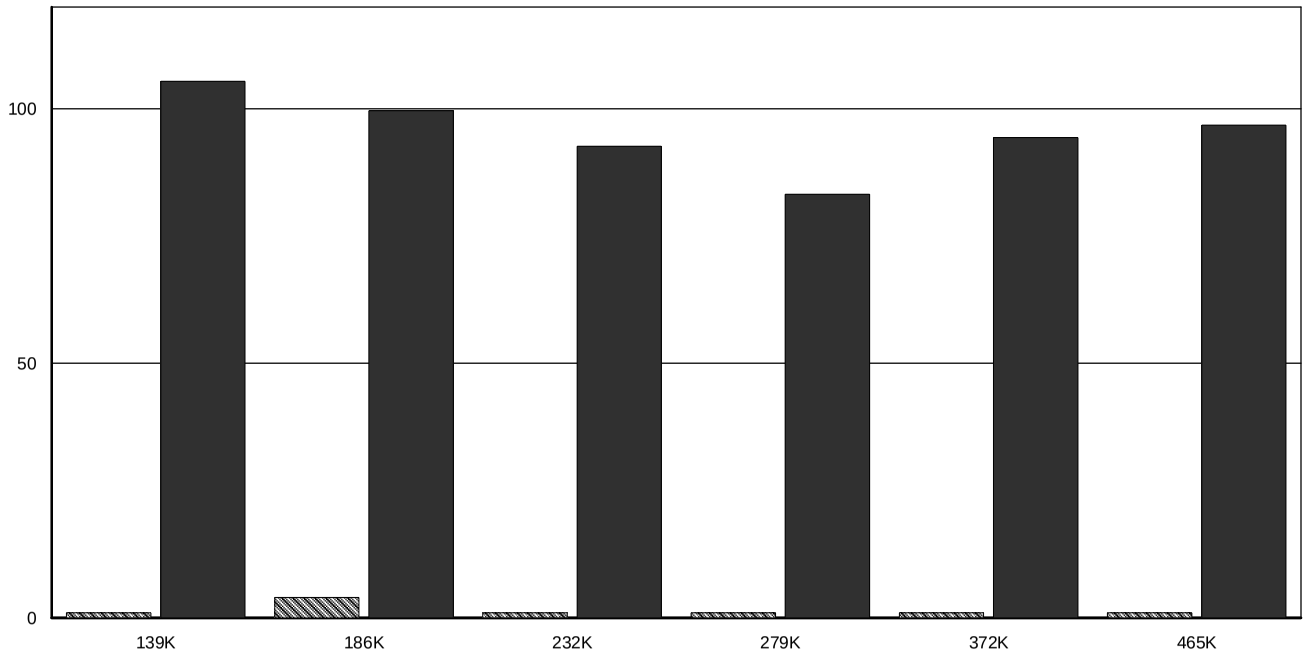

	# of Parcels	Median A/S x 100
139K	1	105.38
186K	4	99.66
232K	1	92.66
279K	1	83.22
372K	1	94.33
465K	1	96.80

Auburn:Median A/S Ratio by Neighborhood

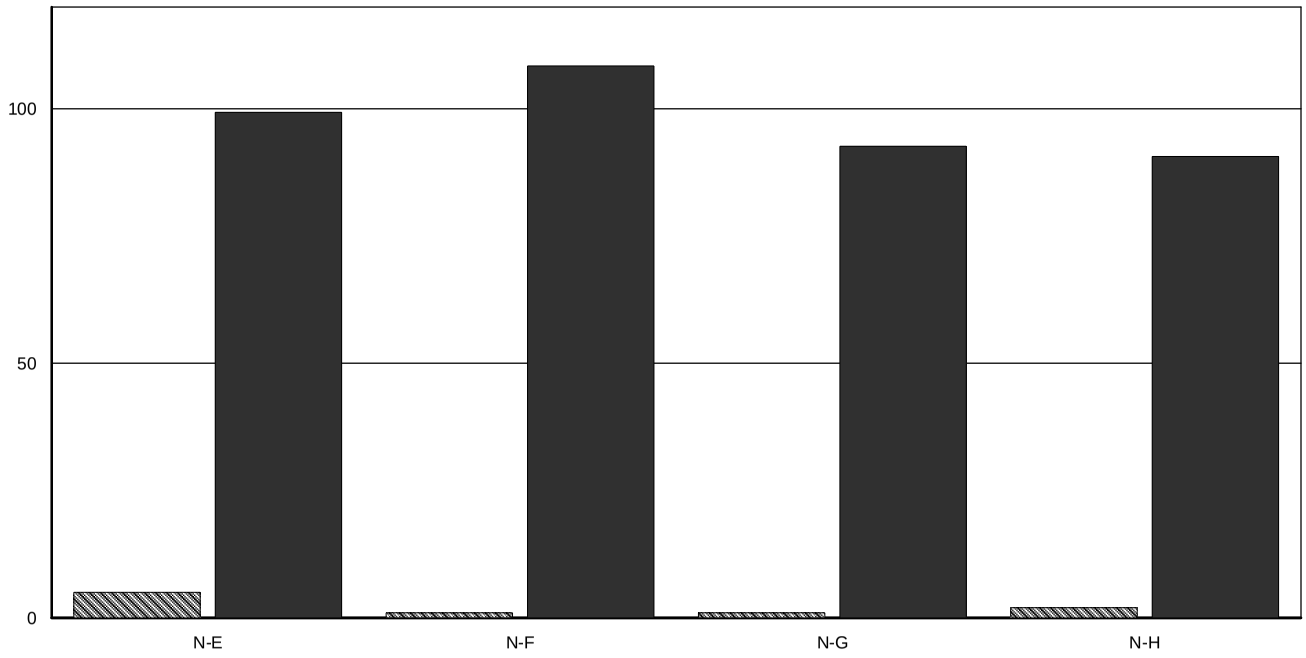

	# of Parcels	Median A/S x 100
N-E	5	99.31
N-F	1	108.43
N-G	1	92.66
N-H	2	90.64

Auburn:Median A/S Ratio by Zone

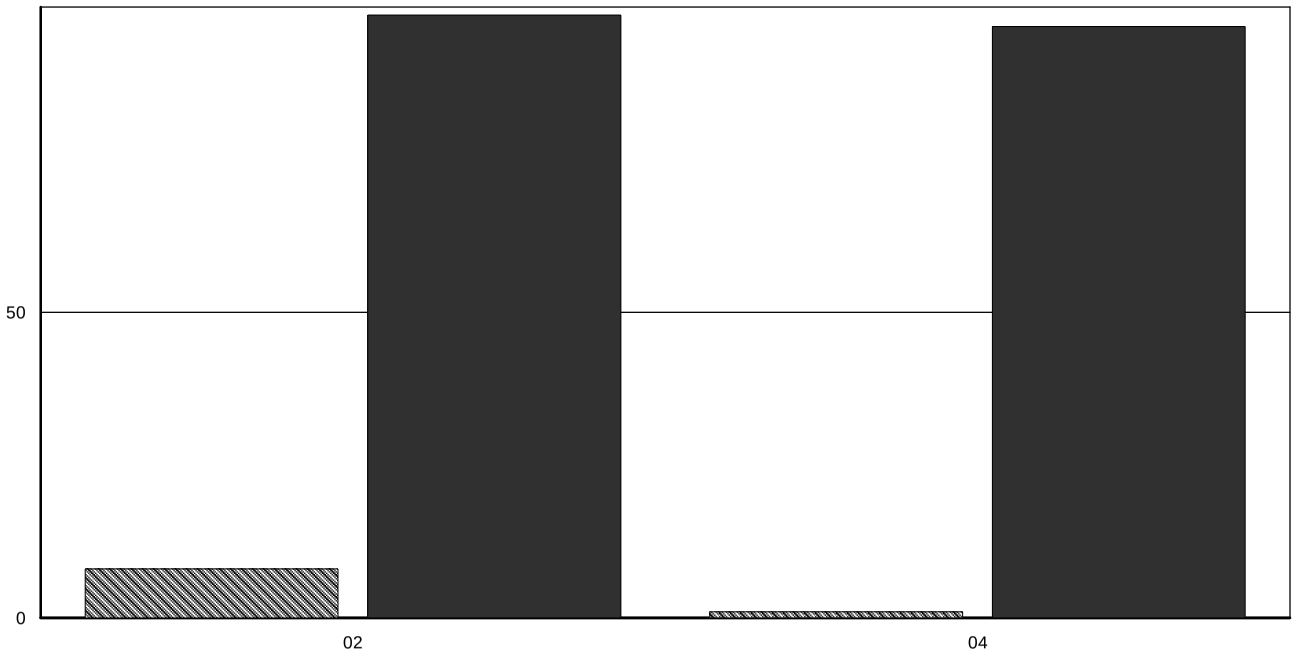

	# of Parcels	Median A/S x 100
02	8	98.68
04	1	96.80

Auburn:Median A/S Ratio by Acreage

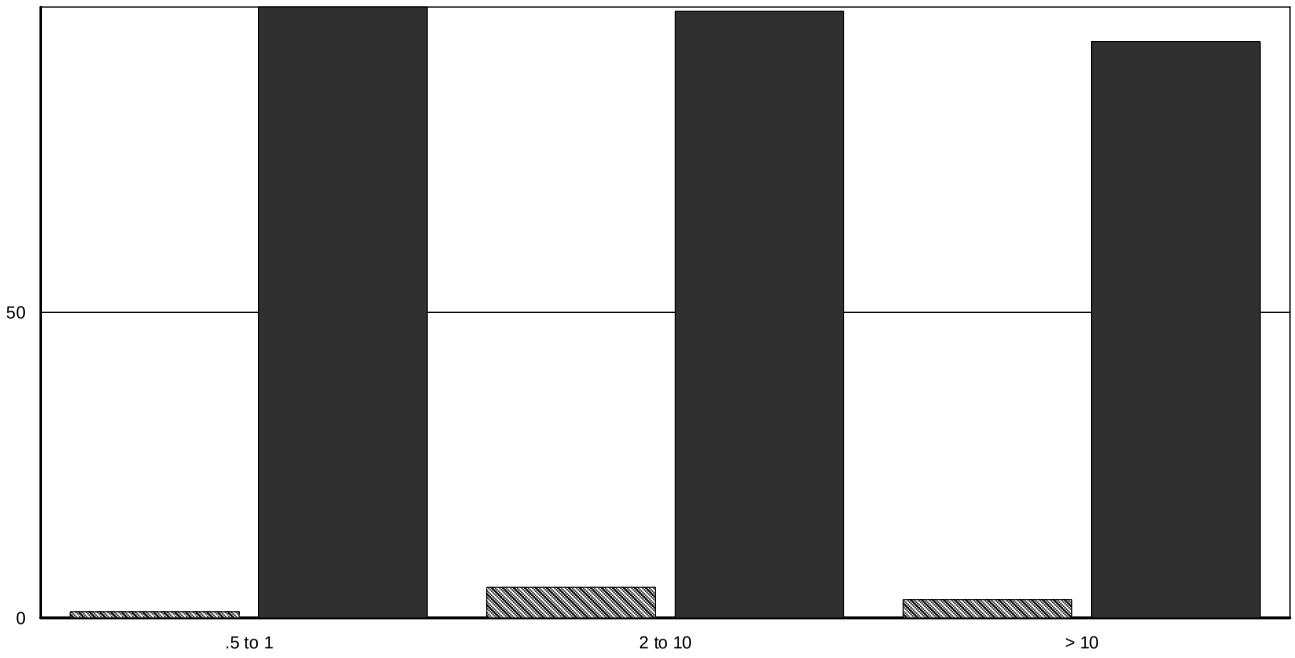

	# of Parcels	Median A/S x 100
.5 to 1	1	100.00
2 to 10	5	99.31
> 10	3	94.33

Auburn:Median A/S Ratio for Views/Waterfront/Other

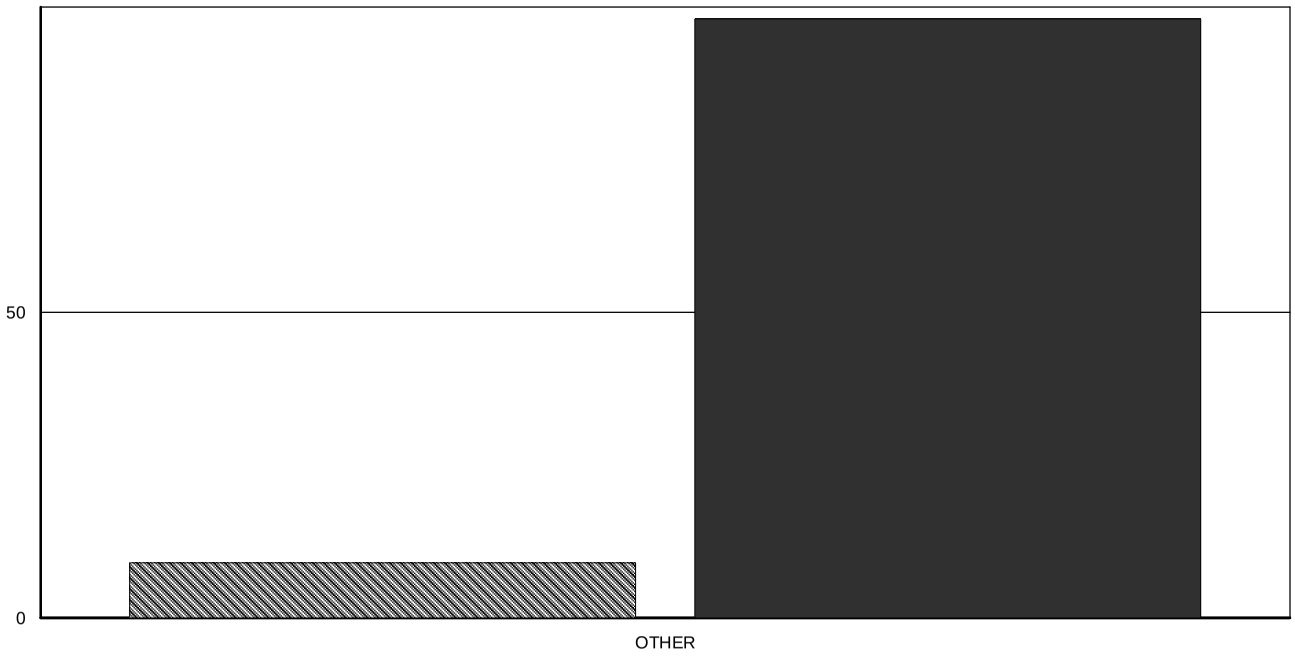

	# of Parcels	Median A/S x 100
OTHER	9	98.05

OWNER INFORMATION

CASE JOHN B & JENNY G TRUSTEES
OF THE JOHN B CASE & JENNY G J
205 ELGIN AVE

MANCHESTER, NH 03104

SALES HISTORY

Date	Book	Page	Type	Price	Grantor
08/20/2012	5347	1140	U V 44	40	CASE JOHN B
04/20/2012	5308	1108	Q V	140,000	WILSON RALPH H

PICTURE

LISTING HISTORY

03/18/13	CRVL
04/01/12	LMSL

NOTES

MINT; 3/13 HICKORY FLRS,R40 WALLS-RSS ROOF, ENERGY EFFICIENT HOME-BUILT TO VERY HIGH EFFICIENCY GREEN HOME;

EXTRA FEATURES VALUATION

Feature Type	Units	Lngth x Width	Size Adj	Rate	Cond	Market Value	Notes

MUNICIPAL SOFTWARE BY AVITAR

AUBURN ASSESSING OFFICE

PARCEL TOTAL TAXABLE VALUE

Year	Building	Features	Land
2013	**$ 166,800**	**$ 0**	**$ 151,800**
		Parcel Total:	**$ 318,600**

LAND VALUATION

Zone: RESIDENTIAL 1 & 2 **Minimum Acreage:** 2.00 **Minimum Frontage:** 200 **Site:** AVERAGE **Driveway:** PAVED **Road:** PAVED

Land Type	Units	Base Rate	NC	Adj	Site	Road	DWay	Topography	Cond	Ad Valorem	SPI	R	Tax Value	Notes
1F RES	2.000 ac	144,000	F	105	100	100	100	100 -- LEVEL	100	151,200	0	N	151,200	
1F RES	0.159 ac	x 3,500	X	100				100 -- LEVEL	100	600	0	N	600	
	2.159 ac									151,800			**151,800**	

PICTURE

OWNER

CASE JOHN B & JENNY G TRUSTEES
OF THE JOHN B CASE & JENNY G J
205 ELGIN AVE

MANCHESTER, NH 03104

TAXABLE DISTRICTS

District	Percentage

PERMITS

Date	Permit ID	Permit Type	Notes
03/28/13	13-161	WOODSTOVE	
06/14/12	12-238	NEW HOME	UNFINISHED BASEMENT

BUILDING DETAILS

Model: **1.75 STORY FRAME SALTBOX**
Roof: **GABLE OR HIP/ASPHALT**
Ext: **CEDAR/REDWD/CLAP BOARD**
Int: **DRYWALL**
Floor: **HARDWOOD**
Heat: **ELECTRIC/HEAT PUMP**
Bedrooms: **3** Baths: **2.5** Fixtures: **9**
Extra Kitchens: Fireplaces:
A/C: **Yes 100.00 %** Generators: **1**
Quality: **A2 AVG+20**
Com. Wall:
Size Adj: **0.9640** Base Rate: **RSA 60.00**
Bldg. Rate: **1.2017**
Sq. Foot Cost: **$ 72.10**

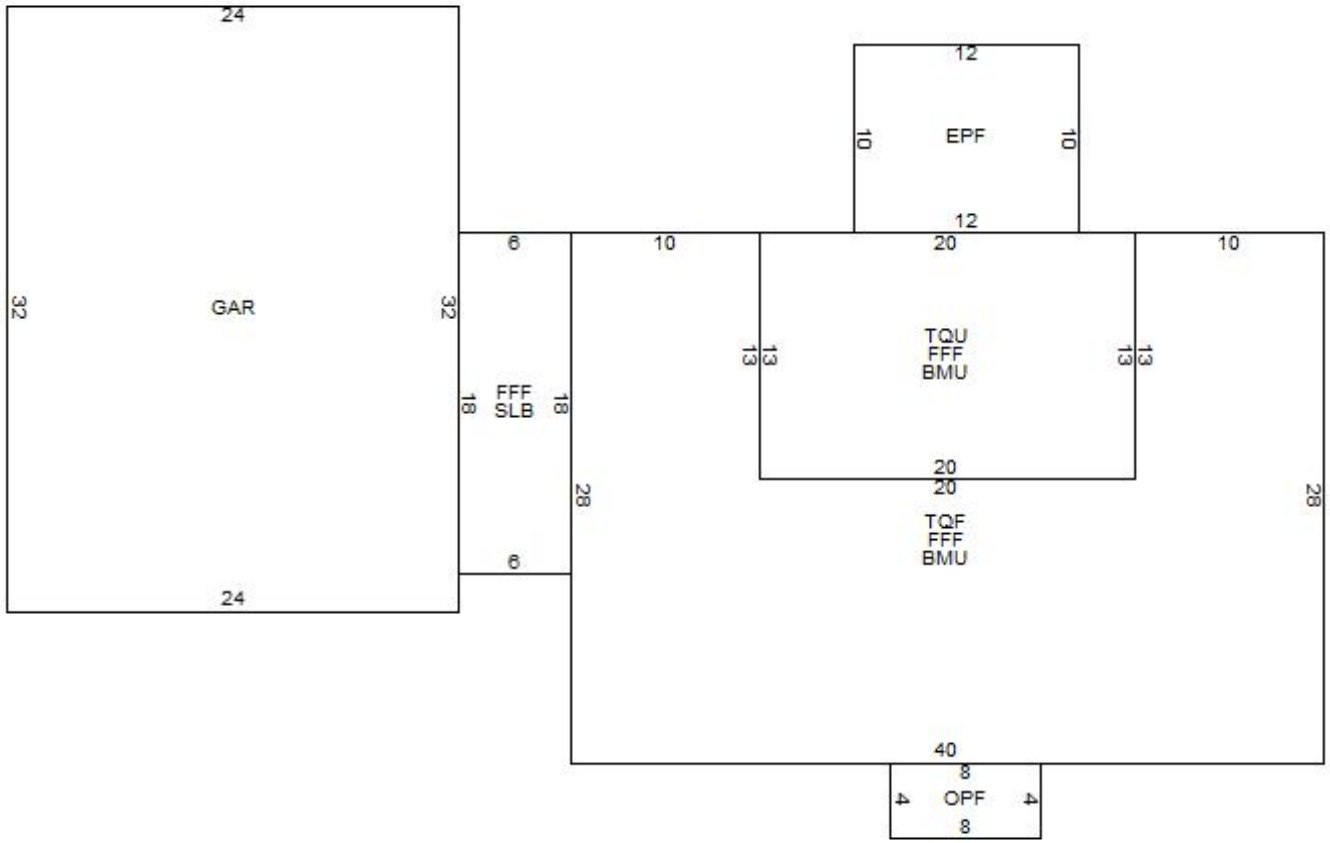

BUILDING SUB AREA DETAILS

ID	Description	Area	Adj.	Effect.
TQF	3/4 STRY FIN	860	0.75	645
GAR	GARAGE	768	0.45	346
FFF	FST FLR FIN	1228	1.00	1228
SLB	SLB	108	0.00	0
BMU	BSMNT	1120	0.15	168
OPF	OPEN PORCH	32	0.25	8
TQU	3/4 STRY UNFIN	260	0.35	91
EPF	ENCLSD PORCH	120	0.70	84
GLA:	**1,873**	**4,496**		**2,570**

2013 BASE YEAR BUILDING VALUATION

Market Cost New:		**$ 185,297**
Year Built:		**2012**
Condition For Age:	AVERAGE	**2 %**
Physical:		
Functional:		
Economic:		
Temporary:	UC	**8 %**
Total Depreciation:		**10 %**
Building Value:		**$ 166,800**

OWNER INFORMATION

MAVERICK DEVELOPMENT CORP

PO BOX 10833

BEDFORD, NH 03110

SALES HISTORY

Date	Book	Page	Type	Price	Grantor
04/01/2013	5424	12	Q V	360,000	GARABEDIAN,

PICTURE

LISTING HISTORY

03/15/13 CRVL
12/12/02 JDRL

NOTES

VACANT; WOODED; ROLLING TOPO;ROW ACCESS;4/13 SALE PRICE=$500,000 WITH 5/36, $360K ALLOCATED TO THIS PARCEL-BEST SITE MODOFIER TO ACCOUNT/ADJ FOR APPROVALS IN PLACE

EXTRA FEATURES VALUATION

Feature Type	Units	Lngth x Width	Size Adj	Rate	Cond	Market Value	Notes

MUNICIPAL SOFTWARE BY AVITAR

AUBURN ASSESSING OFFICE

PARCEL TOTAL TAXABLE VALUE

Year	Building	Features	Land
2011	$ 0	$ 0	$ 6,832
		Parcel Total:	$ 6,832
2013	**$ 0**	**$ 0**	**$ 2,815**
		Parcel Total:	**$ 2,815**

LAND VALUATION

Zone: RESIDENTIAL 1 & 2 **Minimum Acreage:** 2.00 **Minimum Frontage:** 200 **Site:** BEST **Driveway:** **Road:** PAVED

Land Type	Units	Base Rate	NC	Adj	Site	Road	DWay	Topography	Cond	Ad Valorem	SPI	R	Tax Value	Notes
UNMNGD OTHER	2.000 ac	144,000	E	100	125	100	100	100 -- LEVEL	100		90	N	91	
UNMNGD OTHER	60.000 ac	x 3,500	X	76				100 -- LEVEL	100		90	N	2,724	
	62.000 ac												**2,815**	

PICTURE

OWNER

MAVERICK DEVELOPMENT CORP

PO BOX 10833

BEDFORD, NH 03110

TAXABLE DISTRICTS

District	Percentage

PERMITS

Date	Permit ID	Permit Type	Notes

BUILDING DETAILS

Model:
Roof:
Ext:
Int:
Floor:
Heat:
Bedrooms: Baths: Fixtures:
Extra Kitchens: Fireplaces:
A/C: Generators:
Quality:
Com. Wall:
Stories:
Base Type:

BUILDING SUB AREA DETAILS

2013 BASE YEAR BUILDING VALUATION

Year Built:
Condition For Age: %
Physical:
Functional:
Economic:
Temporary:
%

OWNER INFORMATION

MAVERICK DEVELOPMENT CORP

PO BOX 10833

BEDFORD, NH 03110

SALES HISTORY

Date	Book	Page	Type	Price	Grantor
04/01/2013	5424	12	Q V	140,000	GARABEDIAN,

PICTURE

LISTING HISTORY

03/15/13 CRVL
12/12/02 JDRL

NOTES

VACANT; WOODED; FAIRLY LEVEL;4/13 SALE $500,000 WITH 5/29, $140,000 ALLOCATED TO THIS PARCEL

EXTRA FEATURES VALUATION

Feature Type	Units	Lngth x Width	Size Adj	Rate	Cond	Market Value	Notes

MUNICIPAL SOFTWARE BY AVITAR

AUBURN ASSESSING OFFICE

PARCEL TOTAL TAXABLE VALUE

Year	Building	Features	Land
2011	$ 0	$ 0	$ 130,000
		Parcel Total:	$ 130,000
2013	**$ 0**	**$ 0**	**$ 140,000**
		Parcel Total:	**$ 140,000**

LAND VALUATION

Zone: RESIDENTIAL 1 & 2 **Minimum Acreage:** 2.00 **Minimum Frontage:** 200 **Site:** **Driveway:** **Road:**

Land Type	Units	Base Rate	NC	Adj	Site	Road	DWay	Topography	Cond	Ad Valorem	SPI	R	Tax Value	Notes
1F RES	1.000 ac	140,000	E	100	100	100	100	100 -- LEVEL	100	140,000	0	N	140,000	UND
	1.000 ac									140,000			**140,000**	

PICTURE

OWNER

MAVERICK DEVELOPMENT CORP

PO BOX 10833

BEDFORD, NH 03110

TAXABLE DISTRICTS

District	Percentage

PERMITS

Date	Permit ID	Permit Type	Notes

BUILDING DETAILS

Model:
Roof:
Ext:
Int:
Floor:
Heat:
Bedrooms: Baths: Fixtures:
Extra Kitchens: Fireplaces:
A/C: Generators:
Quality:
Com. Wall:
Stories:
Base Type:

BUILDING SUB AREA DETAILS

2013 BASE YEAR BUILDING VALUATION

Year Built:
Condition For Age: %
Physical:
Functional:
Economic:
Temporary:
%

OWNER INFORMATION

BELLO DUSTIN
BELLO CINDY
52 DONALD DRIVE

AUBURN, NH 03032-0833

SALES HISTORY

Date	Book	Page	Type	Price	Grantor
02/21/2013	5411	1463	Q V	250,666	MAVERICK

PICTURE

LISTING HISTORY

04/03/13 DMPL
04/12/10 LMUL

NOTES

GRN;4/10 AP W/ HOUSE TBB 679,900; 4/13 P/U NEW HSE, HSE NEEDS KIT, FLRING, TRIM & FIN HEATING-HSE IS 80% COMPLETED RECK 2014;

EXTRA FEATURES VALUATION

Feature Type	Units	Lngth x Width	Size Adj	Rate	Cond	Market Value	Notes
FIREPLACE 1-STAND	1		100	3,000.00	100	3,000	
						3,000	

MUNICIPAL SOFTWARE BY AVITAR

AUBURN ASSESSING OFFICE

PARCEL TOTAL TAXABLE VALUE

Year	Building	Features	Land
2011	$ 0	$ 0	$ 174,600
		Parcel Total:	$ 174,600
2013	**$ 198,100**	**$ 3,000**	**$ 208,600**
		Parcel Total:	**$ 409,700**

LAND VALUATION

Zone: RESIDENTIAL 1 & 2 **Minimum Acreage:** 2.00 **Minimum Frontage:** 200 **Site:** AVERAGE **Driveway:** DIRT **Road:** PAVED

Land Type	Units	Base Rate	NC	Adj	Site	Road	DWay	Topography	Cond	Ad Valorem	SPI	R	Tax Value	Notes
1F RES	2.000 ac	144,000	H	130	100	100	97	95 -- MILD	100	172,500	0	N	172,500	
1F RES	11.564 ac	x 3,500	X	94				95 -- MILD	100	36,100	0	N	36,100	
	13.564 ac									208,600			**208,600**	

PICTURE

OWNER

BELLO DUSTIN
BELLO CINDY
52 DONALD DRIVE

AUBURN, NH 03032-0833

TAXABLE DISTRICTS

District	Percentage

PERMITS

Date	Permit ID	Permit Type	Notes
01/07/13	13-012	NEW HOME	FOUNDATION PERMIT 12-
12/19/12	12-608	NEW HOME	

BUILDING DETAILS

Model: **2.00 STORY FRAME COLONIAL**
Roof: **GABLE OR HIP/ASPHALT**
Ext: **VINYL SIDING**
Int: **DRYWALL**
Floor: **HARDWOOD/CARPET**
Heat: **GAS/FA DUCTED**
Bedrooms: **4** Baths: **2.5** Fixtures: **10**
Extra Kitchens: Fireplaces:
A/C: **Yes 100.00 %** Generators:
Quality: **A3 AVG+30**
Com. Wall:
Size Adj: **0.9108** Base Rate: **RSA 60.00**
Bldg. Rate: **1.2068**
Sq. Foot Cost: **$ 72.41**

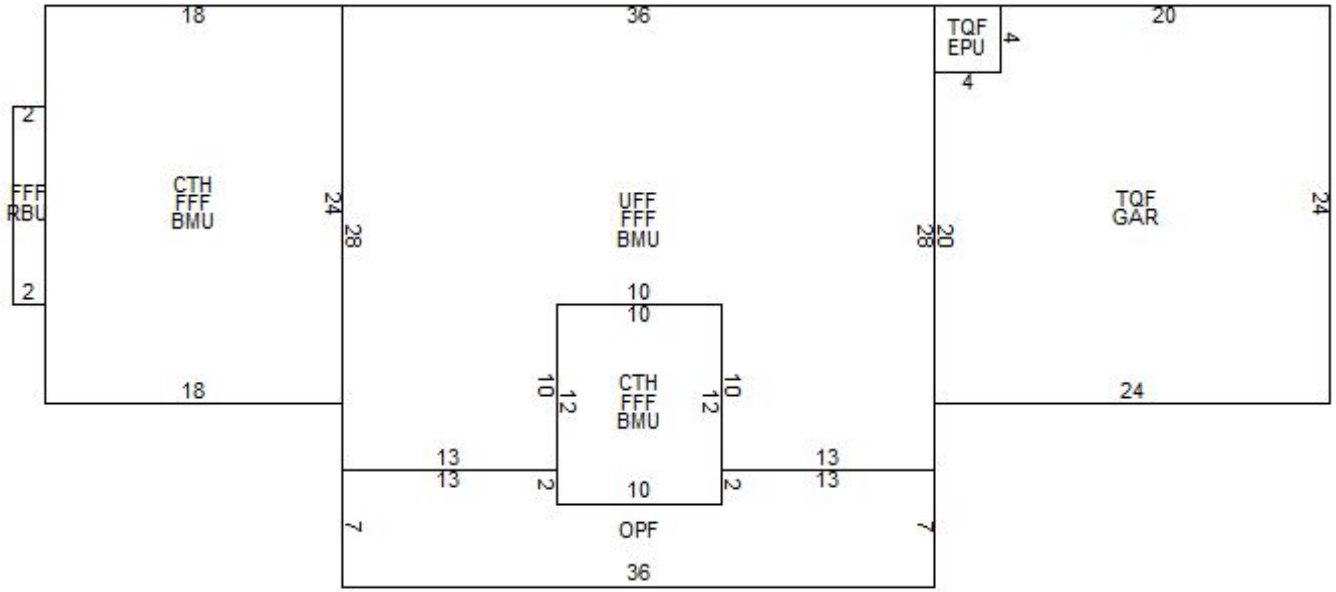

BUILDING SUB AREA DETAILS

ID	Description	Area	Adj.	Effect.
CTH	CATHEDRAL	552	0.10	55
FFF	FST FLR FIN	1484	1.00	1484
BMU	BSMNT	1460	0.15	219
RBU	RAISED BSMNT	24	0.25	6
UFF	UPPER FLR FIN	908	1.00	908
OPF	OPEN PORCH	232	0.25	58
TQF	3/4 STRY FIN	576	0.75	432
EPU	COVERED	16	0.35	6
GAR	GARAGE	560	0.45	252
GLA:	**2,824**	**5,812**		**3,420**

2013 BASE YEAR BUILDING VALUATION

Market Cost New:		**$ 247,642**
Year Built:		**2013**
Condition For Age:	AVERAGE	
Physical:		
Functional:		
Economic:		
Temporary:	UC-2013	**20 %**
Total Depreciation:		**20 %**
Building Value:		**$ 198,100**

OWNER INFORMATION

VILLAGE AT MT MINER LLC

16 HIGH STREET
SUITE #3
MANCHESTER, NH 03101

SALES HISTORY

Date	Book	Page	Type	Price	Grantor
01/04/2013	5396	403	Q V	465,000	TENN JAMES

PICTURE

LISTING HISTORY

03/15/13 CRVL
10/20/03 DWP
10/31/02 JDRL

NOTES

VACANT; WOODED; NO ACCESS, BLOCKED OFF W/ BOULDERS; APPEARS TO BE GOOD SUB-DIVIDABLE LOT;BEST SITE MODIFIER TO ACCOUNT/ADJ FOR APPROVALS IN PLACE/COURT ORDER RES/HBU

EXTRA FEATURES VALUATION

Feature Type	Units	Lngth x Width	Size Adj	Rate	Cond	Market Value	Notes

MUNICIPAL SOFTWARE BY AVITAR

AUBURN ASSESSING OFFICE

PARCEL TOTAL TAXABLE VALUE

Year	Building	Features	Land
2011	$ 0	$ 0	$ 18,848
		Parcel Total:	$ 18,848
2013	**$ 0**	**$ 0**	**$ 7,779**
		Parcel Total:	**$ 7,779**

LAND VALUATION

Zone: INDUSTRIAL **Minimum Acreage:** 3.00 **Minimum Frontage:** 300 **Site:** BEST **Driveway:** NONE **Road:** PAVED

Land Type	Units	Base Rate	NC	Adj	Site	Road	DWay	Topography	Cond	Ad Valorem	SPI	R	Tax Value	Notes
UNMNGD OTHER	3.000 ac	148,000	E	100	125	100	100	90 -- ROLLING	100		80	N	131	
UNMNGD OTHER	172.000 ac	x 3,500	X	52				90 -- ROLLING	100		80	N	7,534	
UNPRODUCTIVE	11.411 ac	x 3,500	X	52				90 -- ROLLING	10		80	N	114	WET
	186.411 ac												**7,779**	

PICTURE

OWNER

VILLAGE AT MT MINER LLC

16 HIGH STREET
SUITE #3
MANCHESTER, NH 03101

TAXABLE DISTRICTS

District	Percentage

PERMITS

Date	Permit ID	Permit Type	Notes

BUILDING DETAILS

Model:
Roof:
Ext:
Int:
Floor:
Heat:
Bedrooms: Baths: Fixtures:
Extra Kitchens: Fireplaces:
A/C: Generators:
Quality:
Com. Wall:
Stories:
Base Type:

BUILDING SUB AREA DETAILS

2013 BASE YEAR BUILDING VALUATION

Year Built:
Condition For Age: %
Physical:
Functional:
Economic:
Temporary:
%

OWNER INFORMATION

BOUTIN EUGENE
BOUTIN CATHERINE
82 CEDAR CREST LANE

AUBURN, NH 03032

SALES HISTORY

Date	Book	Page	Type	Price	Grantor
12/26/2012	5392	2515	Q V	185,000	TENN SYLVIA C
08/08/2001	??	??	U V 24	1	UNKNOWN

PICTURE

LISTING HISTORY

03/15/13 CRVL
09/21/06 DMRL
10/30/02 JDRL

NOTES

VACANT; WOODED; END LOT; REVIEW VU WHEN DEVELOPED; 9/06 NO CHG;

EXTRA FEATURES VALUATION

Feature Type	Units	Lngth x Width	Size Adj	Rate	Cond	Market Value	Notes

MUNICIPAL SOFTWARE BY AVITAR

AUBURN ASSESSING OFFICE

PARCEL TOTAL TAXABLE VALUE

Year	Building	Features	Land
2011	$ 0	$ 0	$ 338
		Parcel Total:	$ 338
2013	**$ 0**	**$ 0**	**$ 181,400**
		Parcel Total:	**$ 181,400**

LAND VALUATION

Zone: RESIDENTIAL 1 & 2 **Minimum Acreage:** 2.00 **Minimum Frontage:** 200 **Site:** AVERAGE **Driveway:** **Road:** PAVED

Land Type	Units	Base Rate	NC	Adj	Site	Road	DWay	Topography	Cond	Ad Valorem	SPI	R	Tax Value	Notes
1F RES	2.000 ac	144,000	H	130	100	100	100	95 -- MILD	100	177,800	0	N	177,800	UND
1F RES	1.131 ac	x 3,500	X	100				90 -- ROLLING	100	3,600	0	N	3,600	
	3.131 ac									181,400			**181,400**	

PICTURE

OWNER

BOUTIN EUGENE
BOUTIN CATHERINE
82 CEDAR CREST LANE

AUBURN, NH 03032

TAXABLE DISTRICTS

District	Percentage

PERMITS

Date	Permit ID	Permit Type	Notes

BUILDING DETAILS

Model:
Roof:
Ext:
Int:
Floor:
Heat:
Bedrooms: Baths: Fixtures:
Extra Kitchens: Fireplaces:
A/C: Generators:
Quality:
Com. Wall:
Stories:

Base Type:

BUILDING SUB AREA DETAILS

2013 BASE YEAR BUILDING VALUATION

Year Built:
Condition For Age: %
Physical:
Functional:
Economic:
Temporary:
%

OWNER INFORMATION

STINSON HILLS LLC

317 SOUTH RIVER ROAD

BEDFORD, NH 03110

SALES HISTORY

Date	Book	Page	Type	Price	Grantor
09/25/2012	5359	2599	Q V	130,000	ZYLA WILLIAM P

PICTURE

LISTING HISTORY

03/22/13 CRVL
04/01/12 LMSL

NOTES

3 LOT SUBDIV D-37038; 3/13 WOODED-WILL NEED GRADING;

EXTRA FEATURES VALUATION

Feature Type	Units	Lngth x Width	Size Adj	Rate	Cond	Market Value	Notes

MUNICIPAL SOFTWARE BY AVITAR

AUBURN ASSESSING OFFICE

PARCEL TOTAL TAXABLE VALUE

Year	Building	Features	Land
2011	$ 0	$ 0	$ 135,100
		Parcel Total:	$ 135,100
2013	**$ 0**	**$ 0**	**$ 137,000**
		Parcel Total:	**$ 137,000**

LAND VALUATION

Zone: RESIDENTIAL 1 & 2 **Minimum Acreage:** 2.00 **Minimum Frontage:** 200 **Site:** AVERAGE **Driveway:** NONE **Road:** PAVED

Land Type	Units	Base Rate	NC	Adj	Site	Road	DWay	Topography	Cond	Ad Valorem	SPI	R	Tax Value	Notes
1F RES	2.000 ac	144,000	E	100	100	100	100	95 -- MILD	100	136,800	0	N	136,800	
1F RES	0.064 ac	x 3,500	X	100				95 -- MILD	100	200	0	N	200	
	2.064 ac									137,000			**137,000**	

PICTURE

OWNER

STINSON HILLS LLC

317 SOUTH RIVER ROAD

BEDFORD, NH 03110

TAXABLE DISTRICTS

District	Percentage

PERMITS

Date	Permit ID	Permit Type	Notes
03/27/13	13-150	NEW HOME	SUBCONTRACTORS TO SE

BUILDING DETAILS

Model:
Roof:
Ext:
Int:
Floor:
Heat:
Bedrooms: Baths: Fixtures:
Extra Kitchens: Fireplaces:
A/C: Generators:
Quality:
Com. Wall:
Stories:
Base Type:

BUILDING SUB AREA DETAILS

2013 BASE YEAR BUILDING VALUATION

Year Built:
Condition For Age: %
Physical:
Functional:
Economic:
Temporary:
%

OWNER INFORMATION

LEMAY MAUREEN E

812 HOOKSETT ROAD

AUBUURN, NH 03032

SALES HISTORY

Date	Book	Page	Type	Price	Grantor
06/05/2012	5322	988	Q V	145,000	THOMAS JAMES

PICTURE

LISTING HISTORY

03/22/13 CRVM

NOTES

3/13 NOH P/U HSE - EST 100% ;

EXTRA FEATURES VALUATION

Feature Type	Units	Lngth x Width	Size Adj	Rate	Cond	Market Value	Notes
FIREPLACE 1-STAND	1		100	3,000.00	100	3,000	GAS
						3,000	

MUNICIPAL SOFTWARE BY AVITAR

AUBURN ASSESSING OFFICE

PARCEL TOTAL TAXABLE VALUE

Year	Building	Features	Land
2013	**$ 256,300**	**$ 3,000**	**$ 144,000**
		Parcel Total:	**$ 403,300**

LAND VALUATION

Zone: RESIDENTIAL 1 & 2 **Minimum Acreage:** 2.00 **Minimum Frontage:** 200 **Site:** AVERAGE **Driveway:** PAVED **Road:** PAVED

Land Type	Units	Base Rate	NC	Adj	Site	Road	DWay	Topography	Cond	Ad Valorem	SPI	R	Tax Value	Notes
1F RES	2.000 ac	144,000	E	100	100	100	100	100 -- LEVEL	100	144,000	0	N	144,000	
1F RES	0.006 ac	x 3,500	X	100				100 -- LEVEL	100	0	0	N	0	
	2.006 ac									144,000			**144,000**	

Map: 000012 **Lot: 000002** **Sub: 000001** **Card: 1 of 1** **0812 HOOKSETT ROAD** **AUBURN** **Printed: 07/11/2013**

PICTURE

OWNER

LEMAY MAUREEN E

812 HOOKSETT ROAD

AUBUURN, NH 03032

TAXABLE DISTRICTS

District	Percentage

PERMITS

Date	Permit ID	Permit Type	Notes
06/04/12	12-218	NEW HOME	UNFINISHED BASEMENT,

BUILDING DETAILS

Model: **1.75 STORY FRAME CONTEMP**
Roof: **GABLE OR HIP/ASPHALT**
Ext: **VINYL SIDING**
Int: **DRYWALL**
Floor: **HARDWOOD/CARPET**
Heat: **GAS/FA DUCTED**
Bedrooms: **3** Baths: **1.0** Fixtures: **3**
Extra Kitchens: Fireplaces:
A/C: **Yes 100.00 %** Generators:
Quality: **A3 AVG+30**
Com. Wall:
Size Adj: **0.8919** Base Rate: **RSA 60.00**
Bldg. Rate: **1.1249**
Sq. Foot Cost: **$ 67.50**

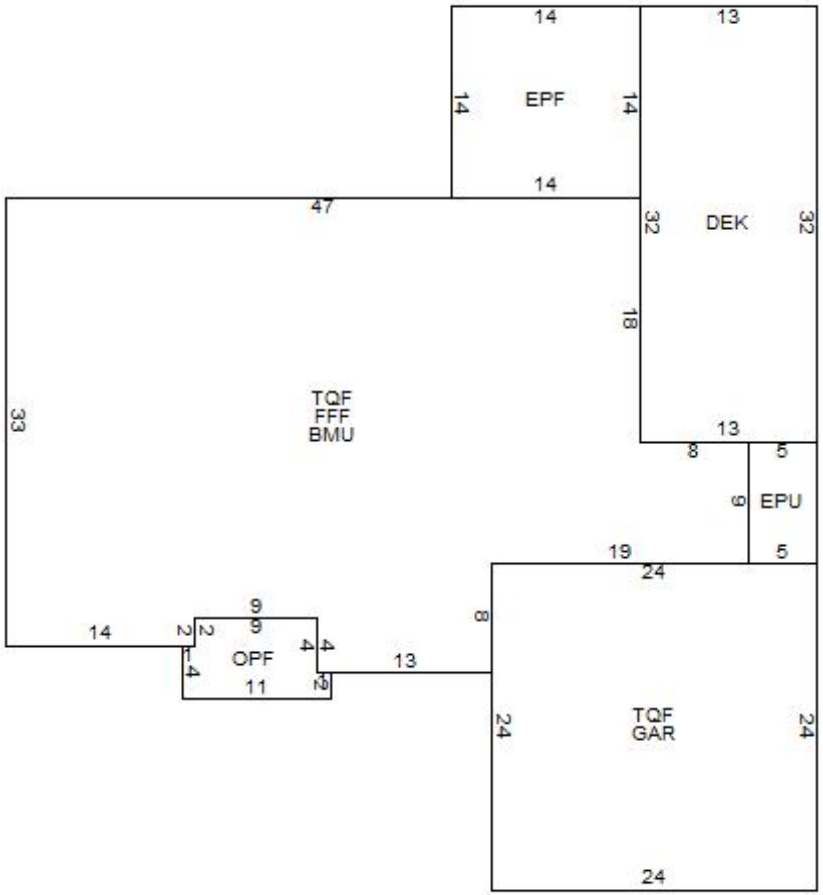

BUILDING SUB AREA DETAILS

ID	Description	Area	Adj.	Effect.
FFF	FST FLR FIN	1565	1.00	1565
BMU	BSMNT	1565	0.15	235
OPF	OPEN PORCH	60	0.25	15
EPF	ENCLSD PORCH	196	0.70	137
DEK	DECK/ENTRANCE	416	0.10	42
TQF	3/4 STRY FIN	2141	0.75	1606
GAR	GARAGE	576	0.45	259
EPU	COVERED	45	0.35	16
GLA:	**3,171**	**6,564**		**3,875**

2013 BASE YEAR BUILDING VALUATION

Market Cost New:		**$ 261,563**
Year Built:		**2012**
Condition For Age:	AVERAGE	**2 %**
Physical:		
Functional:		
Economic:		
Temporary:		
Total Depreciation:		**2 %**
Building Value:		**$ 256,300**

OWNER INFORMATION

DAIGLE DOUGLAS C
DAIGLE HELEN
24 DROUIN CIRCLE

AUBURN, NH 03032

SALES HISTORY

Date	Book	Page	Type	Price	Grantor
09/10/2012	5354	2365	Q V	208,833	DROUIN REJEAN AS
06/05/2009	5018	2949	U V 46		DROUIN REJEAN AS
05/06/2009	5007	2574	U V 46	40	DROUIN REJEAN AS
12/13/2006	4788	1102	U V 44	40	REJEAN DROUIN

PICTURE

LISTING HISTORY

04/05/13 DMPM
04/20/10 LMUL

NOTES

BROWN;4/13 P/U NEW HSE/EST INT/EST HSE IS 100%/FLAG 2014 FOR LANDSCAPING & PATIOS; 2F=ZBA VARANCE;

EXTRA FEATURES VALUATION

Feature Type	Units	Lngth x Width	Size Adj	Rate	Cond	Market Value	Notes

MUNICIPAL SOFTWARE BY AVITAR

AUBURN ASSESSING OFFICE

PARCEL TOTAL TAXABLE VALUE

Year	Building	Features	Land
2011	$ 0	$ 0	$ 164,000
		Parcel Total:	$ 164,000
2013	**$ 440,800**	**$ 0**	**$ 193,500**
		Parcel Total:	**$ 634,300**

LAND VALUATION

Zone: RESIDENTIAL 1 & 2 **Minimum Acreage:** 2.00 **Minimum Frontage:** 200 **Site:** VERY GOOD **Driveway:** PAVED **Road:** PAVED

Land Type	Units	Base Rate	NC	Adj	Site	Road	DWay	Topography	Cond	Ad Valorem	SPI	R	Tax Value	Notes
2F RES	2.000 ac	144,000	G	120	110	100	100	100 -- LEVEL	100	190,100	0	N	190,100	
2F RES	1.956 ac	x 3,500	X	100					50	3,400	0	N	3,400	WET
	3.956 ac									193,500			**193,500**	

PICTURE

OWNER

DAIGLE DOUGLAS C
DAIGLE HELEN
24 DROUIN CIRCLE

AUBURN, NH 03032

TAXABLE DISTRICTS

District	Percentage

PERMITS

Date	Permit ID	Permit Type	Notes
09/06/12	12-398	NEW HOME	SUBCONTRACTORS TO SE

BUILDING DETAILS

Model: **1.00 STORY FRAME MULTI FAM**
Roof: **GABLE OR HIP/ASPHALT**
Ext: **VINYL SIDING**
Int: **DRYWALL**
Floor: **HARD TILE/HARDWOOD**
Heat: **GAS/FA DUCTED**
Bedrooms: **6** Baths: **6.0** Fixtures:
Extra Kitchens: Fireplaces:
A/C: **Yes 100.00 %** Generators:
Quality: **A4 EXC**
Com. Wall:
Size Adj: **0.8426** Base Rate: **RSA 60.00**
Bldg. Rate: **1.2622**
Sq. Foot Cost: **$ 75.73**

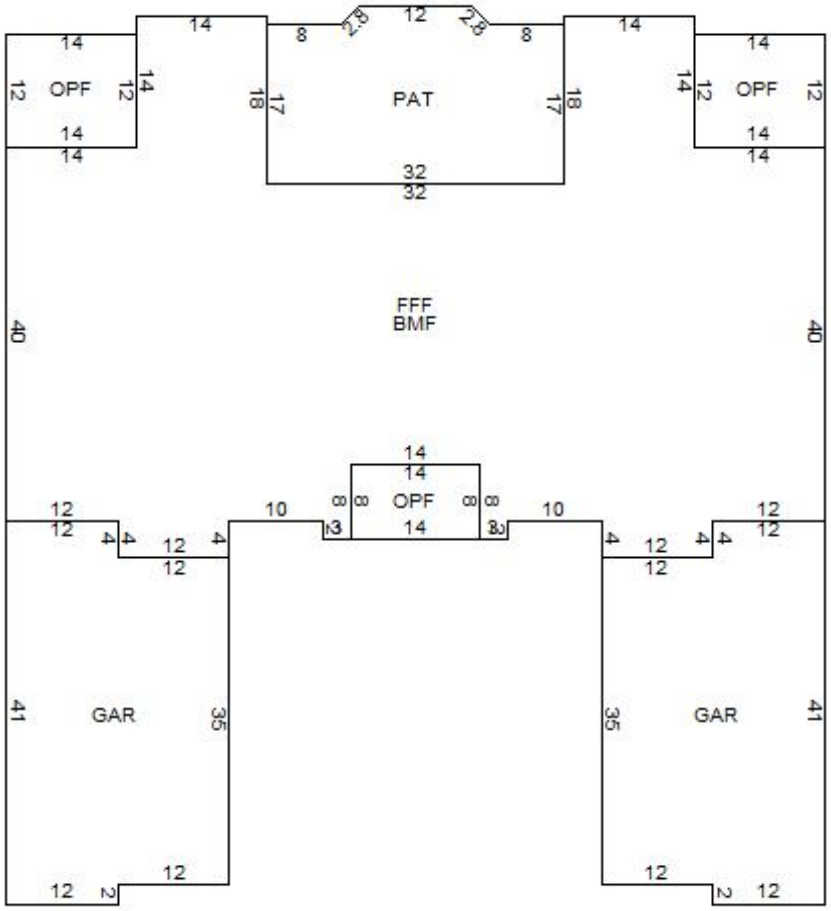

BUILDING SUB AREA DETAILS

ID	Description	Area	Adj.	Effect.
GAR	GARAGE	1824	0.45	821
BMF	BSMNT FINISHED	3808	0.30	1142
PAT	PATIO	572	0.10	57
OPF	OPEN PORCH	448	0.25	112
FFF	FST FLR FIN	3808	1.00	3808
GLA:	**3,808**	**10,460**		**5,940**

2013 BASE YEAR BUILDING VALUATION

Market Cost New:		**$ 449,836**
Year Built:		**2012**
Condition For Age:	GOOD	**2 %**
Physical:		
Functional:		
Economic:		
Temporary:		
Total Depreciation:		**2 %**
Building Value:		**$ 440,800**

Sales Analysis Results

Auburn -- 07/25/2013

Sales Analysis Statistics			
Number of Sales:	**72**	Mean Sales Ratio:	**0.9999**
Minimum Sales Ratio:	**0.8577**	Median Sales Ratio:	**0.9920**
Maximum Sales Ratio:	**1.1585**	Standard Deviation:	**0.0636**
Aggregate Sales Ratio:	**0.9917**	Coefficient of Dispersion:	**4.7732**
		Price Related Differential:	**1.0082**

Sales Analysis Criteria	
Sold: 01/01/2012 - 07/11/2013	Sale Ratios: 0.000 - 999.999
Building Value: 0 - 99999999	Bldg Eff. Area: 0 - 99999999
Land Value: 0 - 99999999	Land Use: ALL
Current Use CR: 0 - 99999999	Acres: 0 - 99999999
Year Built: 1600 - 2013	Trend: 0.000% Prior to 07/25/2013
Story Height: ALL	Neighborhood: ALL
Base Rate: ALL	Zone: ALL
Qualified: YES	Unqualified: NO
Improved: YES	Vacant: NO
View: All	Waterfront: All
Include Comm./Ind./Util.: YES	

Auburn Sales Analysis Report

Ratio	Map	Lot	Sub	Zone	Acres	LC	NC	BR	SH Eff. Area	Sale Price	Assessment Sale Date	I	Q	Unqualified Description Grantor	Prior Year Assessment
1.116	000008	000060	000001	02	2.00	R1	F	RSA	B 1,802	$ 233,000	$ 260,000 01/13/2012	I	Q	GALLANT, PATRICIA E.,	$ 0
1.104	000011	000037	0001-6	02	2.18	R1	F	RSA	C 2,234	$ 235,000	$ 259,500 01/27/2012	I	Q	WHITTEMORE CAROL J	$ 0
1.037	000012	000019	000005	02	5.39	R1	G	RSA	D 2,599	$ 312,533	$ 324,000 01/30/2012	I	Q	VOSSLER, GEORGE C & MA	$ 0
1.076	000008	000013	000017	02	2.89	R1	G	RSA	E 3,712	$ 375,000	$ 403,600 02/13/2012	I	Q	OHAR OREST P	$ 0
0.993	000002	000003	000062	01	1.47	R1	H	RSA	D 3,511	$ 440,200	$ 437,100 02/29/2012	I	Q	ESPANA BUILDING & DEVE	$ 0
1.094	000005	000101	000000	02	2.80	R1	E	RSA	C 1,680	$ 204,000	$ 223,100 03/23/2012	I	Q	WOLPER BARRY	$ 0
0.966	000026	000019	000000	03	2.00	CI	E	CFF	A 1,491	$ 290,000	$ 280,100 03/30/2012	I	Q	TSOURVAKAS, VISSARION	$ 0
0.950	000005	000069	000022	01	0.91	R1	H	RSA	D 2,681	$ 379,533	$ 360,700 04/02/2012	I	Q	CHESTER HILL LLC	$ 0
1.110	000014	000030	000000	02	1.22	R1	E	RSA	A 1,638	$ 202,000	$ 224,300 04/02/2012	I	Q	338 WILSON CROSSING LL	$ 0
1.159	000017	000008	000000	02	0.50	R1	E	RSA	A 1,444	$ 162,533	$ 188,300 04/17/2012	I	Q	SWEENEY DAVID F	$ 0
0.973	000002	000003	000031	01	1.08	R1	H	RSA	D 3,353	$ 425,000	$ 413,400 04/25/2012	I	Q	KLEIN EDWARD E	$ 0
0.996	000005	000069	000030	01	1.15	R1	H	RSA	D 2,381	$ 347,800	$ 346,300 04/27/2012	I	Q	CHESTER HILL LLC	$ 0
0.983	000001	000016	0023-1	03	0.00	CI	E	CWH	D 3,057	$ 130,000	$ 127,800 05/14/2012	I	Q	BYPASS PROPERTIES LLC	$ 0
1.013	000001	000016	0023-2	03	0.00	CI	E	CWH	D 2,750	$ 120,000	$ 121,500 05/14/2012	I	Q	BYPASS PROPERTIES LLC	$ 0
0.965	000005	000069	000031	01	0.96	R1	H	RSA	D 3,053	$ 398,000	$ 384,000 05/22/2012	I	Q	CHESTER HILL LLC	$ 0
0.915	000005	000071	000012	02	3.73	R1W	H	RSA	D 2,958	$ 440,000	$ 402,800 05/25/2012	I	Q	COCHRAN III, ARTHUR	$ 0
0.951	000006	000014	000001	02	2.10	R1	E	RSA	D 3,293	$ 388,000	$ 369,000 06/05/2012	I	Q	LEMAY DANIEL	$ 0
1.021	000011	000008	000004	02	6.03	R1	F	RSA	C 3,308	$ 325,000	$ 331,900 06/11/2012	I	Q	RUSSO, JOHN	$ 0
0.986	000009	000003	000009	02	2.22	R1	G	RSA	C 2,773	$ 338,000	$ 333,100 06/15/2012	I	Q	DANOS, SANDRA J	$ 0

Ratio	Map	Lot	Sub	Zone	Acres	LC	NC	BR	SH Eff. Area	Sale Price	Assessment Sale Date	I	Q	Unqualified Description Grantor	Prior Year Assessment
1.112	000014	000017	000000	02	1.15	R1	F	RSA	A 1,933	$ 235,000	$ 261,400 06/15/2012	I	Q	BOULANGER, ROBERT A	$ 0
0.966	000009	000028	0005-3	02	2.01	R1	H	RSA	D 2,928	$ 344,933	$ 333,200 06/18/2012	I	Q	MARSH, GARY S	$ 0
0.985	000002	000003	000030	01	1.03	R1	H	RSA	C 3,199	$ 404,000	$ 398,100 07/03/2012	I	Q	ESPANA BUILDING & DEVE	$ 0
0.973	000005	000069	000018	01	1.02	R1	H	RSA	D 2,762	$ 379,933	$ 369,500 07/03/2012	I	Q	CHESTER HILL LLC	$ 0
1.105	000011	000018	000018	01	2.63	R1	G	RSA	D 3,176	$ 355,000	$ 392,400 07/27/2012	I	Q	VALBONA, STEVEN M	$ 0
0.919	000002	000003	000061	01	1.58	R1	H	RSA	D 3,312	$ 464,800	$ 427,100 08/06/2012	I	Q	ESPANA BLDG & DEV	$ 0
0.905	000005	000069	000019	01	0.90	R1	H	RSA	D 3,034	$ 437,733	$ 396,100 08/06/2012	I	Q	CHESTER HILL LLC	$ 0
1.157	000005	000043	000014	01	0.78	R1	H	RSA	C 3,784	$ 363,000	$ 419,900 08/09/2012	I	Q	JMJ PROPERTIES LLC	$ 0
1.034	000005	000069	000017	01	1.13	R1	H	RSA	D 2,695	$ 352,533	$ 364,600 08/13/2012	I	Q	CHESTER HILL LLC	$ 0
1.000	000008	000017	000008	02	2.48	R1	G	RSA	D 3,553	$ 369,000	$ 368,900 08/21/2012	I	Q	GALLER, SARAH C & MICH	$ 0
0.949	000017	000085	000000	02	0.66	R1	E	RSA	A 1,712	$ 241,533	$ 229,300 08/22/2012	I	Q	THOMPSON SCOTT	$ 0
0.992	000005	000043	000017	01	0.73	R1	H	RSA	D 2,727	$ 357,000	$ 354,200 08/23/2012	I	Q	JMJ PROPERTIES LLC	$ 0
0.900	000008	000048	0001-8	02	2.00	R1	H	RSA	D 2,564	$ 400,533	$ 360,400 08/24/2012	I	Q	MAVERICK DEVELOPMENT C	$ 0
0.905	000008	000048	000001	02	3.36	R1	H	RSA	D 3,352	$ 455,000	$ 412,000 09/04/2012	I	Q	MAVERICK DEVELOPMENT C	$ 0
0.992	000005	000043	000015	01	0.73	R1	H	RSA	C 3,307	$ 395,000	$ 391,800 09/10/2012	I	Q	JMJ PROPERTIES LLC	$ 0
0.962	000026	000007	000001	03	2.17	R1	E	RSA	E 3,221	$ 375,000	$ 360,600 09/10/2012	I	Q	FOSKITT PAUL J & SUSAN	$ 0
0.991	000002	000003	000010	01	1.29	R1	H	RSA	D 3,199	$ 395,000	$ 391,500 09/17/2012	I	Q	TARNESS MATTHEW	$ 0
1.006	000011	000045	000003	02	2.33	R1	F	RSA	D 2,084	$ 248,066	$ 249,600 09/17/2012	I	Q	HOLT, CHRISTOPHER M	$ 0
1.022	000009	000041	000000	02	1.00	R1	E	RSA	D 2,755	$ 307,933	$ 314,800 09/25/2012	I	Q	ESPANA BUILDING & DEVE	$ 0
0.931	000005	000069	000003	01	2.47	R1	H	RSA	D 3,042	$ 439,933	$ 409,400 09/27/2012	I	Q	CHESTER HILL LLC	$ 0

Ratio	Map	Lot	Sub	Zone	Acres	LC	NC	BR	SH Eff. Area	Sale Price	Assessment Sale Date	I	Q	Unqualified Description Grantor	Prior Year Assessment
0.979	000009	000028	0001-9	02	7.28	R1	H	RSA	D 4,599	$ 500,000	$ 489,600 10/09/2012	I	Q	STAPEL SCOTT L	$ 0
1.038	000002	000003	000057	01	1.18	R1	H	RSA	D 2,375	$ 330,533	$ 343,000 10/12/2012	I	Q	ESPANA BUILDING & DEVE	$ 0
1.016	000005	000043	000011	01	0.84	R1	H	RSA	D 2,461	$ 330,533	$ 335,700 10/17/2012	I	Q	JMJ PROPERTIES LLC	$ 0
1.015	000013	000015	000001	03	2.04	R1	E	RSA	E 2,753	$ 309,200	$ 313,900 10/17/2012	I	Q	ADELPHI HOMES INC	$ 0
0.966	000005	000069	000007	01	2.67	R1	H	RSA	D 3,297	$ 435,133	$ 420,300 10/24/2012	I	Q	CHESTER HILL LLC	$ 0
1.012	000002	000009	000033	01	2.17	R1	H	RSA	D 2,866	$ 381,733	$ 386,500 11/01/2012	I	Q	ESPANA BUILDING & DEVE	$ 0
0.987	000002	000003	000063	01	2.12	R1	H	RSA	E 5,434	$ 551,400	$ 544,200 11/19/2012	I	Q	ESPANA BUILDING & DEVE	$ 0
1.047	000005	000043	000019	01	0.66	R1	H	RSA	D 2,769	$ 337,000	$ 353,000 11/19/2012	I	Q	JMJ PROPERTIES LLC	$ 0
0.975	000005	000069	000015	01	1.15	R1	H	RSA	D 2,949	$ 382,933	$ 373,400 12/04/2012	I	Q	CHESTER HILL LLC	$ 0
0.936	000005	000069	000014	01	0.73	R1	H	RSA	A 2,709	$ 399,800	$ 374,300 12/10/2012	I	Q	CHESTER HILL LLC	$ 0
0.995	000011	000056	000017	02	2.00	R1	F	RSA	D 2,409	$ 286,000	$ 284,700 12/17/2012	I	Q	BONNIER, JAMES A	$ 0
1.038	000005	000043	000016	01	0.80	R1	H	RSA	D 3,599	$ 398,000	$ 413,300 12/19/2012	I	Q	JMJ PROPERTIES LLC	$ 0
1.136	000017	000001	000000	02	0.69	R1	E	RSA	A 1,825	$ 180,000	$ 204,400 12/21/2012	I	Q	BAKER JEFF	$ 0
0.909	000005	000069	000013	01	0.87	R1	H	RSA	D 3,552	$ 463,533	$ 421,500 12/31/2012	I	Q	CHESTER HILL LLC	$ 0
1.012	000002	000003	000058	01	1.38	R1	H	RSA	D 2,375	$ 340,000	$ 344,000 01/14/2013	I	Q	ESPANA BUILDING & DEVE	$ 0
0.976	000005	000043	000002	01	0.83	R1	H	RSA	D 2,192	$ 337,000	$ 328,800 01/16/2013	I	Q	JACKSON TYLER M	$ 0
0.858	000005	000069	000021	01	0.91	R1	H	RSA	D 3,447	$ 487,800	$ 418,400 01/28/2013	I	Q	CHESTER HILL LLC	$ 0
0.985	000002	000003	000056	01	1.16	R1	H	RSA	D 2,273	$ 340,352	$ 335,300 01/29/2013	I	Q	ESPANA BUILDING & DEVE	$ 0
1.072	000014	000005	000000	02	1.03	R1	F	RSA	A 1,996	$ 240,000	$ 257,200 01/29/2013	I	Q	MARTIN, RICHARD P	$ 0
0.918	000025	000015	000000	02	0.12	R1	E	RSA	C 1,530	$ 170,000	$ 156,100 01/31/2013	I	Q	RAYMOND, CHRIS A	$ 0

Ratio	Map	Lot	Sub	Zone	Acres	LC	NC	BR	SH Eff. Area	Sale Price	Assessment Sale Date	I	Q	Unqualified Description Grantor	Prior Year Assessment
0.989	000005	000002	000008	02	2.00	R1	F	RSA	D 1,862	$ 239,933	$ 237,400 02/01/2013	I	Q	MULLEN AMANDA R	$ 0
1.042	000020	000018	000000	02	10.23	R1	E	RSA	D 2,049	$ 268,900	$ 280,100 03/15/2013	I	Q	SOUTHWORTH, STEVEN	$ 0
1.000	000002	000003	000050	01	1.20	R1	H	RSA	D 3,419	$ 395,000	$ 394,900 03/18/2013	I	Q	LIMA ROBERT	$ 0
1.030	000005	000010	000006	02	2.01	R1	F	RSA	A 1,860	$ 230,000	$ 236,800 03/21/2013	I	Q	BIENVENUE, LEONARD	$ 0
0.935	000005	000043	000001	01	0.73	R1	H	RSA	C 2,502	$ 357,000	$ 333,700 03/28/2013	I	Q	JMJ PROPERTIES LLC	$ 0
1.009	000005	000043	000009	01	0.93	R1	H	RSA	D 3,098	$ 370,600	$ 374,100 03/28/2013	I	Q	JMJ PROPERTIES LLC	$ 0
0.989	000002	000009	000029	01	2.12	R1	H	RSA	D 3,362	$ 430,800	$ 425,900 04/01/2013	I	Q	ESPANA BUILDING & DEVE	$ 0
1.063	000008	000006	000001	02	5.38	R1	E	RSA	D 3,282	$ 275,000	$ 292,400 04/01/2013	I	Q	STEIN, BRUCE P	$ 0
1.002	000022	000016	000000	02	0.41	R1	E	RSA	A 1,724	$ 196,000	$ 196,400 04/02/2013	I	Q	O'CONNELL, SEAN P	$ 0
0.935	000007	000025	000041	02	0.61	R1	G	RSA	D 3,159	$ 347,000	$ 324,600 04/05/2013	I	Q	BISSETT BRUCE A	$ 0
0.903	000021	000007	000000	02	0.16	R1	E	RSA	A 1,348	$ 179,933	$ 162,400 04/18/2013	I	Q	DESLAURIERS, NANCY	$ 0
0.985	000013	000023	000023	02	2.00	R1	F	RSA	A 1,558	$ 228,000	$ 224,600 05/02/2013	I	Q	WILSON THOMAS W	$ 0
1.027	000002	000003	000020	01	1.56	R1	H	RSA	D 2,831	$ 368,000	$ 377,900 05/24/2013	I	Q	VELAZQUEZ, MICHAEL A	$ 0

Auburn:Median A/S Ratio by Year of Construction

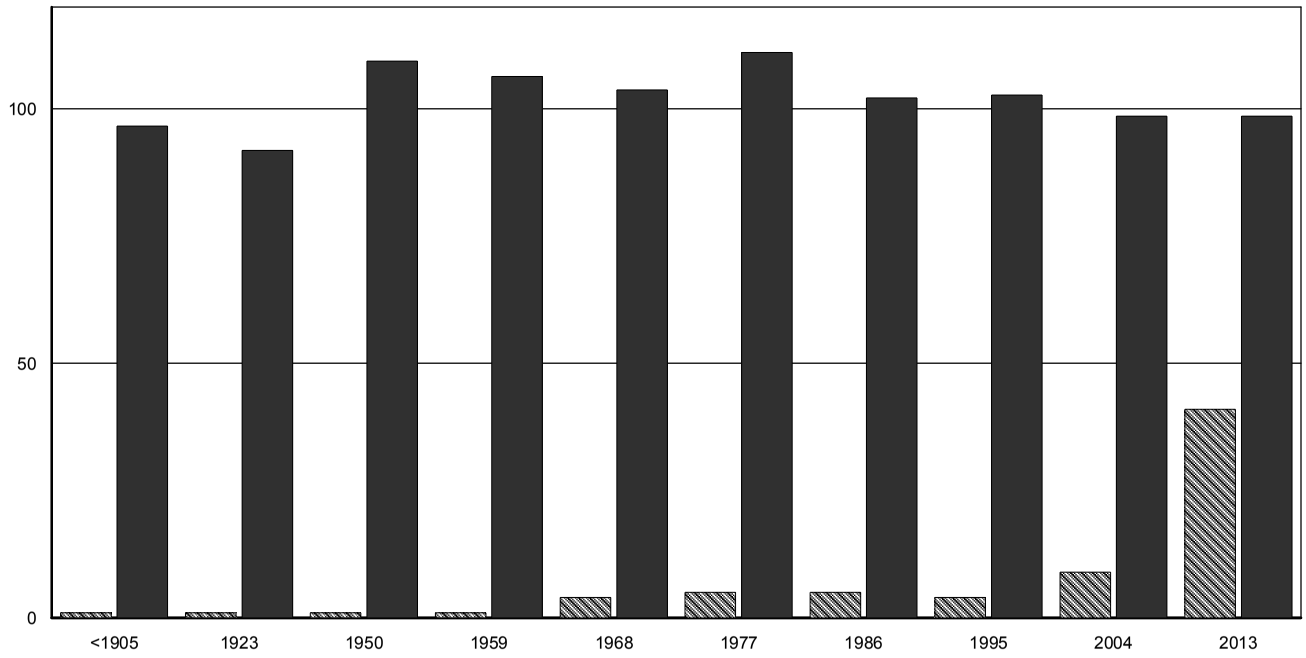

	# of Parcels	Median A/S x 100
<1905	1	96.59
1923	1	91.82
1950	1	109.36
1959	1	106.33
1968	4	103.69
1977	5	111.04
1986	5	102.12
1995	4	102.71
2004	9	98.55
2013	41	98.54

Auburn:Median A/S Ratio by Effective Area

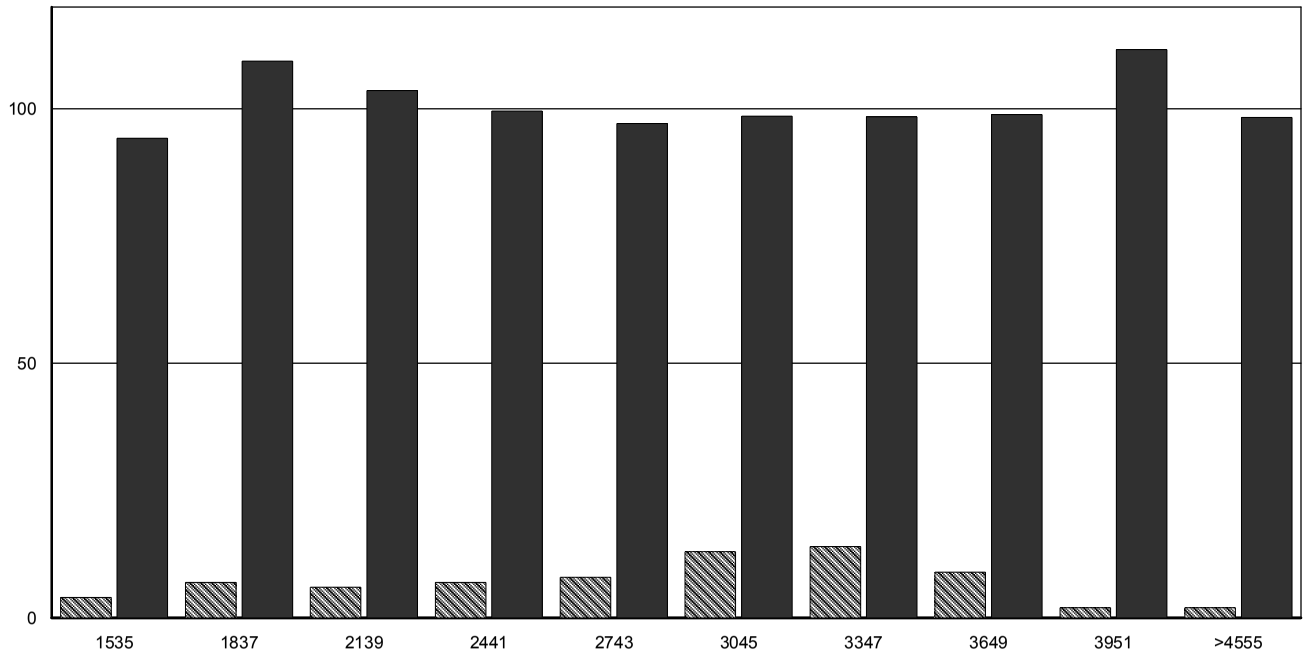

	# of Parcels	Median A/S x 100
1535	4	94.20
1837	7	109.36
2139	6	103.56
2441	7	99.57
2743	8	97.13
3045	13	98.55
3347	14	98.42
3649	9	98.86
3951	2	111.65
>4555	2	98.31

Auburn:Median A/S Ratio by Story Height

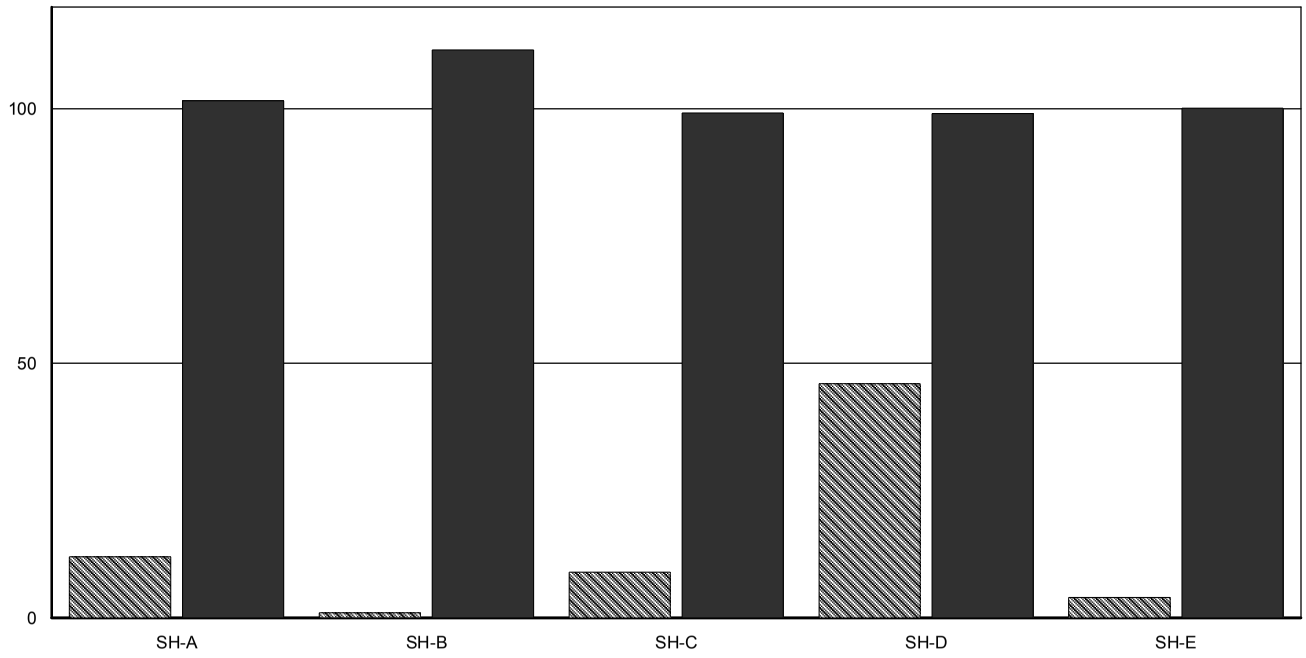

	# of Parcels	Median A/S x 100
SH-A	12	101.58
SH-B	1	111.59
SH-C	9	99.19
SH-D	46	99.03
SH-E	4	100.11

Auburn:Distribution of Sale Ratios

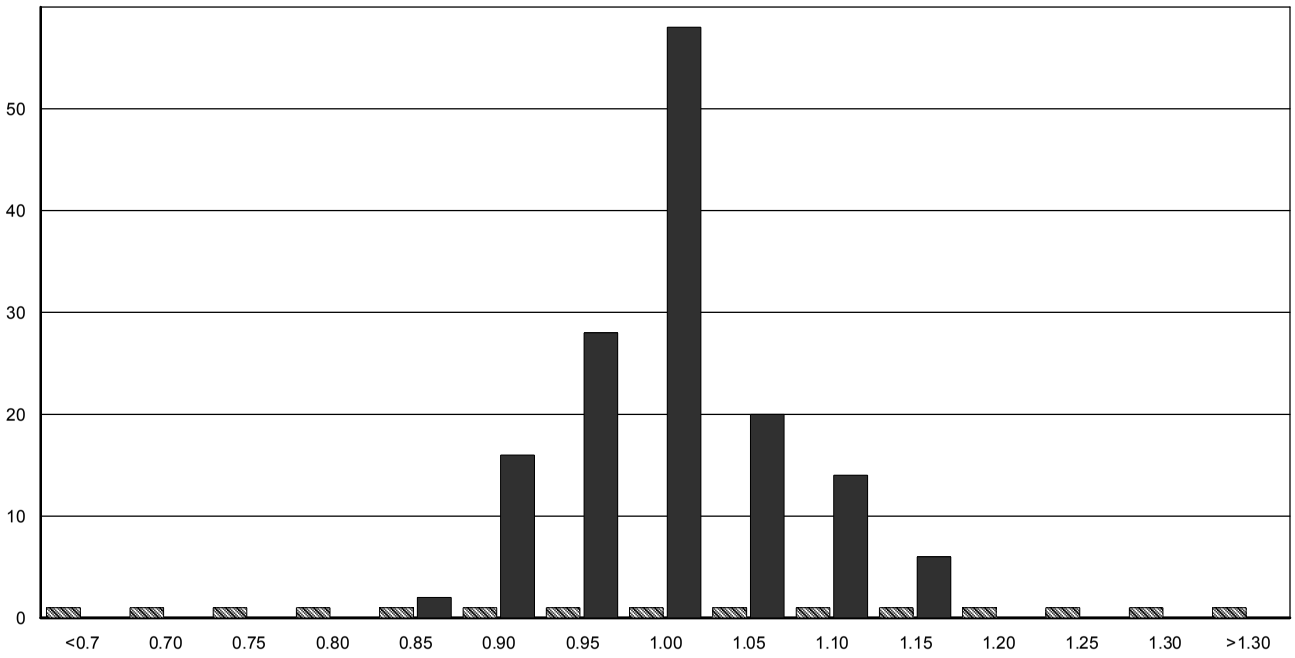

Auburn:Median A/S Ratio by Sale Price

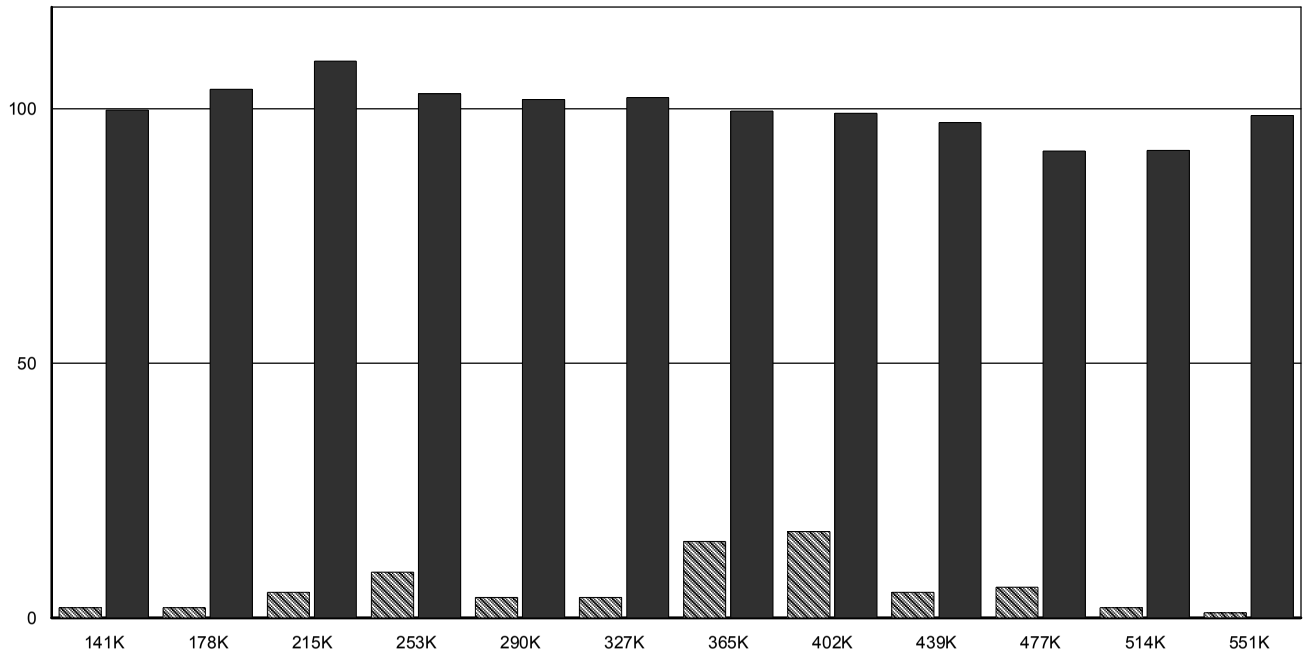

	# of Parcels	Median A/S x 100
141K	2	99.78
178K	2	103.84
215K	5	109.36
253K	9	102.96
290K	4	101.86
327K	4	102.18
365K	15	99.57
402K	17	99.11
439K	5	97.27
477K	6	91.72
514K	2	91.85
551K	1	98.69

Auburn:Median A/S Ratio by Neighborhood

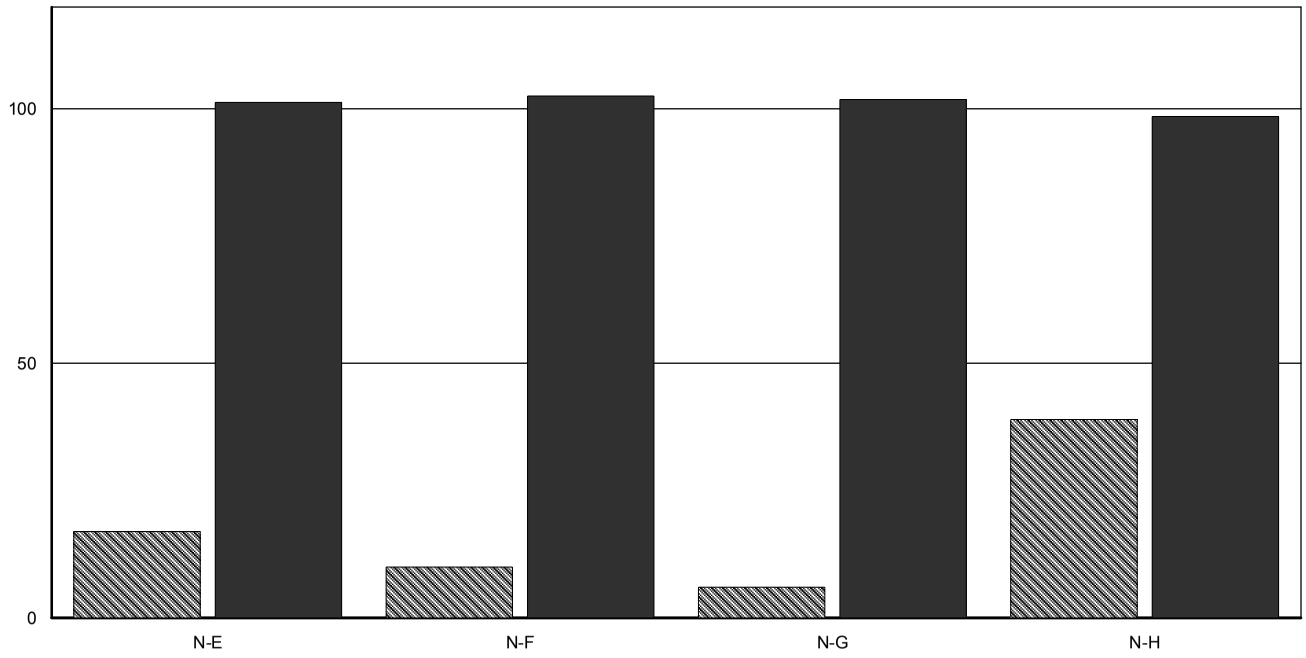

	# of Parcels	Median A/S x 100
N-E	17	101.25
N-F	10	102.54
N-G	6	101.82
N-H	39	98.52

Auburn:Median A/S Ratio by Zone

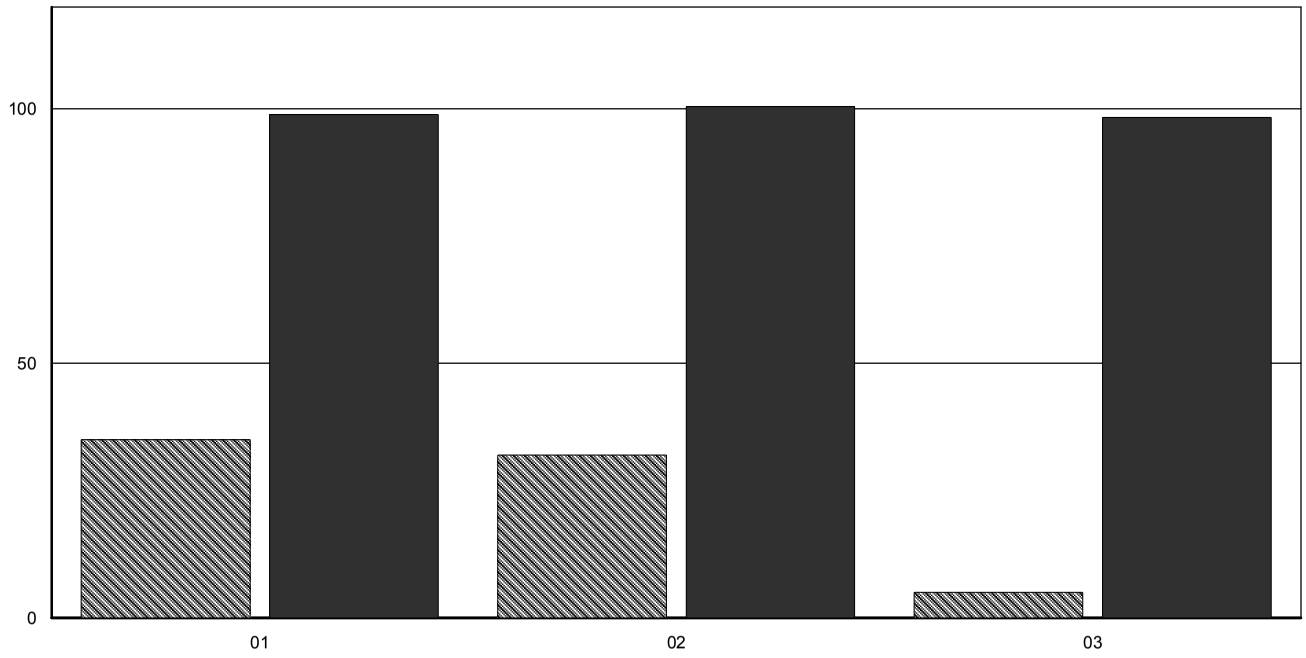

	# of Parcels	Median A/S x 100
01	35	98.86
02	32	100.41
03	5	98.31

Auburn:Median A/S Ratio by Acreage

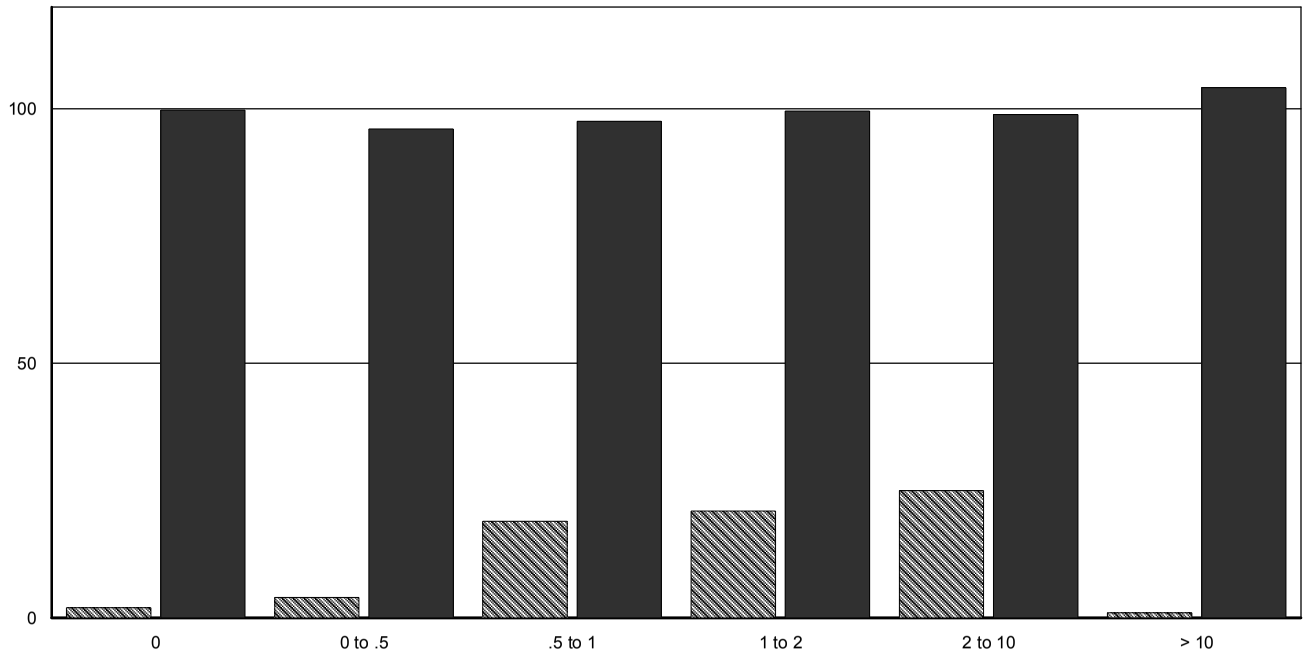

	# of Parcels	Median A/S x 100
0	2	99.78
0 to .5	4	96.01
.5 to 1	19	97.57
1 to 2	21	99.55
2 to 10	25	98.86
> 10	1	104.17

Auburn:Median A/S Ratio by Improved Use

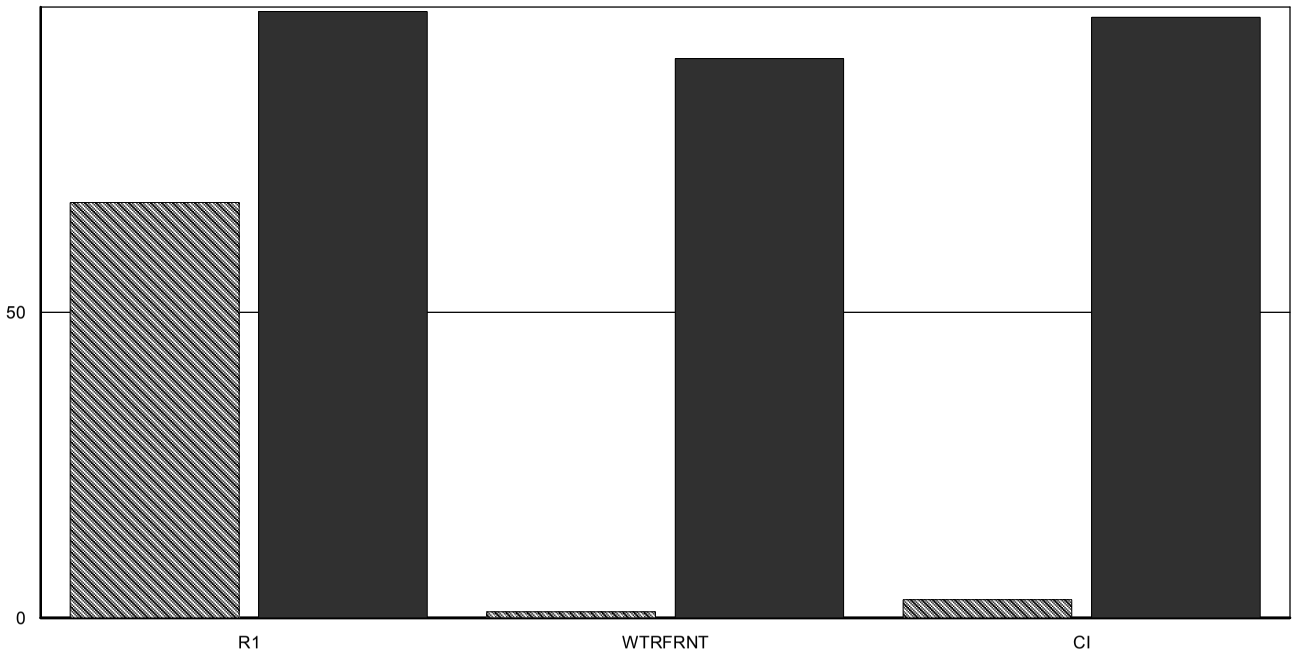

	# of Parcels	Median A/S x 100
R1	68	99.26
WTRFRNT	1	91.55
CI	3	98.31

Auburn:Median A/S Ratio for Views/Waterfront/Other

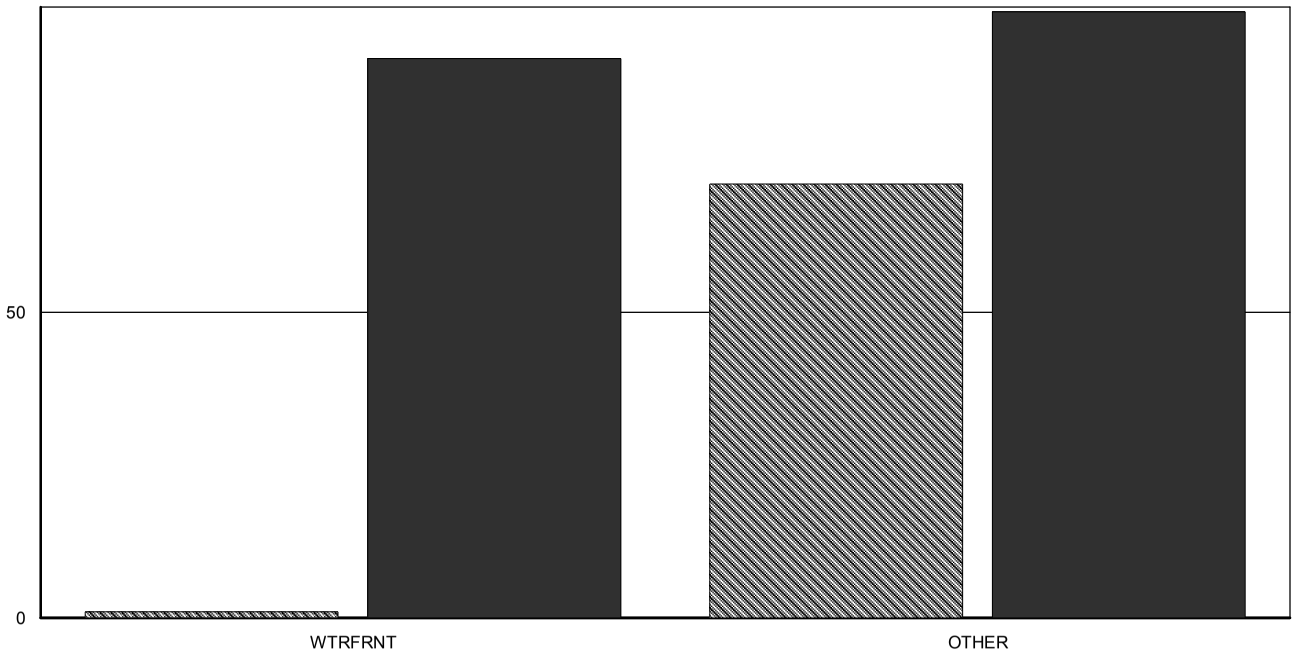

	# of Parcels	Median A/S x 100
WTRFRNT	1	91.55
OTHER	71	99.22

Auburn:Median A/S Ratio by Building Quality

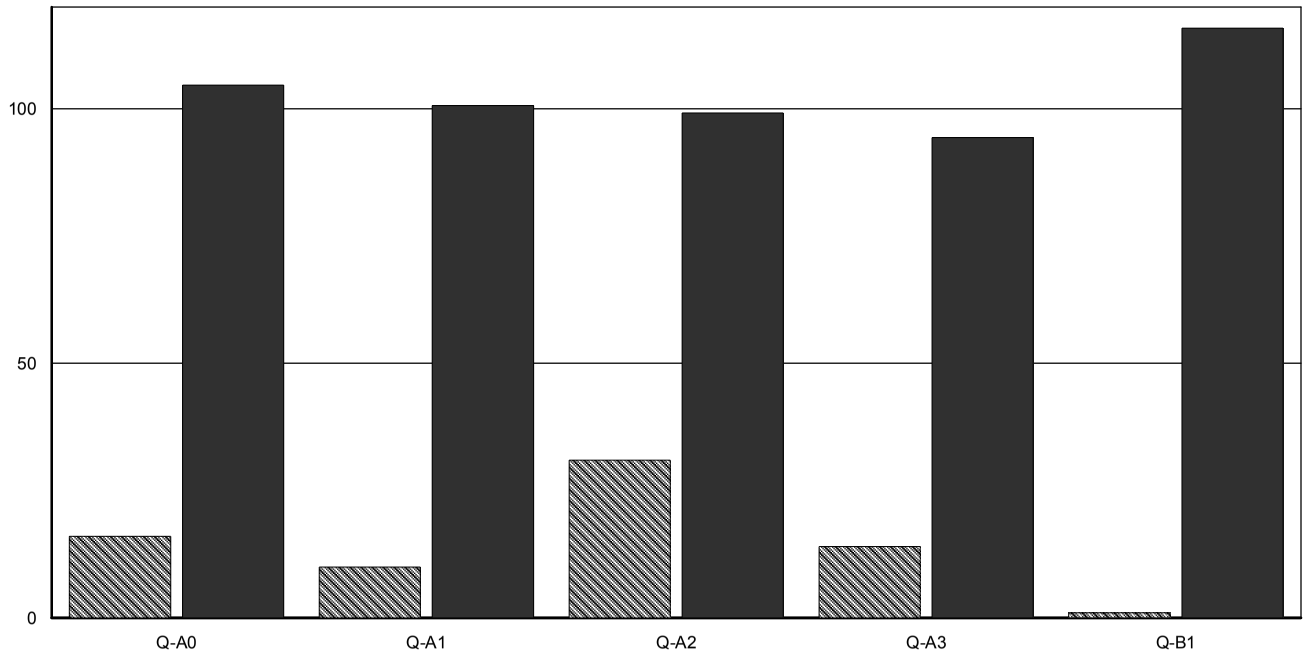

	# of Parcels	Median A/S x 100
Q-A0	16	104.64
Q-A1	10	100.61
Q-A2	31	99.19
Q-A3	14	94.36
Q-B1	1	115.85

OWNER INFORMATION

EQUITY TRUST COMPANY, CUSTODIA
FBO REAL ASHBY IRA
PO BOX 804

AUBURN, NH 03032

SALES HISTORY

Date	Book	Page	Type	Price	Grantor
05/14/2012	5315	2645	Q I	130,000	BYPASS PROPERTIES
08/30/2005	4540	2904	Q I	100,000	ROGERS JEFFERY C

PICTURE

LISTING HISTORY

06/15/11	INSP	MARKED FOR INSPECTION
06/05/11	DMVM	
05/25/10	LMHC	
10/16/07	KCVL	
10/03/07	INSP	MARKED FOR INSPECTION
12/04/02	TMRL	

NOTES

BROWN; WAREHOUSE CONDOS; UNIT #1;10/07 RENTED TO NORTHEAST SCALE, XOB'S ON CARD #1 1-16-23-3; BATHS=2 AVG FOR USE;5/12 SALE 2 UNITS PURCHASED FOR $250,000, $130,000 ALLOCATED TO THIS EXTERIOR UNIT

EXTRA FEATURES VALUATION

Feature Type	Units	Lngth x Width	Size Adj	Rate	Cond	Market Value	Notes
88 PRISCILLA CONDO	1		100	35,000.00	100	35,000	
						35,000	

MUNICIPAL SOFTWARE BY AVITAR

AUBURN ASSESSING OFFICE

PARCEL TOTAL TAXABLE VALUE

Year	Building	Features	Land
2011	$ 95,100	$ 25,000	$ 0
		Parcel Total: $ 120,100	
2013	**$ 92,800**	**$ 35,000**	**$ 0**
		Parcel Total: $ 127,800	

LAND VALUATION

Zone: COMMERCIAL 1 & 2 **Minimum Acreage:** 2.00 **Minimum Frontage:** 200 **Site:** AVERAGE **Driveway:** PAVED **Road:** PAVED

Land Type	Units	Base Rate	NC	Adj	Site	Road	DWay	Topography	Cond	Ad Valorem	SPI	R	Tax Value	Notes
COM/IND	0		E											
	0 ac													

PICTURE

OWNER

EQUITY TRUST COMPANY, CUSTODI
FBO REAL ASHBY IRA
PO BOX 804

AUBURN, NH 03032

TAXABLE DISTRICTS

District	Percentage

PERMITS

Date	Permit ID	Permit Type	Notes

BUILDING DETAILS

Model: **2.00 STORY FRAME WAREHOUSE**
Roof: **FLAT/RUBBER MEMBRANE**
Ext: **CNCRT OR BLK**
Int: **DRYWALL/AVERAGE FOR USE**
Floor: **CARPET/CONCRETE**
Heat: **GAS/FA NO DUCTS**
Bedrooms: Baths: **2.0** Fixtures:
Extra Kitchens: Fireplaces:
A/C: **Yes 100.00 %** Generators:
Quality: **A1 AVG+10**
Com. Wall: **MASONRY, 20 FT.** **1.1680**
Size Adj: **1.4042** Base Rate: **CWH 25.00**
Bldg. Rate: **1.3321**
Sq. Foot Cost: **$ 38.90**

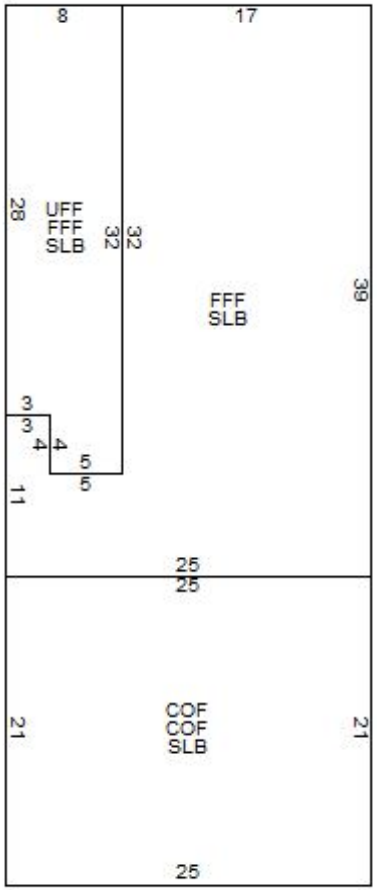

BUILDING SUB AREA DETAILS

ID	Description	Area	Adj.	Effect.
COF	COM OFFICE	1050	1.75	1838
SLB	SLB	1500	0.00	0
FFF	FST FLR FIN	975	1.00	975
UFF	UPPER FLR FIN	244	1.00	244
GLA:	**1,219**	**3,769**		**3,057**

2013 BASE YEAR BUILDING VALUATION

Market Cost New:		**$ 118,917**
Year Built:		**1988**
Condition For Age:	AVERAGE	**20 %**
Physical:		
Functional:	CWE	**2 %**
Economic:		
Temporary:		
Total Depreciation:		**22 %**
Building Value:		**$ 92,800**

OWNER INFORMATION

EQUITY TRUST COMPANY, CUSTODIA
FBO REAL ASHBY IRA
PO BOX 804

AUBURN, NH 03032

SALES HISTORY

Date	Book	Page	Type	Price	Grantor
05/14/2012	5315	2645	Q I	120,000	BYPASS PROPERTIES
08/30/2005	4540	2904	Q I	100,000	ROGERS JEFFERY C

PICTURE

LISTING HISTORY

05/26/10	LMHC	
01/21/10	JBVL	
01/11/10	INSP	MARKED FOR INSPECTION
10/17/07	KCVR	
07/19/05	KCUL	
12/04/02	TMRL	

NOTES

BROWN; WAREHOUSE CONDO; UNIT #2;SAME RENTER AS #1 & 3(NORTHEAST SCALE) NO BTH UNIT 2;BTH 1 & 3; AIR IN OFC & FHA DUCTED;10/07 CHG ROOF DATA; 1/10 NC; BATHS=2 AVG FOR USE; 5/12 SALE FOR $250,000 WITH OTHER UNIT, ALLOCATED $120000 FOR THIS INT UNIT

EXTRA FEATURES VALUATION

Feature Type	Units	Lngth x Width	Size Adj	Rate	Cond	Market Value	Notes
88 PRISCILLA CONDO	1		100	35,000.00	100	35,000	
						35,000	

MUNICIPAL SOFTWARE BY AVITAR

AUBURN ASSESSING OFFICE

PARCEL TOTAL TAXABLE VALUE

Year	Building	Features	Land
2011	$ 88,800	$ 25,000	$ 0
		Parcel Total: $ 113,800	
2013	**$ 86,500**	**$ 35,000**	**$ 0**
		Parcel Total: $ 121,500	

LAND VALUATION

Zone: COMMERCIAL 1 & 2 **Minimum Acreage:** 2.00 **Minimum Frontage:** 200 **Site:** **Driveway:** PAVED **Road:** PAVED

Land Type	Units	Base Rate	NC	Adj	Site	Road	DWay	Topography	Cond	Ad Valorem	SPI	R	Tax Value	Notes
COM/IND	0		E											
	0 ac													

PICTURE

OWNER

EQUITY TRUST COMPANY, CUSTODI
FBO REAL ASHBY IRA
PO BOX 804

AUBURN, NH 03032

TAXABLE DISTRICTS

District	Percentage

PERMITS

Date	Permit ID	Permit Type	Notes

BUILDING DETAILS

Model: **2.00 STORY FRAME WAREHOUSE**
Roof: **FLAT/RUBBER MEMBRANE**
Ext: **CNCRT OR BLK**
Int: **DRYWALL**
Floor: **CARPET/CONCRETE**
Heat: **GAS/FA DUCTED**
Bedrooms: Baths: **2.0** Fixtures:
Extra Kitchens: Fireplaces:
A/C: **No** Generators:
Quality: **A1 AVG+10**
Com. Wall: **MASONRY, 20 FT.** **1.1680**
Size Adj: **1.4773** Base Rate: **CWH 25.00**
Bldg. Rate: **1.4174**
Sq. Foot Cost: **$ 41.39**

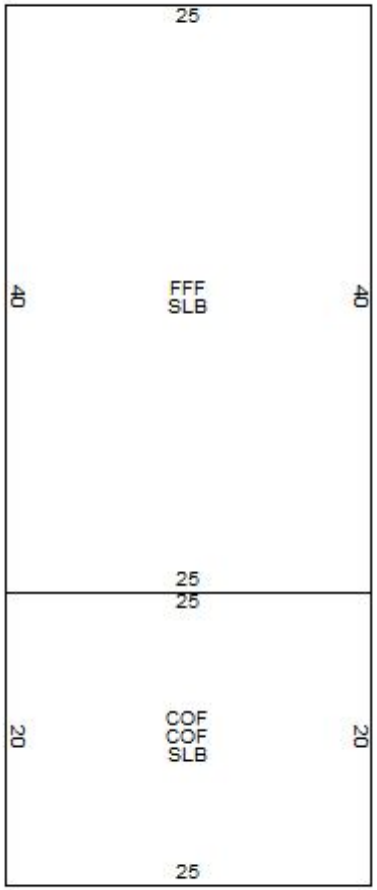

BUILDING SUB AREA DETAILS

ID	Description	Area	Adj.	Effect.
COF	COM OFFICE	1000	1.75	1750
FFF	FST FLR FIN	1000	1.00	1000
SLB	SLB	1500	0.00	0
GLA:	**1,000**	**3,500**		**2,750**

2013 BASE YEAR BUILDING VALUATION

Market Cost New:		**$ 113,823**
Year Built:		**1988**
Condition For Age:	AVERAGE	**20 %**
Physical:		
Functional:	CWI	**4 %**
Economic:		
Temporary:		
Total Depreciation:		**24 %**
Building Value:		**$ 86,500**

OWNER INFORMATION

KITTLE ISAAC
KITTLE ROBIN
42 WESTMINSTER LANE

AUBURN, NH 03032

SALES HISTORY

Date	Book	Page	Type	Price	Grantor
09/17/2012	5356	2664	Q I	395,000	TARNESS MATTHEW
03/27/2012	5300	1440	U I 39		TARNESS CHRISTINA
07/27/2006	4687	890	Q I	429,000	ESPANA BUILDING &

PICTURE

LISTING HISTORY

03/18/13	CRVM	
01/07/10	JBVM	
04/01/09	DMPM	
03/04/09	INSP	MARKED FOR INSPECTION
12/20/05	DSUM	
11/22/04	DSPL	
06/07/04	DWP	
11/25/02	CMRL	

NOTES

CREAM; FPL=GAS;3/09 NOH P/U SHED-CORRECTED SKETCH; 1/10 NOH;3/13 NOH, VLT AREA EST

EXTRA FEATURES VALUATION

Feature Type	Units	Lngth x Width	Size Adj	Rate	Cond	Market Value	Notes
FIREPLACE 1-STAND	1		100	3,000.00	100	3,000	GAS
SHED-WOOD	168	14 x 12	155	3.50	100	911	
WETHERSFIELD	1		100	5,000.00	100	5,000	
						8,900	

MUNICIPAL SOFTWARE BY AVITAR

AUBURN ASSESSING OFFICE

PARCEL TOTAL TAXABLE VALUE

Year	Building	Features	Land
2011	$ 220,100	$ 8,900	$ 179,400
		Parcel Total:	$ 408,400
2013	**$ 199,100**	**$ 8,900**	**$ 183,500**
		Parcel Total:	**$ 391,500**

LAND VALUATION

Zone: RURAL **Minimum Acreage:** 3.00 **Minimum Frontage:** 300 **Site:** AVERAGE **Driveway:** PAVED **Road:** PAVED

Land Type	Units	Base Rate	NC	Adj	Site	Road	DWay	Topography	Cond	Ad Valorem	SPI	R	Tax Value	Notes
1F RES	1.290 ac	141,160	H	130	100	100	100	100 -- LEVEL	100	183,500	0	N	183,500	
	1.290 ac									183,500			**183,500**	

PICTURE

OWNER

KITTLE ISAAC
KITTLE ROBIN
42 WESTMINSTER LANE

AUBURN, NH 03032

TAXABLE DISTRICTS

District	Percentage

PERMITS

Date	Permit ID	Permit Type	Notes
04/28/08	08-069	SHED	TO MEET ALL BUILDING S
05/04/05	05-158	NEW HOME	NEW HOME, 3 BEDROOM,

BUILDING DETAILS

Model: **2.00 STORY FRAME COLONIAL**
Roof: **GABLE OR HIP/ASPHALT**
Ext: **VINYL SIDING**
Int: **DRYWALL**
Floor: **CARPET/HARDWOOD**
Heat: **GAS/FA DUCTED**
Bedrooms: **4** Baths: **3.0** Fixtures:
Extra Kitchens: Fireplaces:
A/C: **Yes 100.00 %** Generators:
Quality: **A2 AVG+20**
Com. Wall:
Size Adj: **0.9219** Base Rate: **RSA 60.00**
Bldg. Rate: **1.1275**
Sq. Foot Cost: **$ 67.65**

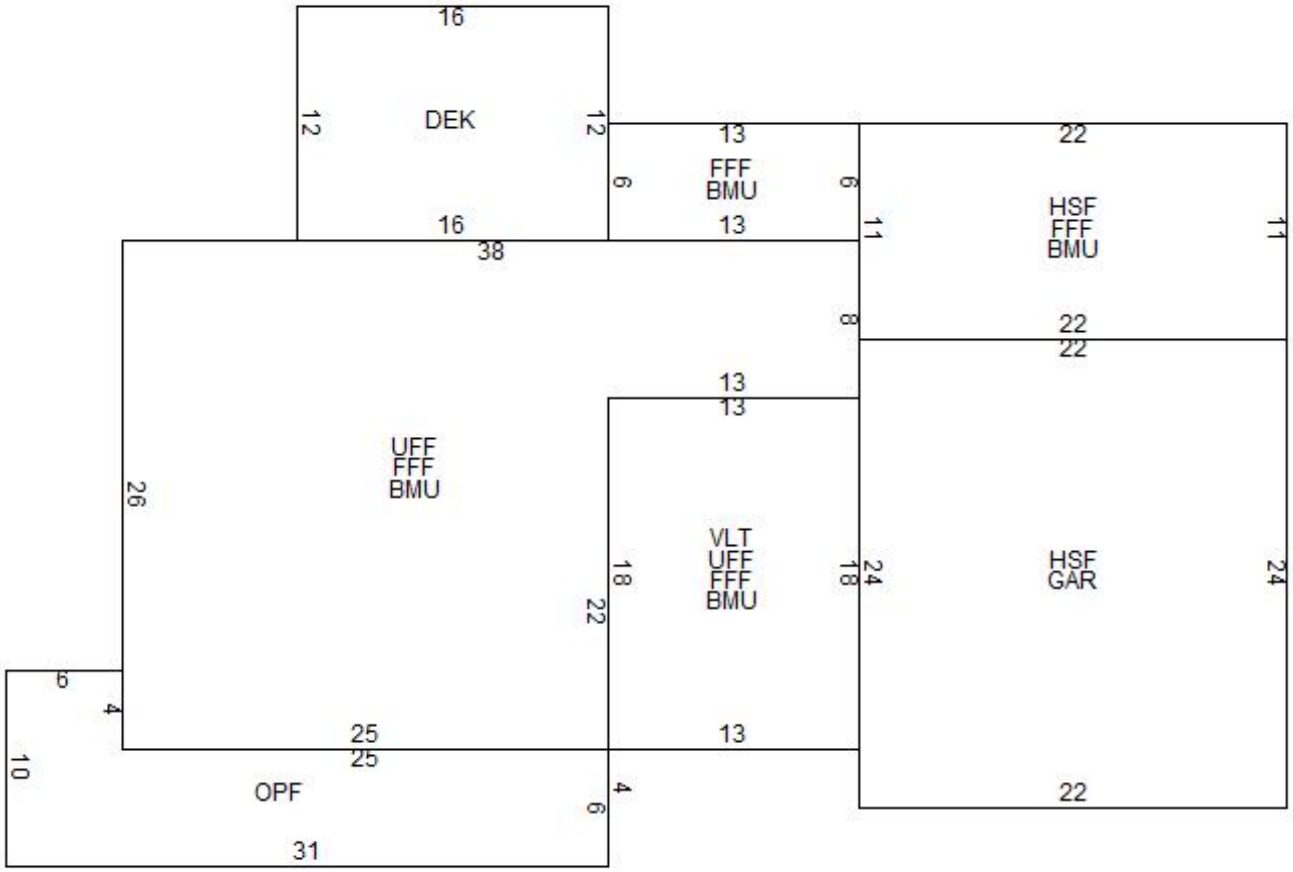

BUILDING SUB AREA DETAILS

ID	Description	Area	Adj.	Effect.
DEK	DECK/ENTRANCE	192	0.10	19
HSF	1/2 STRY FIN	770	0.50	385
GAR	GARAGE	528	0.45	238
OPF	OPEN PORCH	210	0.25	53
FFF	FST FLR FIN	1308	1.00	1308
BMU	BSMNT	1308	0.15	196
UFF	UPPER FLR FIN	988	1.00	988
VLT	VAULTED	234	0.05	12
GLA:	**2,681**	**5,538**		**3,199**

2013 BASE YEAR BUILDING VALUATION

Market Cost New:		**$ 216,412**
Year Built:		**2006**
Condition For Age:	GOOD	**8 %**
Physical:		
Functional:		
Economic:		
Temporary:		
Total Depreciation:		**8 %**
Building Value:		**$ 199,100**

OWNER INFORMATION

HOGAN, MICHAEL P
HOGAN, MELISSA D
58 WINDSOR DRIVE

AUBURN, NH 03032

SALES HISTORY

Date	Book	Page	Type	Price	Grantor
05/24/2013	5442	0136	Q I	368,000	VELAZQUEZ,
06/06/2003	4051	2860	Q I	326,700	ESPANA BUILDING &

PICTURE

LISTING HISTORY

05/25/10	CRHC	
03/29/10	CRCL	
01/11/10	INSP	MARKED FOR INSPECTION
01/07/10	JBVM	
01/12/07	DMPM	
12/01/04	AGRL	
04/13/04	CMPM	
11/25/02	CMRL	

NOTES

BEIGE; 1/07 P/U SHED;REM FLAG; 1/10 NOH; BACKUP GEN INSTALLED; CORRECTED SIZE OF CTH/FFF; 3/10 NO FIN BSMT;

EXTRA FEATURES VALUATION

Feature Type	Units	Lngth x Width	Size Adj	Rate	Cond	Market Value	Notes
FIREPLACE 1-STAND	1		100	3,000.00	100	3,000	GAS
SHED-WOOD	144	12 x 12	171	3.50	100	862	
WETHERSFIELD	1		100	5,000.00	100	5,000	
						8,900	

MUNICIPAL SOFTWARE BY AVITAR

AUBURN ASSESSING OFFICE

PARCEL TOTAL TAXABLE VALUE

Year	Building	Features	Land
2011	$ 188,900	$ 8,900	$ 181,300
		Parcel Total:	$ 379,100
2013	**$ 178,500**	**$ 8,900**	**$ 190,500**
		Parcel Total:	**$ 377,900**

LAND VALUATION

Zone: RURAL **Minimum Acreage:** 3.00 **Minimum Frontage:** 300 **Site:** GOOD **Driveway:** PAVED **Road:** PAVED

Land Type	Units	Base Rate	NC	Adj	Site	Road	DWay	Topography	Cond	Ad Valorem	SPI	R	Tax Value	Notes
1F RES	1.560 ac	142,240	H	130	103	100	100	100 -- LEVEL	100	190,500	0	N	190,500	
	1.560 ac									190,500			**190,500**	

PICTURE

OWNER

HOGAN, MICHAEL P
HOGAN, MELISSA D
58 WINDSOR DRIVE

AUBURN, NH 03032

TAXABLE DISTRICTS

District	Percentage

PERMITS

Date	Permit ID	Permit Type	Notes
10/19/06	06-347	SHED	
02/21/03	03-019	NEW BUILDING	3 BEDROOM NEW HOME (

BUILDING DETAILS

Model: **2.00 STORY FRAME COLONIAL**
Roof: **GABLE OR HIP/ASPHALT**
Ext: **VINYL SIDING**
Int: **DRYWALL**
Floor: **CARPET/HARDWOOD**
Heat: **GAS/FA DUCTED**
Bedrooms: **3** Baths: **2.5** Fixtures: **8**
Extra Kitchens: Fireplaces:
A/C: **Yes 100.00 %** Generators: **1**
Quality: **A2 AVG+20**
Com. Wall:
Size Adj: **0.9443** Base Rate: **RSA 60.00**
Bldg. Rate: **1.1549**
Sq. Foot Cost: **$ 69.30**

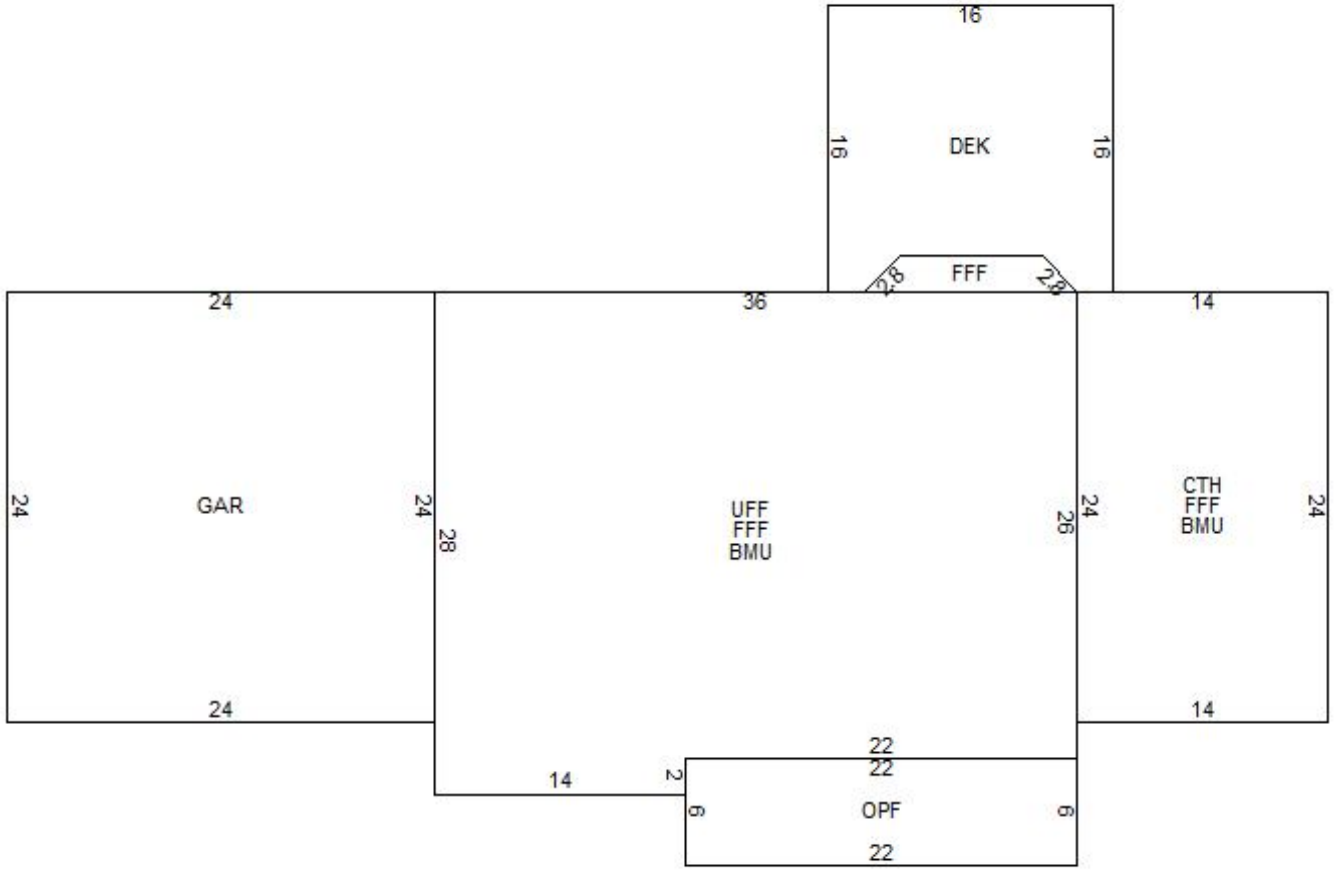

BUILDING SUB AREA DETAILS

ID	Description	Area	Adj.	Effect.
BMU	BSMNT	1300	0.15	195
GAR	GARAGE	576	0.45	259
DEK	DECK/ENTRANCE	256	0.10	26
UFF	UPPER FLR FIN	964	1.00	964
OPF	OPEN PORCH	132	0.25	33
CTH	CATHEDRAL	336	0.10	34
FFF	FST FLR FIN	1320	1.00	1320
GLA:	**2,284**	**4,884**		**2,831**

2013 BASE YEAR BUILDING VALUATION

Market Cost New:		**$ 196,188**
Year Built:		**2003**
Condition For Age:	GOOD	**9 %**
Physical:		
Functional:		
Economic:		
Temporary:		
Total Depreciation:		**9 %**
Building Value:		**$ 178,500**

OWNER INFORMATION

CIAVARRO DOMENIC J

181 WINDSOR DRIVE

AUBURN, NH 03032

SALES HISTORY

Date	Book	Page	Type	Price	Grantor
07/03/2012	5331	2335	Q I	404,000	ESPANA BUILDING &

PICTURE

LISTING HISTORY

03/27/13 DMPR
03/18/13 CRVM
03/21/12 DMPL
04/15/11 DMPL

NOTES

CREAM; 3/12 HSE IS 100% COMPLETED ; TQF MEASURED 15';3/13 NOH P/U A/C & CORRECTED DATA & ADJ SITE;3/13 DRAINAGE ALONG RIGHT SIDE OF PROPERTY, NOH - NC;

EXTRA FEATURES VALUATION

Feature Type	Units	Lngth x Width	Size Adj	Rate	Cond	Market Value	Notes
FIREPLACE 1-STAND	1		100	3,000.00	100	3,000	GAS
WETHERSFIELD	1		100	5,000.00	100	5,000	
						8,000	

MUNICIPAL SOFTWARE BY AVITAR

AUBURN ASSESSING OFFICE

PARCEL TOTAL TAXABLE VALUE

Year	Building	Features	Land
2011	$ 0	$ 0	$ 152,300
		Parcel Total:	$ 152,300
2013	**$ 207,900**	**$ 8,000**	**$ 182,200**
		Parcel Total:	**$ 398,100**

LAND VALUATION

Zone: RURAL **Minimum Acreage:** 3.00 **Minimum Frontage:** 300 **Site:** AVERAGE **Driveway:** PAVED **Road:** PAVED

Land Type	Units	Base Rate	NC	Adj	Site	Road	DWay	Topography	Cond	Ad Valorem	SPI	R	Tax Value	Notes
1F RES	1.030 ac	140,120	H	130	100	100	100	100 -- LEVEL	100	182,200	0	N	182,200	
	1.030 ac									182,200			**182,200**	

PICTURE

OWNER

CIAVARRO DOMENIC J

181 WINDSOR DRIVE

AUBURN, NH 03032

TAXABLE DISTRICTS

District	Percentage

PERMITS

Date	Permit ID	Permit Type	Notes
03/20/12	12-097	NEW HOME	MODIFY BUILDING PERM
03/03/11	11-060	NEW HOME	UNFINISHED BONUS ROO

BUILDING DETAILS

Model: **1.75 STORY FRAME COLONIAL**
Roof: **GABLE OR HIP/ASPHALT**
Ext: **VINYL SIDING**
Int: **DRYWALL**
Floor: **HARDWOOD/CARPET**
Heat: **GAS/FA DUCTED**
Bedrooms: **3** Baths: **2.5** Fixtures: **10**
Extra Kitchens: Fireplaces:
A/C: **Yes 100.00 %** Generators:
Quality: **A2 AVG+20**
Com. Wall:
Size Adj: **0.9219** Base Rate: **RSA 60.00**
Bldg. Rate: **1.1167**
Sq. Foot Cost: **$ 67.00**

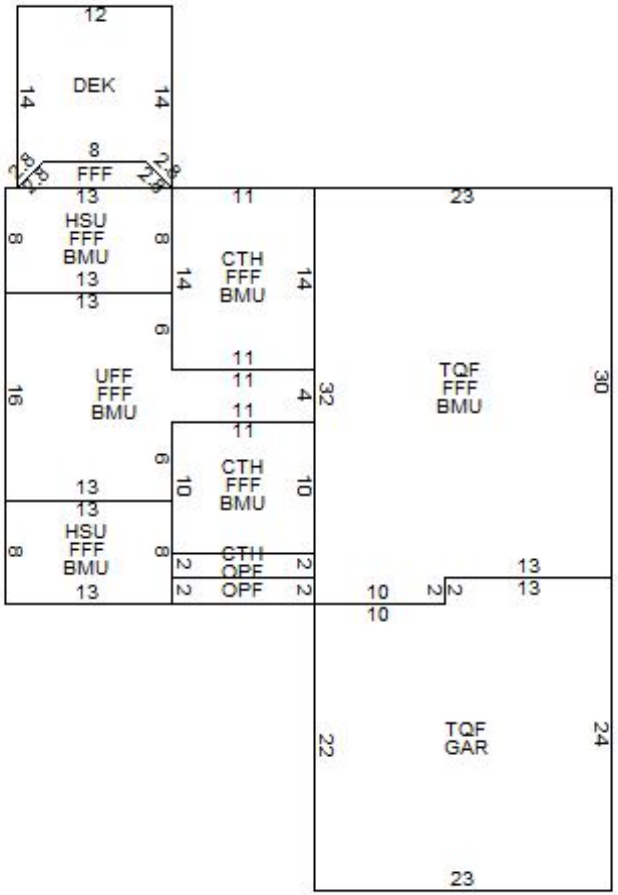

BUILDING SUB AREA DETAILS

ID	Description	Area	Adj.	Effect.
HSU	1/2 STRY UNFIN	208	0.25	52
BMU	BSMNT	1434	0.15	215
GAR	GARAGE	532	0.45	239
UFF	UPPER FLR FIN	252	1.00	252
CTH	CATHEDRAL	286	0.10	29
TQF	3/4 STRY FIN	1242	0.75	932
DEK	DECK/ENTRANCE	148	0.10	15
FFF	FST FLR FIN	1454	1.00	1454
OPF	OPEN PORCH	44	0.25	11
GLA:	**2,638**	**5,600**		**3,199**

2013 BASE YEAR BUILDING VALUATION

Market Cost New:		**$ 214,333**
Year Built:		**2011**
Condition For Age:	AVERAGE	**3 %**
Physical:		
Functional:		
Economic:		
Temporary:		
Total Depreciation:		**3 %**
Building Value:		**$ 207,900**

OWNER INFORMATION

GORDON JAMES R
GORDON KRISTEN
214 STEAM MILL ROAD

AUBURN, NH 03032

SALES HISTORY

Date	Book	Page	Type	Price	Grantor
04/25/2012	5309	1373	Q I	425,000	KLEIN EDWARD E
11/03/2009	5063	1256	Q I	430,400	ESPANA BUILDING &

PICTURE

LISTING HISTORY

03/22/13	CRVM
04/02/10	CRVL
01/08/10	JBVL
12/18/07	KCPM
04/10/07	KCPL

NOTES

WHITE; 3/13 NOH - NC;

EXTRA FEATURES VALUATION

Feature Type	Units	Lngth x Width	Size Adj	Rate	Cond	Market Value	Notes
FIREPLACE 1-STAND	1		100	3,000.00	100	3,000	GAS
SHED-WOOD	216	12 x 18	134	3.50	100	1,013	
WETHERSFIELD	1		100	5,000.00	100	5,000	
						9,000	

MUNICIPAL SOFTWARE BY AVITAR

AUBURN ASSESSING OFFICE

PARCEL TOTAL TAXABLE VALUE

Year	Building	Features	Land
2011	$ 241,800	$ 9,000	$ 186,500
		Parcel Total:	$ 437,300
2013	**$ 222,000**	**$ 9,000**	**$ 182,400**
		Parcel Total:	**$ 413,400**

LAND VALUATION

Zone: RURAL **Minimum Acreage:** 3.00 **Minimum Frontage:** 300 **Site:** AVERAGE **Driveway:** PAVED **Road:** PAVED

Land Type	Units	Base Rate	NC	Adj	Site	Road	DWay	Topography	Cond	Ad Valorem	SPI	R	Tax Value	Notes
1F RES	1.080 ac	140,320	H	130	100	100	100	100 -- LEVEL	100	182,400	0	N	182,400	
	1.080 ac									182,400			**182,400**	

PICTURE

OWNER

GORDON JAMES R
GORDON KRISTEN
214 STEAM MILL ROAD

AUBURN, NH 03032

TAXABLE DISTRICTS

District	Percentage

PERMITS

Date	Permit ID	Permit Type	Notes
11/25/09	09-266	SHED	TO COMPLY WITH ZONIN
02/20/07	07-040	NEW HOME	INCLUDES ALL FEES - SUI

BUILDING DETAILS

Model: **2.00 STORY FRAME COLONIAL**
Roof: **GABLE OR HIP/ASPHALT**
Ext: **VINYL SIDING**
Int: **DRYWALL**
Floor: **CARPET/HARDWOOD**
Heat: **GAS/FA DUCTED**
Bedrooms: **3** Baths: **2.5** Fixtures: **10**
Extra Kitchens: Fireplaces:
A/C: **Yes 100.00 %** Generators:
Quality: **A3 AVG+30**
Com. Wall:
Size Adj: **0.9140** Base Rate: **RSA 60.00**
Bldg. Rate: **1.1994**
Sq. Foot Cost: **$ 71.96**

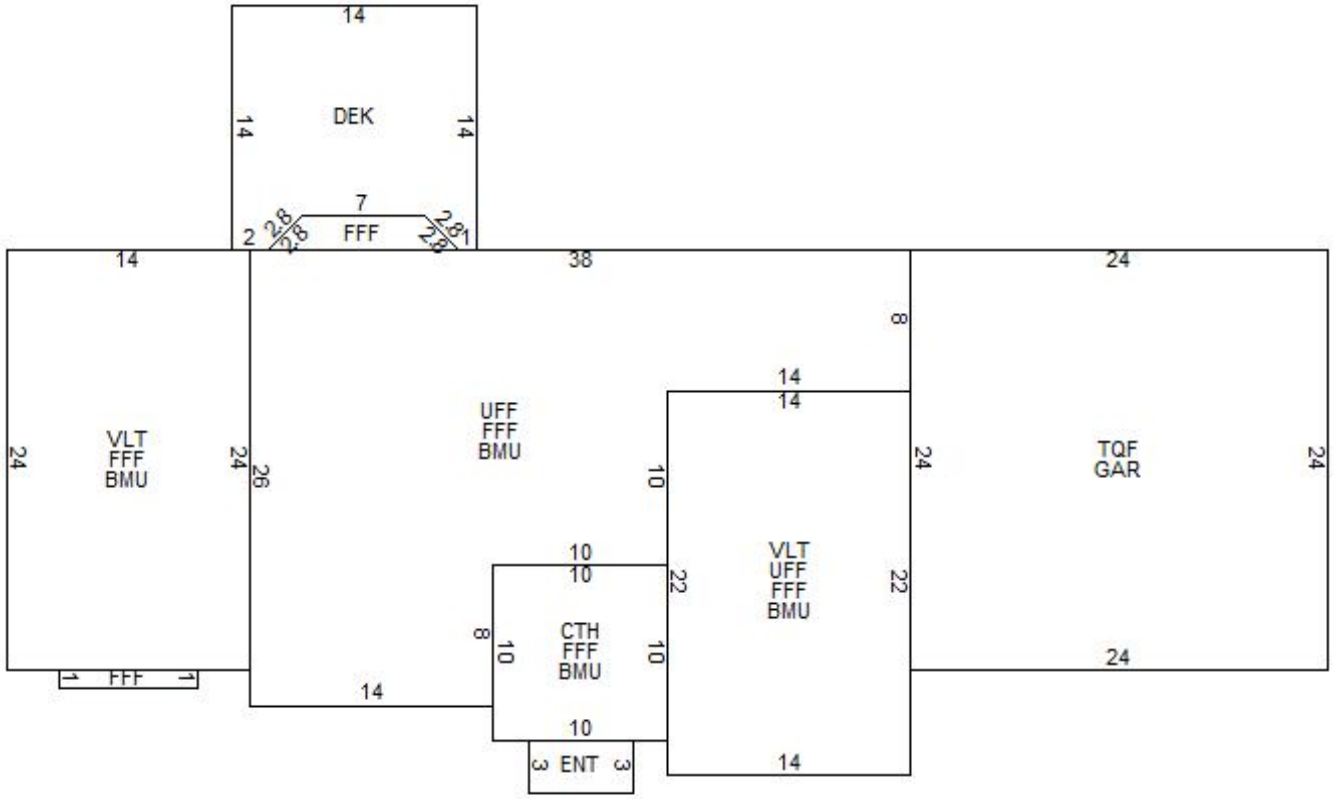

BUILDING SUB AREA DETAILS

ID	Description	Area	Adj.	Effect.
TQF	3/4 STRY FIN	576	0.75	432
GAR	GARAGE	576	0.45	259
VLT	VAULTED	644	0.05	32
UFF	UPPER FLR FIN	964	1.00	964
FFF	FST FLR FIN	1426	1.00	1426
BMU	BSMNT	1400	0.15	210
CTH	CATHEDRAL	100	0.10	10
ENT	ENTRANCE	18	0.10	2
DEK	DECK/ENTRANCE	178	0.10	18
GLA:	**2,822**	**5,882**		**3,353**

2013 BASE YEAR BUILDING VALUATION

Market Cost New:		**$ 241,282**
Year Built:		**2007**
Condition For Age:	GOOD	**8 %**
Physical:		
Functional:		
Economic:		
Temporary:		
Total Depreciation:		**8 %**
Building Value:		**$ 222,000**

OWNER INFORMATION

OLIVEIRA DAVID P
OLIVEIRA SHANNON
30 WESTFORD DRIVE

AUBURN, NH 03032

SALES HISTORY

Date	Book	Page	Type	Price	Grantor
03/18/2013	5419	1700	Q I	395,000	LIMA ROBERT
04/15/2005	4466	1533	Q I	450,933	ESPANA BUILDING

PICTURE

LISTING HISTORY

01/07/10	JBVM	
04/01/09	DMPR	
03/04/09	INSP	MARKED FOR INSPECTION
12/18/07	KCPL	
04/10/07	KCPL	
06/22/06	BHUR	
12/20/05	DSPR	
03/31/05	DSPL	

NOTES

BEIGE; FPL = GAS; 4/9 NOH-EST BMST 100% COMPLETE REMOVE FLAG; 1/10 NOH; PU 2 DEKS;

EXTRA FEATURES VALUATION

Feature Type	Units	Lngth x Width	Size Adj	Rate	Cond	Market Value	Notes
FIREPLACE 1-STAND	1		100	3,000.00	100	3,000	
POOL-ABOVE GROUND	512	32 x 16	91	3.00	100	1,398	
DECK	210	1 x 210	136	7.00	100	1,999	EST DUE TO SHAPE
WETHERSFIELD	1		100	5,000.00	100	5,000	
						11,400	

MUNICIPAL SOFTWARE BY AVITAR

AUBURN ASSESSING OFFICE

PARCEL TOTAL TAXABLE VALUE

Year	Building	Features	Land
2011	$ 241,100	$ 11,400	$ 187,300
		Parcel Total:	$ 439,800
2013	**$ 218,800**	**$ 11,400**	**$ 164,700**
		Parcel Total:	**$ 394,900**

LAND VALUATION

Zone: RURAL **Minimum Acreage:** 3.00 **Minimum Frontage:** 300 **Site:** AVERAGE **Driveway:** PAVED **Road:** PAVED

Land Type	Units	Base Rate	NC	Adj	Site	Road	DWay	Topography	Cond	Ad Valorem	SPI	R	Tax Value	Notes
1F RES	1.200 ac	140,800	H	130	100	100	100	90 -- ROLLING	100	164,700	0	N	164,700	
	1.200 ac									164,700			**164,700**	

PICTURE

OWNER

OLIVEIRA DAVID P
OLIVEIRA SHANNON
30 WESTFORD DRIVE

AUBURN, NH 03032

TAXABLE DISTRICTS

District	Percentage

PERMITS

Date	Permit ID	Permit Type	Notes
04/21/09	09-041	DECK	POOL BARRIERS TO BE IN
05/29/07	07-122	POOL	INSTALLATION 16 X 32 AE
01/30/07	07-027	REMODEL	
12/30/04	04-560	NEW HOME	3 BDRM, 2 CAR, NEW HOM

BUILDING DETAILS

Model: **2.00 STORY FRAME COLONIAL**
Roof: **GABLE OR HIP/ASPHALT**
Ext: **VINYL SIDING**
Int: **DRYWALL**
Floor: **CARPET/LINOLEUM/VINYL**
Heat: **GAS/FA DUCTED**
Bedrooms: **3** Baths: **2.5** Fixtures:
Extra Kitchens: Fireplaces:
A/C: **Yes 100.00 %** Generators:
Quality: **A3 AVG+30**
Com. Wall:
Size Adj: **0.9109** Base Rate: **RSA 60.00**
Bldg. Rate: **1.1721**
Sq. Foot Cost: **$ 70.33**

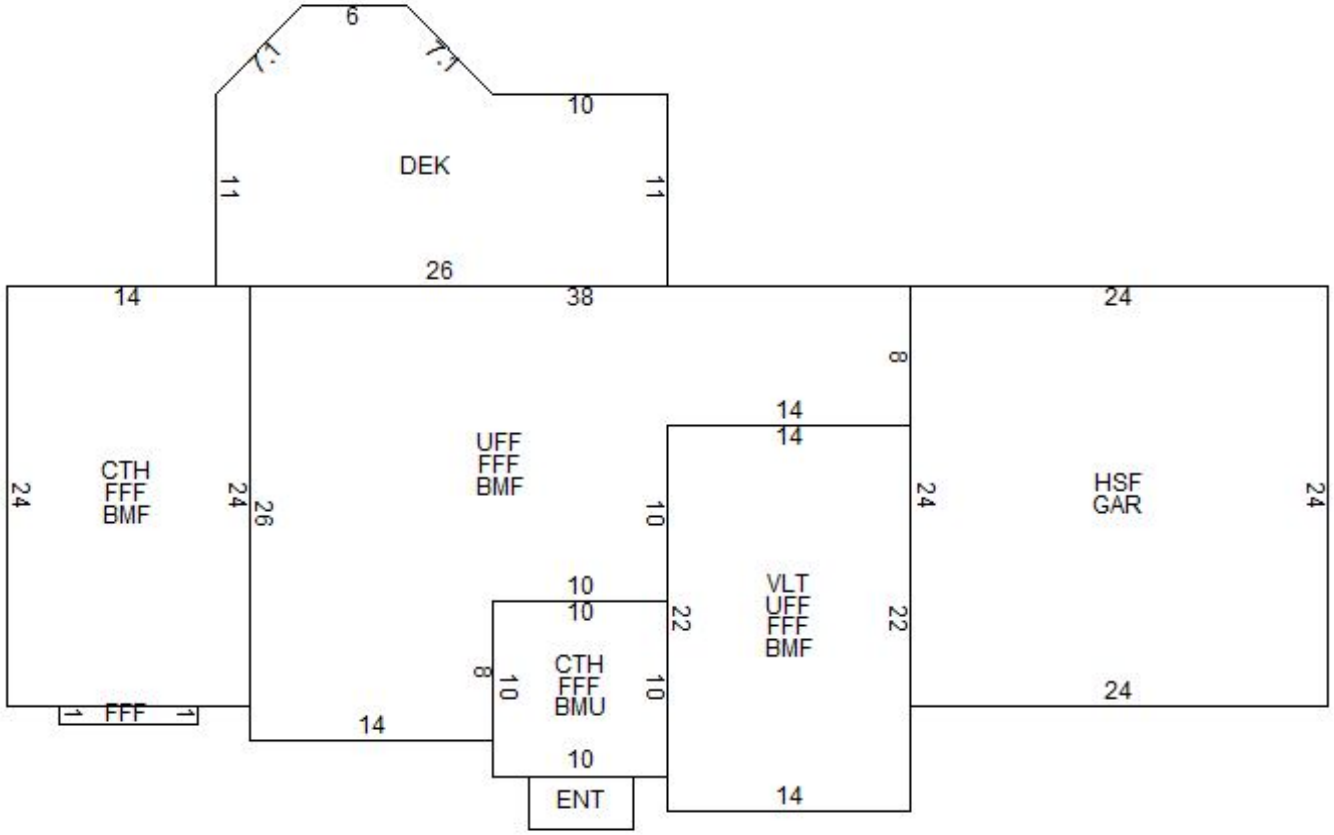

BUILDING SUB AREA DETAILS

ID	Description	Area	Adj.	Effect.
UFF	UPPER FLR FIN	964	1.00	964
FFF	FST FLR FIN	1408	1.00	1408
BMF	BSMNT FINISHED	1300	0.30	390
CTH	CATHEDRAL	436	0.10	44
ENT	ENTRANCE	18	0.10	2
HSF	1/2 STRY FIN	576	0.50	288
GAR	GARAGE	576	0.45	259
DEK	DECK/ENTRANCE	341	0.10	34
BMU	BSMNT	100	0.15	15
VLT	VAULTED	308	0.05	15
GLA:	**2,660**	**6,027**		**3,419**

2013 BASE YEAR BUILDING VALUATION

Market Cost New:		**$ 240,458**
Year Built:		**2005**
Condition For Age:	GOOD	**9 %**
Physical:		
Functional:		
Economic:		
Temporary:		
Total Depreciation:		**9 %**
Building Value:		**$ 218,800**

OWNER INFORMATION

TRINGALE JOSEPH L
TRINGALE LAUREEN P
80 STEAM MILL ROAD

AUBURN, NH 03032

SALES HISTORY

Date	Book	Page	Type	Price	Grantor
01/29/2013	5403	2024	Q I	340,352	ESPANA BUILDING &

PICTURE

LISTING HISTORY

03/27/13 DMPM
04/01/10 LMUL

NOTES

WHT; INFO FROM H/O (MRS) OUTSIDE, HSE IS 100% COMPLETED, FLAG 2014 FOR LANDSCAPING & A/C;

EXTRA FEATURES VALUATION

Feature Type	Units	Lngth x Width	Size Adj	Rate	Cond	Market Value	Notes
WETHERSFIELD	1		100	5,000.00	100	5,000	
FIREPLACE 1-STAND	1		100	3,000.00	100	3,000	GAS
SHED-WOOD	128	8 x 16	185	3.50	100	829	EST ON REVIEW
						8,800	

MUNICIPAL SOFTWARE BY AVITAR

AUBURN ASSESSING OFFICE

PARCEL TOTAL TAXABLE VALUE

Year	Building	Features	Land
2011	$ 0	$ 0	$ 132
		Parcel Total:	$ 132
2013	**$ 152,800**	**$ 8,800**	**$ 173,700**
		Parcel Total:	**$ 335,300**

LAND VALUATION

Zone: RURAL **Minimum Acreage:** 3.00 **Minimum Frontage:** 300 **Site:** AVERAGE **Driveway:** PAVED **Road:** PAVED

Land Type	Units	Base Rate	NC	Adj	Site	Road	DWay	Topography	Cond	Ad Valorem	SPI	R	Tax Value	Notes
1F RES	1.160 ac	140,640	H	130	100	100	100	95 -- MILD	100	173,700	0	N	173,700	
	1.160 ac									173,700			**173,700**	

PICTURE

OWNER

TRINGALE JOSEPH L
TRINGALE LAUREEN P
80 STEAM MILL ROAD

AUBURN, NH 03032

TAXABLE DISTRICTS

District	Percentage

PERMITS

Date	Permit ID	Permit Type	Notes
04/15/13	13-201	SHED	REEDS FERRY
11/05/12	12-506	NEW HOME	SUBCONTRACTORS TO SE

BUILDING DETAILS

Model: **2.00 STORY FRAME COLONIAL**
Roof: **GABLE OR HIP/ASPHALT**
Ext: **VINYL SIDING**
Int: **DRYWALL**
Floor: **HARDWOOD/CARPET**
Heat: **GAS/FA DUCTED**
Bedrooms: **3** Baths: **2.5** Fixtures: **8**
Extra Kitchens: Fireplaces:
A/C: **No** Generators:
Quality: **A2 AVG+20**
Com. Wall:
Size Adj: **0.9920** Base Rate: **RSA 60.00**
Bldg. Rate: **1.1433**
Sq. Foot Cost: **$ 68.60**

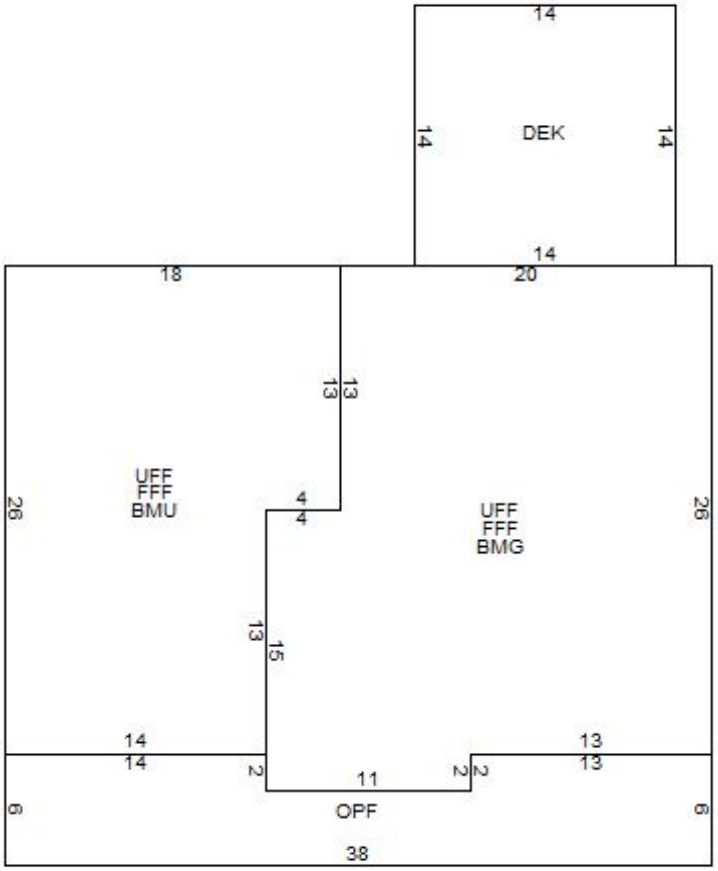

BUILDING SUB AREA DETAILS

ID	Description	Area	Adj.	Effect.
OPF	OPEN PORCH	206	0.25	52
BMG	BASEMENT	594	0.20	119
DEK	DECK/ENTRANCE	196	0.10	20
UFF	UPPER FLR FIN	1010	1.00	1010
FFF	FST FLR FIN	1010	1.00	1010
BMU	BSMNT	416	0.15	62
GLA:	**2,020**	**3,432**		**2,273**

2013 BASE YEAR BUILDING VALUATION

Market Cost New:		**$ 155,928**
Year Built:		**2012**
Condition For Age:	AVERAGE	**2 %**
Physical:		
Functional:		
Economic:		
Temporary:		
Total Depreciation:		**2 %**
Building Value:		**$ 152,800**

OWNER INFORMATION

LABRECQUE RONJA N

72 STEAM MILL ROAD

AUBURN, NH 03032

SALES HISTORY

Date	Book	Page	Type	Price	Grantor
10/12/2012	5366	774	Q I	330,533	ESPANA BUILDING &

PICTURE

LISTING HISTORY

03/18/13 CRVM
04/01/10 LMUL

NOTES

CREAM; 3/13 NOH - WOB;

EXTRA FEATURES VALUATION

Feature Type	Units	Lngth x Width	Size Adj	Rate	Cond	Market Value	Notes
WETHERSFIELD	1		100	5,000.00	100	5,000	
FIREPLACE 1-STAND	1		100	3,000.00	100	3,000	GAS
						8,000	

MUNICIPAL SOFTWARE BY AVITAR

AUBURN ASSESSING OFFICE

PARCEL TOTAL TAXABLE VALUE

Year	Building	Features	Land
2011	$ 0	$ 0	$ 135
		Parcel Total:	$ 135
2013	**$ 161,200**	**$ 8,000**	**$ 173,800**
		Parcel Total:	**$ 343,000**

LAND VALUATION

Zone: RURAL **Minimum Acreage:** 3.00 **Minimum Frontage:** 300 **Site:** AVERAGE **Driveway:** PAVED **Road:** PAVED

Land Type	Units	Base Rate	NC	Adj	Site	Road	DWay	Topography	Cond	Ad Valorem	SPI	R	Tax Value	Notes
1F RES	1.180 ac	140,720	H	130	100	100	100	95 -- MILD	100	173,800	0	N	173,800	
	1.180 ac									173,800			**173,800**	

PICTURE

OWNER

LABRECQUE RONJA N

72 STEAM MILL ROAD

AUBURN, NH 03032

TAXABLE DISTRICTS

District	Percentage

PERMITS

Date	Permit ID	Permit Type	Notes
06/21/12	12-253	NEW HOME	UNFINISHED BASEMENT,

BUILDING DETAILS

Model: **2.00 STORY FRAME COLONIAL**
Roof: **GABLE OR HIP/ASPHALT**
Ext: **VINYL SIDING**
Int: **DRYWALL**
Floor: **HARDWOOD/CARPET**
Heat: **GAS/FA DUCTED**
Bedrooms: **4** Baths: **2.5** Fixtures: **9**
Extra Kitchens: Fireplaces: **1**
A/C: **No** Generators:
Quality: **A2 AVG+20**
Com. Wall:
Size Adj: **0.9816** Base Rate: **RSA 60.00**
Bldg. Rate: **1.1544**
Sq. Foot Cost: **$ 69.26**

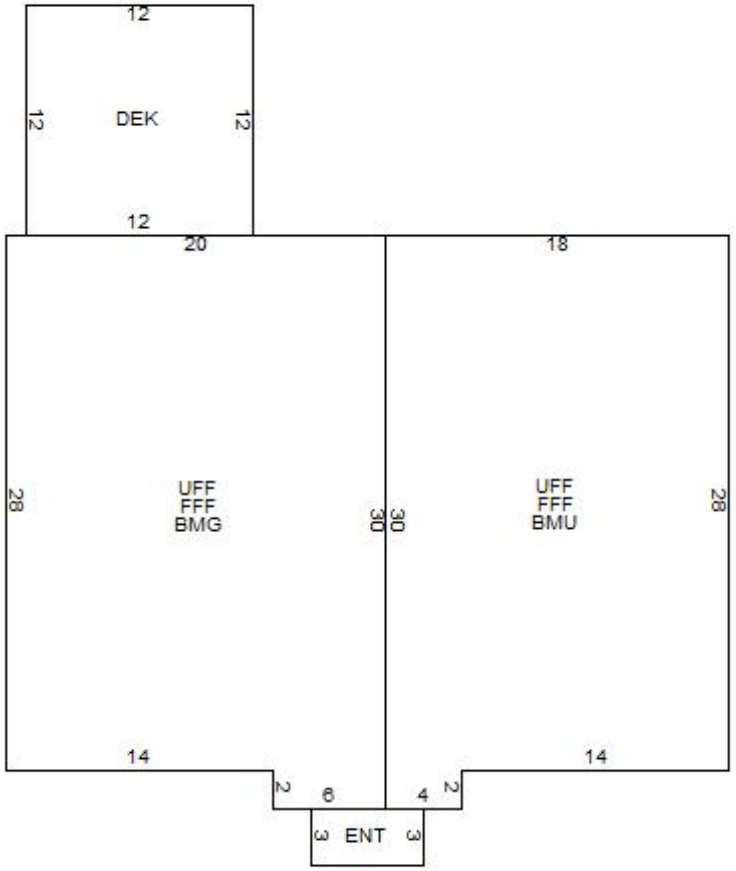

BUILDING SUB AREA DETAILS

ID	Description	Area	Adj.	Effect.
ENT	ENTRANCE	18	0.10	2
UFF	UPPER FLR FIN	1084	1.00	1084
FFF	FST FLR FIN	1084	1.00	1084
BMG	BASEMENT	572	0.20	114
DEK	DECK/ENTRANCE	144	0.10	14
BMU	BSMNT	512	0.15	77
GLA:	**2,168**	**3,414**		**2,375**

2013 BASE YEAR BUILDING VALUATION

Market Cost New:		**$ 164,493**
Year Built:		**2012**
Condition For Age:	AVERAGE	**2 %**
Physical:		
Functional:		
Economic:		
Temporary:		
Total Depreciation:		**2 %**
Building Value:		**$ 161,200**

OWNER INFORMATION

MACPHEE SEAN P
MACPHEE LISA M
64 STEAM MILL ROAD

AUBURN, NH 03032

SALES HISTORY

Date	Book	Page	Type	Price	Grantor
01/14/2013	5398	2175	Q I	340,000	ESPANA BUILDING &

PICTURE

LISTING HISTORY

03/18/13 CRVM

NOTES

3/13 SPOKE W/OWNER IN DRIVEWAY,

EXTRA FEATURES VALUATION

Feature Type	Units	Lngth x Width	Size Adj	Rate	Cond	Market Value	Notes
WETHERSFIELD	1		100	5,000.00	100	5,000	
FIREPLACE 1-STAND	1		100	3,000.00	100	3,000	GAS
						8,000	

MUNICIPAL SOFTWARE BY AVITAR

AUBURN ASSESSING OFFICE

PARCEL TOTAL TAXABLE VALUE

Year	Building	Features	Land
2011	$ 0	$ 0	$ 157
		Parcel Total:	$ 157
2013	**$ 161,200**	**$ 8,000**	**$ 174,800**
		Parcel Total:	**$ 344,000**

LAND VALUATION

Zone: RURAL **Minimum Acreage:** 3.00 **Minimum Frontage:** 300 **Site:** AVERAGE **Driveway:** PAVED **Road:** PAVED

Land Type	Units	Base Rate	NC	Adj	Site	Road	DWay	Topography	Cond	Ad Valorem	SPI	R	Tax Value	Notes
1F RES	1.380 ac	141,520	H	130	100	100	100	95 -- MILD	100	174,800	0	N	174,800	
	1.380 ac									174,800			**174,800**	

PICTURE

OWNER

MACPHEE SEAN P
MACPHEE LISA M
64 STEAM MILL ROAD

AUBURN, NH 03032

TAXABLE DISTRICTS

District	Percentage

PERMITS

Date	Permit ID	Permit Type	Notes
09/04/12	12-394	NEW HOME	SUBCONTRACTORS TO SE

BUILDING DETAILS

Model: **2.00 STORY FRAME COLONIAL**
Roof: **GABLE OR HIP/ASPHALT**
Ext: **VINYL SIDING**
Int: **DRYWALL**
Floor: **HARDWOOD/CARPET**
Heat: **GAS/FA DUCTED**
Bedrooms: **4** Baths: **2.5** Fixtures: **10**
Extra Kitchens: Fireplaces: **1**
A/C: **No** Generators:
Quality: **A2 AVG+20**
Com. Wall:
Size Adj: **0.9816** Base Rate: **RSA 60.00**
Bldg. Rate: **1.1544**
Sq. Foot Cost: **$ 69.26**

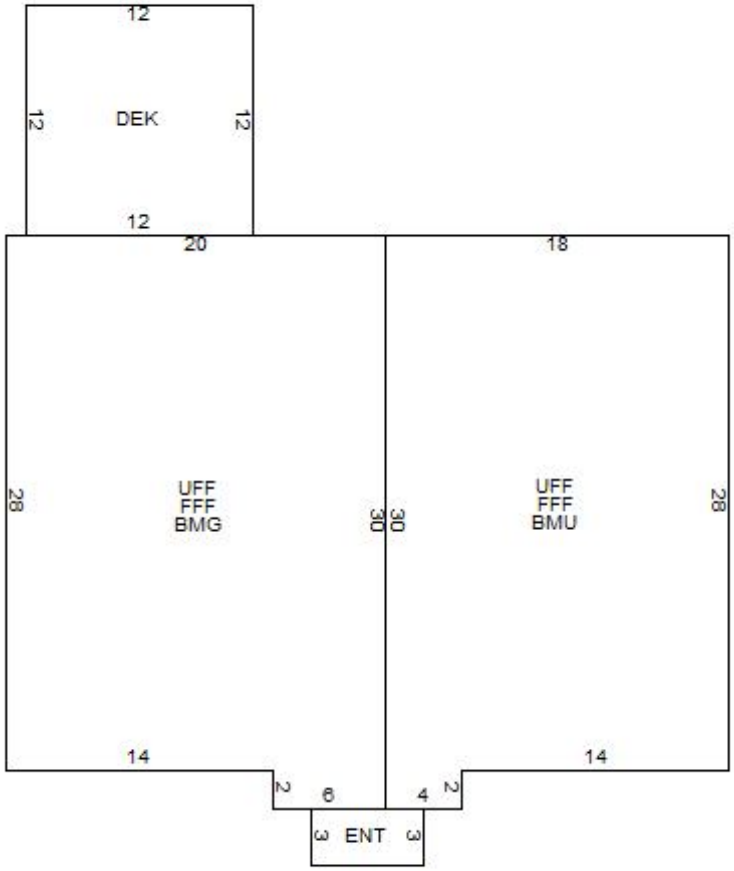

BUILDING SUB AREA DETAILS

ID	Description	Area	Adj.	Effect.
DEK	DECK/ENTRANCE	144	0.10	14
UFF	UPPER FLR FIN	1084	1.00	1084
FFF	FST FLR FIN	1084	1.00	1084
BMG	BASEMENT	572	0.20	114
BMU	BSMNT	512	0.15	77
ENT	ENTRANCE	18	0.10	2
GLA:	**2,168**	**3,414**		**2,375**

2013 BASE YEAR BUILDING VALUATION

Market Cost New:		**$ 164,493**
Year Built:		**2012**
Condition For Age:	AVERAGE	**2 %**
Physical:		
Functional:		
Economic:		
Temporary:		
Total Depreciation:		**2 %**
Building Value:		**$ 161,200**

OWNER INFORMATION

LUNGULESCU OVIDIU A
LUNGULESCU LIVIA
22 WELLESLEY CIRCLE

AUBURN, NH 03032

SALES HISTORY

Date	Book	Page	Type	Price	Grantor
08/06/2012	5342	2849	Q I	464,800	ESPANA BLDG & DEV

PICTURE

LISTING HISTORY

03/18/13 CRVM
04/01/10 LMUL

NOTES

GRAY

EXTRA FEATURES VALUATION

Feature Type	Units	Lngth x Width	Size Adj	Rate	Cond	Market Value	Notes
WETHERSFIELD	1		100	5,000.00	100	5,000	
FIREPLACE 1-STAND	1		100	3,000.00	100	3,000	GAS
						8,000	

MUNICIPAL SOFTWARE BY AVITAR

AUBURN ASSESSING OFFICE

PARCEL TOTAL TAXABLE VALUE

Year	Building	Features	Land
2011	$ 0	$ 0	$ 180
		Parcel Total:	$ 180
2013	**$ 234,100**	**$ 8,000**	**$ 185,000**
		Parcel Total:	**$ 427,100**

LAND VALUATION

Zone: RURAL **Minimum Acreage:** 3.00 **Minimum Frontage:** 300 **Site:** AVERAGE **Driveway:** PAVED **Road:** PAVED

Land Type	Units	Base Rate	NC	Adj	Site	Road	DWay	Topography	Cond	Ad Valorem	SPI	R	Tax Value	Notes
1F RES	1.580 ac	142,320	H	130	100	100	100	100 -- LEVEL	100	185,000	0	N	185,000	
	1.580 ac									185,000			**185,000**	

PICTURE

OWNER

LUNGULESCU OVIDIU A
LUNGULESCU LIVIA
22 WELLESLEY CIRCLE

AUBURN, NH 03032

TAXABLE DISTRICTS

District	Percentage

PERMITS

Date	Permit ID	Permit Type	Notes
04/09/12	12-122	NEW HOME	UNFINISHED BASEMENT,
04/09/12	12-121	NEW HOME	

BUILDING DETAILS

Model: **2.00 STORY FRAME COLONIAL**
Roof: **GABLE OR HIP/ASPHALT**
Ext: **VINYL SIDING**
Int: **DRYWALL**
Floor: **HARDWOOD/CARPET**
Heat: **GAS/FA DUCTED**
Bedrooms: **4** Baths: **2.5** Fixtures:
Extra Kitchens: Fireplaces: **1**
A/C: **Yes 100.00 %** Generators:
Quality: **A3 AVG+30**
Com. Wall:
Size Adj: **0.9161** Base Rate: **RSA 60.00**
Bldg. Rate: **1.2021**
Sq. Foot Cost: **$ 72.13**

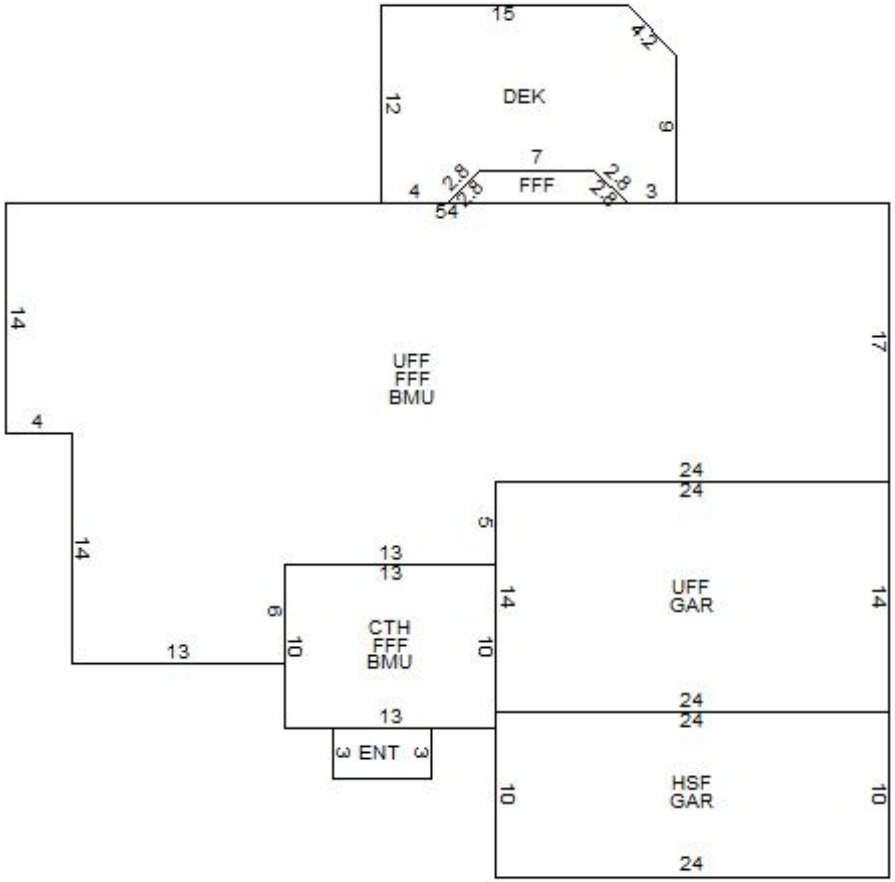

BUILDING SUB AREA DETAILS

ID	Description	Area	Adj.	Effect.
CTH	CATHEDRAL	130	0.10	13
UFF	UPPER FLR FIN	1450	1.00	1450
FFF	FST FLR FIN	1262	1.00	1262
ENT	ENTRANCE	18	0.10	2
GAR	GARAGE	576	0.45	259
DEK	DECK/ENTRANCE	194	0.10	19
HSF	1/2 STRY FIN	240	0.50	120
BMU	BSMNT	1244	0.15	187
GLA:	**2,832**	**5,114**		**3,312**

2013 BASE YEAR BUILDING VALUATION

Market Cost New:		**$ 238,895**
Year Built:		**2012**
Condition For Age:	AVERAGE	**2 %**
Physical:		
Functional:		
Economic:		
Temporary:		
Total Depreciation:		**2 %**
Building Value:		**$ 234,100**

OWNER INFORMATION

GALLINARO STEPHEN R

20 WELLESLEY CIRCLE

AUBURN, NH 03032

SALES HISTORY

Date	Book	Page	Type	Price	Grantor
02/29/2012	5292	1996	Q I	440,200	ESPANA BUILDING &

PICTURE

LISTING HISTORY

03/18/13 CRVL
03/21/12 DMPM
04/01/10 LMUL

NOTES

TAN;3/12 NOH P/U NEW HSE, 3/13 1 BDRM IN BMU DNPU=3 BEDROOM HOME;

EXTRA FEATURES VALUATION

Feature Type	Units	Lngth x Width	Size Adj	Rate	Cond	Market Value	Notes
WETHERSFIELD	1		100	5,000.00	100	5,000	
FIREPLACE 1-STAND	1		100	3,000.00	100	3,000	GAS
POOL-ABOVE GROUND	616	28 x 22	86	3.00	100	1,589	ROUND 28'
						9,600	

MUNICIPAL SOFTWARE BY AVITAR

AUBURN ASSESSING OFFICE

PARCEL TOTAL TAXABLE VALUE

Year	Building	Features	Land
2011	$ 0	$ 0	$ 168
		Parcel Total:	$ 168
2013	**$ 243,100**	**$ 9,600**	**$ 184,400**
		Parcel Total:	**$ 437,100**

LAND VALUATION

Zone: RURAL **Minimum Acreage:** 3.00 **Minimum Frontage:** 300 **Site:** AVERAGE **Driveway:** PAVED **Road:** PAVED

Land Type	Units	Base Rate	NC	Adj	Site	Road	DWay	Topography	Cond	Ad Valorem	SPI	R	Tax Value	Notes
1F RES	1.470 ac	141,880	H	130	100	100	100	100 -- LEVEL	100	184,400	0	N	184,400	
	1.470 ac									184,400			**184,400**	

PICTURE

OWNER

GALLINARO STEPHEN R

20 WELLESLEY CIRCLE

AUBURN, NH 03032

TAXABLE DISTRICTS

District	Percentage

PERMITS

Date	Permit ID	Permit Type	Notes
07/03/12	12-270	POOL	MUST MAINTAIN WETLAN
09/15/11	11-277	NEW HOME	UNFINISHED BASEMENT,

BUILDING DETAILS

Model: **2.00 STORY FRAME COLONIAL**
Roof: **GABLE OR HIP/ASPHALT**
Ext: **VINYL SIDING**
Int: **DRYWALL**
Floor: **HARDWOOD/CARPET**
Heat: **GAS/FA DUCTED**
Bedrooms: **3** Baths: **2.5** Fixtures: **10**
Extra Kitchens: Fireplaces: **1**
A/C: **Yes 100.00 %** Generators:
Quality: **A3 AVG+30**
Com. Wall:
Size Adj: **0.9067** Base Rate: **RSA 60.00**
Bldg. Rate: **1.1898**
Sq. Foot Cost: **$ 71.39**

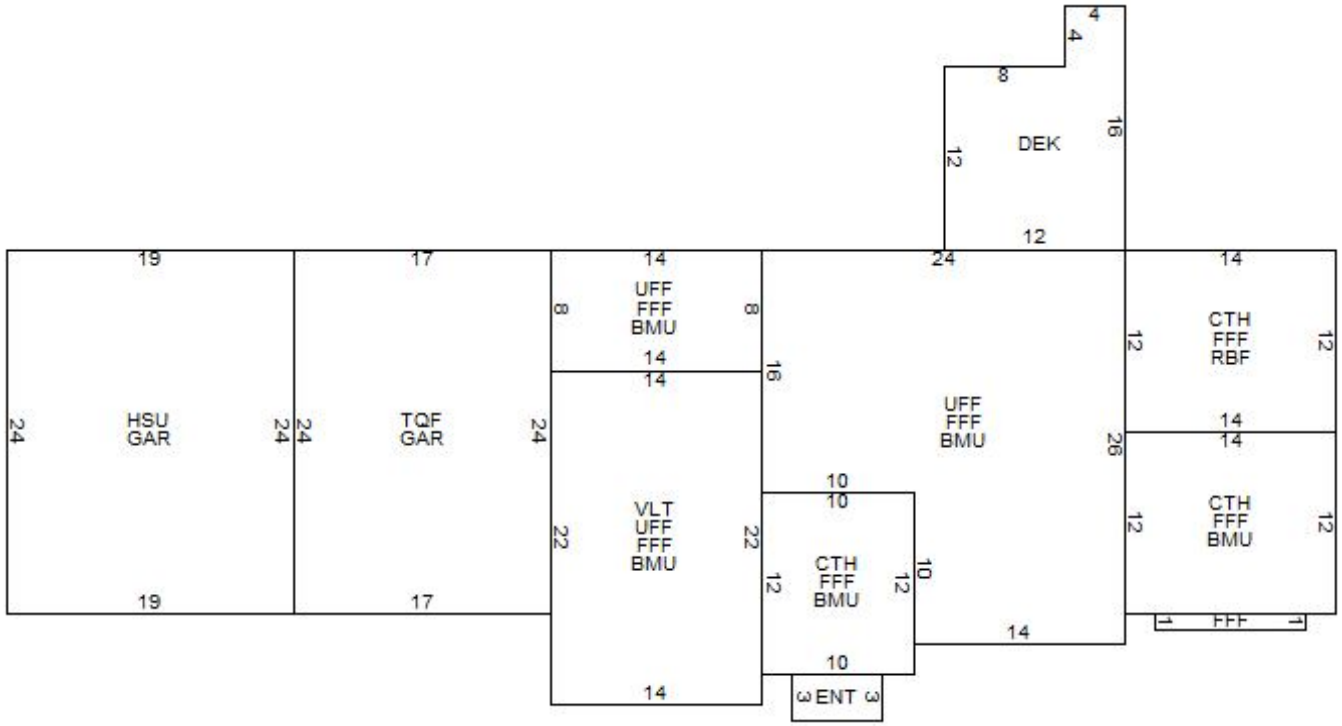

BUILDING SUB AREA DETAILS

ID	Description	Area	Adj.	Effect.
HSU	1/2 STRY UNFIN	456	0.25	114
FFF	FST FLR FIN	1410	1.00	1410
VLT	VAULTED	308	0.05	15
ENT	ENTRANCE	18	0.10	2
DEK	DECK/ENTRANCE	160	0.10	16
CTH	CATHEDRAL	456	0.10	46
RBF	RAISED BSMNT	168	0.50	84
BMU	BSMNT	1232	0.15	185
UFF	UPPER FLR FIN	944	1.00	944
GAR	GARAGE	864	0.45	389
TQF	3/4 STRY FIN	408	0.75	306
GLA:	**2,660**	**6,424**		**3,511**

2013 BASE YEAR BUILDING VALUATION

Market Cost New:		**$ 250,650**
Year Built:		**2011**
Condition For Age:	AVERAGE	**3 %**
Physical:		
Functional:		
Economic:		
Temporary:		
Total Depreciation:		**3 %**
Building Value:		**$ 243,100**

OWNER INFORMATION

POULIOT BRIAN J

16 WELLESLEY CIRCLE

AUBURN, NH 03032

SALES HISTORY

Date	Book	Page	Type	Price	Grantor
11/19/2012	5379	529	Q I	551,400	ESPANA BUILDING &

PICTURE

LISTING HISTORY

03/28/13 DMPM
03/22/12 DMPL
04/01/10 LMUL

NOTES

GRN;3/13 P/U NEW HSE, EST HSE IS 100% COMPLETED & INT, (2) GRANITE LIGHT POSTS-WALK OUT BSMT;

EXTRA FEATURES VALUATION

Feature Type	Units	Lngth x Width	Size Adj	Rate	Cond	Market Value	Notes
WETHERSFIELD	1		100	5,000.00	100	5,000	
FIREPLACE 1-STAND	1		100	3,000.00	100	3,000	GAS
						8,000	

MUNICIPAL SOFTWARE BY AVITAR

AUBURN ASSESSING OFFICE

PARCEL TOTAL TAXABLE VALUE

Year	Building	Features	Land
2011	$ 0	$ 0	$ 242
		Parcel Total:	$ 242
2013	**$ 342,700**	**$ 8,000**	**$ 193,500**
		Parcel Total:	**$ 544,200**

LAND VALUATION

Zone: RURAL **Minimum Acreage:** 3.00 **Minimum Frontage:** 300 **Site:** GOOD **Driveway:** PAVED **Road:** PAVED

Land Type	Units	Base Rate	NC	Adj	Site	Road	DWay	Topography	Cond	Ad Valorem	SPI	R	Tax Value	Notes
1F RES	2.120 ac	144,480	H	130	103	100	100	100 -- LEVEL	100	193,500	0	N	193,500	
	2.120 ac									193,500			**193,500**	

PICTURE

OWNER

POULIOT BRIAN J

16 WELLESLEY CIRCLE

AUBURN, NH 03032

TAXABLE DISTRICTS

District	Percentage

PERMITS

Date	Permit ID	Permit Type	Notes
05/31/12	12-012A	NEW HOME	UNFINISHED 3RD FLOOR,
01/17/12	12-012	NEW HOME	UNFINISHED BASEMENT,

BUILDING DETAILS

Model: **2.50 STORY FRAME COLONIAL**
Roof: **GABLE OR HIP/ASPHALT**
Ext: **VINYL SIDING**
Int: **DRYWALL**
Floor: **HARDWOOD/HARD TILE**
Heat: **GAS/FA DUCTED**
Bedrooms: **4** Baths: **3.5** Fixtures:
Extra Kitchens: Fireplaces:
A/C: **Yes 100.00 %** Generators:
Quality: **A2 AVG+20**
Com. Wall:
Size Adj: **0.8512** Base Rate: **RSA 60.00**
Bldg. Rate: **1.0511**
Sq. Foot Cost: **$ 63.06**

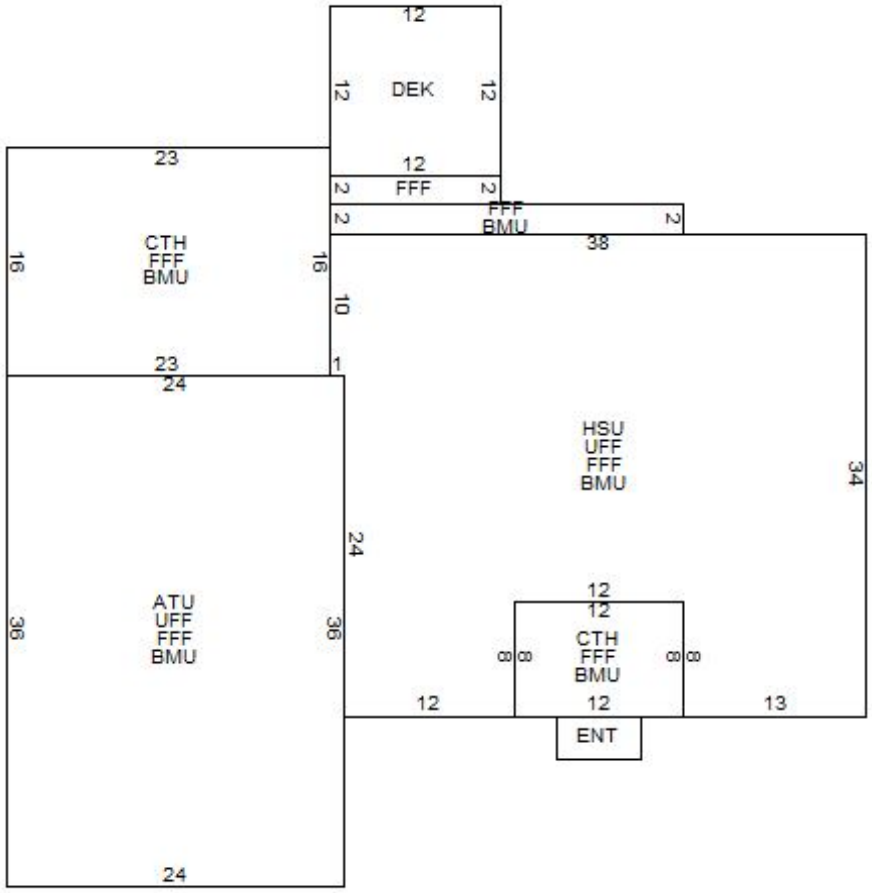

BUILDING SUB AREA DETAILS

ID	Description	Area	Adj.	Effect.
ATU	ATTIC	864	0.10	86
UFF	UPPER FLR FIN	2036	1.00	2036
FFF	FST FLR FIN	2574	1.00	2574
BMU	BSMNT	2550	0.15	383
CTH	CATHEDRAL	464	0.10	46
HSU	1/2 STRY UNFIN	1172	0.25	293
ENT	ENTRANCE	18	0.10	2
DEK	DECK/ENTRANCE	144	0.10	14
GLA:	**4,610**	**9,822**		**5,434**

2013 BASE YEAR BUILDING VALUATION

Market Cost New: **$ 342,668**
Year Built: **2013**
Condition For Age: AVERAGE
Physical:
Functional:
Economic:
Temporary:
Total Depreciation:

Building Value: **$ 342,700**

OWNER INFORMATION

MORIN JASON A
MORIN COURTNEY M
135 STEAM MILL ROAD

AUBURN, NH 03032

SALES HISTORY

Date	Book	Page	Type	Price	Grantor
04/01/2013	5424	1009	Q I	430,800	ESPANA BUILDING &

PICTURE

LISTING HISTORY

03/27/13 DMPM
04/01/10 LMUL

NOTES

TAN; 3/13 PU NEW HSE/NOH, EST INT & HSE IS 100% COMPLETED, FLAG 2014 FOR A/C;VLT AREA EST

EXTRA FEATURES VALUATION

Feature Type	Units	Lngth x Width	Size Adj	Rate	Cond	Market Value	Notes
WETHERSFIELD	1		100	5,000.00	100	5,000	
FIREPLACE 1-STAND	1		100	3,000.00	100	3,000	
						8,000	

MUNICIPAL SOFTWARE BY AVITAR

AUBURN ASSESSING OFFICE

PARCEL TOTAL TAXABLE VALUE

Year	Building	Features	Land
2011	$ 0	$ 0	$ 242
		Parcel Total:	$ 242
2013	**$ 230,100**	**$ 8,000**	**$ 187,800**
		Parcel Total:	**$ 425,900**

LAND VALUATION

Zone: RURAL **Minimum Acreage:** 3.00 **Minimum Frontage:** 300 **Site:** AVERAGE **Driveway:** PAVED **Road:** PAVED

Land Type	Units	Base Rate	NC	Adj	Site	Road	DWay	Topography	Cond	Ad Valorem	SPI	R	Tax Value	Notes
1F RES	2.120 ac	144,480	H	130	100	100	100	100 -- LEVEL	100	187,800	0	N	187,800	
	2.120 ac									187,800			**187,800**	

PICTURE

OWNER

MORIN JASON A
MORIN COURTNEY M
135 STEAM MILL ROAD

AUBURN, NH 03032

TAXABLE DISTRICTS

District	Percentage

PERMITS

Date	Permit ID	Permit Type	Notes
10/09/12	12-460	NEW HOME	SUBCONTRACTORS TO SE

BUILDING DETAILS

Model: **2.00 STORY FRAME COLONIAL**
Roof: **GABLE OR HIP/ASPHALT**
Ext: **VINYL SIDING**
Int: **DRYWALL**
Floor: **HARDWOOD/HARD TILE**
Heat: **GAS/FA DUCTED**
Bedrooms: **3** Baths: **2.5** Fixtures: **10**
Extra Kitchens: Fireplaces:
A/C: **No** Generators:
Quality: **A3 AVG+30**
Com. Wall:
Size Adj: **0.9136** Base Rate: **RSA 60.00**
Bldg. Rate: **1.1639**
Sq. Foot Cost: **$ 69.84**

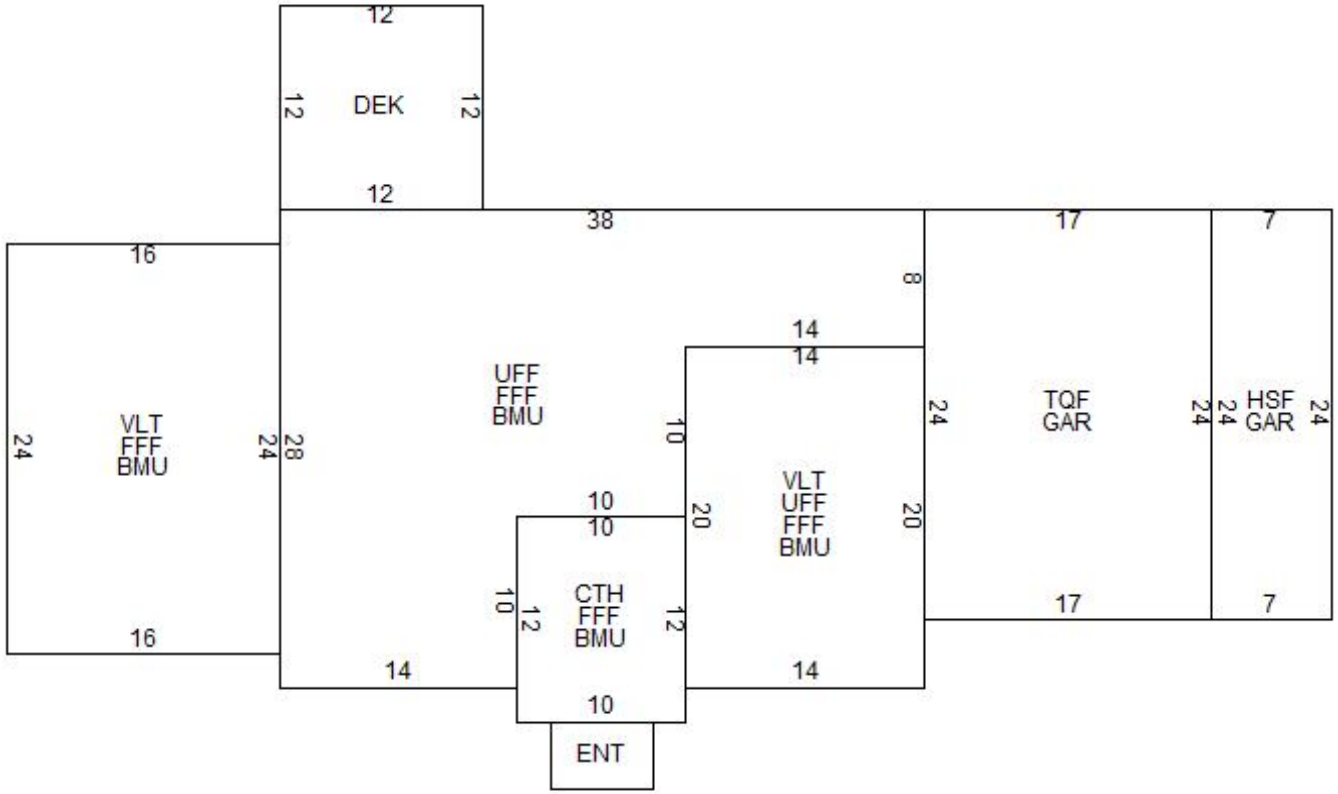

BUILDING SUB AREA DETAILS

ID	Description	Area	Adj.	Effect.
FFF	FST FLR FIN	1468	1.00	1468
BMU	BSMNT	1468	0.15	220
UFF	UPPER FLR FIN	964	1.00	964
CTH	CATHEDRAL	120	0.10	12
DEK	DECK/ENTRANCE	144	0.10	14
TQF	3/4 STRY FIN	408	0.75	306
VLT	VAULTED	664	0.05	33
GAR	GARAGE	576	0.45	259
HSF	1/2 STRY FIN	168	0.50	84
ENT	ENTRANCE	24	0.10	2
GLA:	**2,822**	**6,004**		**3,362**

2013 BASE YEAR BUILDING VALUATION

Market Cost New:		**$ 234,802**
Year Built:		**2012**
Condition For Age:	AVERAGE	**2 %**
Physical:		
Functional:		
Economic:		
Temporary:		
Total Depreciation:		**2 %**
Building Value:		**$ 230,100**

OWNER INFORMATION

GAGNE BRENT W
GAGNE MELISSA J
93 STEAM MILL ROAD

AUBURN, NH 03032

SALES HISTORY

Date	Book	Page	Type	Price	Grantor
11/01/2012	5373	1151	Q I	381,733	ESPANA BUILDING &

PICTURE

LISTING HISTORY

03/27/13 DMPM
04/01/10 LMUL

NOTES

3/13; NOH P/U NEW HSE, EST HSE IS 100% COMPLETED, EST INT;VLT AREAS EST

EXTRA FEATURES VALUATION

Feature Type	Units	Lngth x Width	Size Adj	Rate	Cond	Market Value	Notes
WETHERSFIELD	1		100	5,000.00	100	5,000	
FIREPLACE 1-STAND	1		100	3,000.00	100	3,000	
						8,000	

MUNICIPAL SOFTWARE BY AVITAR

AUBURN ASSESSING OFFICE

PARCEL TOTAL TAXABLE VALUE

Year	Building	Features	Land
2011	$ 0	$ 0	$ 247
		Parcel Total:	$ 247
2013	**$ 190,400**	**$ 8,000**	**$ 188,100**
		Parcel Total:	**$ 386,500**

LAND VALUATION

Zone: RURAL **Minimum Acreage:** 3.00 **Minimum Frontage:** 300 **Site:** AVERAGE **Driveway:** PAVED **Road:** PAVED

Land Type	Units	Base Rate	NC	Adj	Site	Road	DWay	Topography	Cond	Ad Valorem	SPI	R	Tax Value	Notes
1F RES	2.170 ac	144,680	H	130	100	100	100	100 -- LEVEL	100	188,100	0	N	188,100	
	2.170 ac									188,100			**188,100**	

PICTURE

OWNER

GAGNE BRENT W
GAGNE MELISSA J
93 STEAM MILL ROAD

AUBURN, NH 03032

TAXABLE DISTRICTS

District	Percentage

PERMITS

Date	Permit ID	Permit Type	Notes
07/19/12	12-313	NEW HOME	UNFINISHED BASEMENT,

BUILDING DETAILS

Model: **2.00 STORY FRAME COLONIAL**
Roof: **GABLE OR HIP/ASPHALT**
Ext: **VINYL SIDING**
Int: **DRYWALL**
Floor: **HARDWOOD/CARPET**
Heat: **GAS/FA DUCTED**
Bedrooms: **3** Baths: **2.5** Fixtures:
Extra Kitchens: Fireplaces:
A/C: **Yes 100.00 %** Generators:
Quality: **A2 AVG+20**
Com. Wall:
Size Adj: **0.9419** Base Rate: **RSA 60.00**
Bldg. Rate: **1.1298**
Sq. Foot Cost: **$ 67.79**

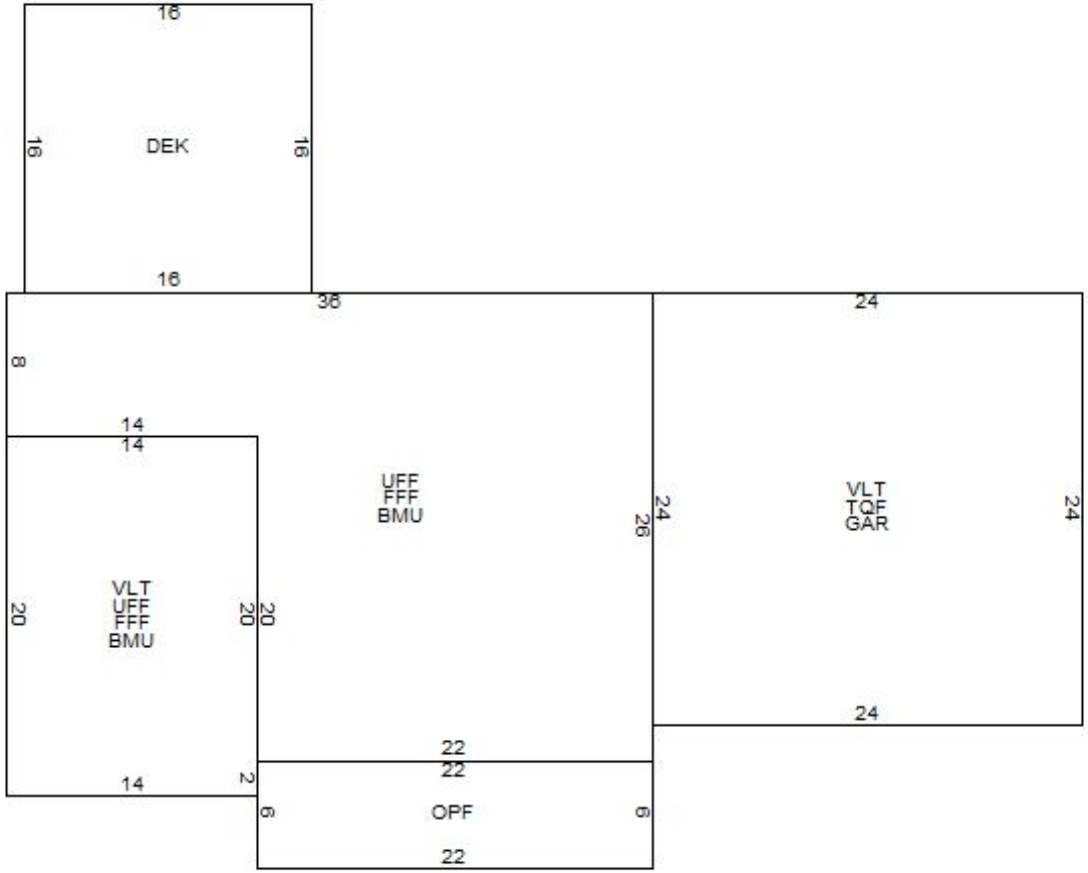

BUILDING SUB AREA DETAILS

ID	Description	Area	Adj.	Effect.
UFF	UPPER FLR FIN	964	1.00	964
FFF	FST FLR FIN	964	1.00	964
BMU	BSMNT	964	0.15	145
DEK	DECK/ENTRANCE	256	0.10	26
OPF	OPEN PORCH	132	0.25	33
VLT	VAULTED	856	0.05	43
TQF	3/4 STRY FIN	576	0.75	432
GAR	GARAGE	576	0.45	259
GLA:	**2,360**	**5,288**		**2,866**

2013 BASE YEAR BUILDING VALUATION

Market Cost New:		**$ 194,286**
Year Built:		**2012**
Condition For Age:	AVERAGE	**2 %**
Physical:		
Functional:		
Economic:		
Temporary:		
Total Depreciation:		**2 %**
Building Value:		**$ 190,400**

OWNER INFORMATION

HAMEL JOSHUA A
POULETTE AMY L
77 SANDY KNOLL DRIVE

AUBURN, NH 03032

SALES HISTORY

Date	Book	Page	Type	Price	Grantor
02/01/2013	5404	2866	Q I	239,933	MULLEN AMANDA R
01/15/2008	4878	1327	U I 46	200,000	NOMRA ASSET
11/01/2007	4858	1724	U I 51	207,752	GRIFF, STEPHEN
01/13/2005	4425	252	Q I	250,000	SHAY BRETA
01/10/2003	3928	0741	U I 38		SHAY, RICHARD D

PICTURE

LISTING HISTORY

03/18/13	CRVM	
10/08/09	DMCL	
06/18/09	DMVM	
03/04/09	INSP	MARKED FOR INSPECTION
10/18/06	MAIL	
06/22/06	BHVR	
11/27/02	JDRL	

NOTES

WHITE & BRICK, FRONT OF HOME BRICK ONLY; ORIGINAL WNDWS, KIT & BTH; DNVI - VERIFIED INFO @ DOOR;6/09 NOH - P/U NEW SHED & REM'D ENT;10/09 NEW ROOF IN 2008 ;

EXTRA FEATURES VALUATION

Feature Type	Units	Lngth x Width	Size Adj	Rate	Cond	Market Value	Notes
SHED-WOOD	140	10 x 14	174	3.50	100	853	
POOL-ABOVE GROUND	432	24 x 18	97	3.00	100	1,257	
						2,100	

MUNICIPAL SOFTWARE BY AVITAR

AUBURN ASSESSING OFFICE

PARCEL TOTAL TAXABLE VALUE

Year	Building	Features	Land
2011	$ 99,600	$ 900	$ 134,700
		Parcel Total:	$ 235,200
2013	**$ 88,600**	**$ 2,100**	**$ 146,700**
		Parcel Total:	**$ 237,400**

LAND VALUATION

Zone: RESIDENTIAL 1 & 2 **Minimum Acreage:** 2.00 **Minimum Frontage:** 200 **Site:** AVERAGE **Driveway:** DIRT **Road:** PAVED

Land Type	Units	Base Rate	NC	Adj	Site	Road	DWay	Topography	Cond	Ad Valorem	SPI	R	Tax Value	Notes
1F RES	2.000 ac	144,000	F	105	100	100	97	100 -- LEVEL	100	146,700	0	N	146,700	
	2.000 ac									146,700			**146,700**	

PICTURE

OWNER

HAMEL JOSHUA A
POULETTE AMY L
77 SANDY KNOLL DRIVE

AUBURN, NH 03032

TAXABLE DISTRICTS

District	Percentage

PERMITS

Date	Permit ID	Permit Type	Notes

BUILDING DETAILS

Model: **2.00 STORY FRAME GAMBREL**
Roof: **GAMBREL/ASPHALT**
Ext: **BRK VENEER/VINYL SIDING**
Int: **DRYWALL**
Floor: **PERGO/LAMINATE**
Heat: **OIL/FA DUCTED**
Bedrooms: **3** Baths: **1.5** Fixtures: **5**
Extra Kitchens: Fireplaces:
A/C: **No** Generators:
Quality: **A0 AVG**
Com. Wall:
Size Adj: **1.0454** Base Rate: **RSA 60.00**
Bldg. Rate: **1.0040**
Sq. Foot Cost: **$ 60.24**

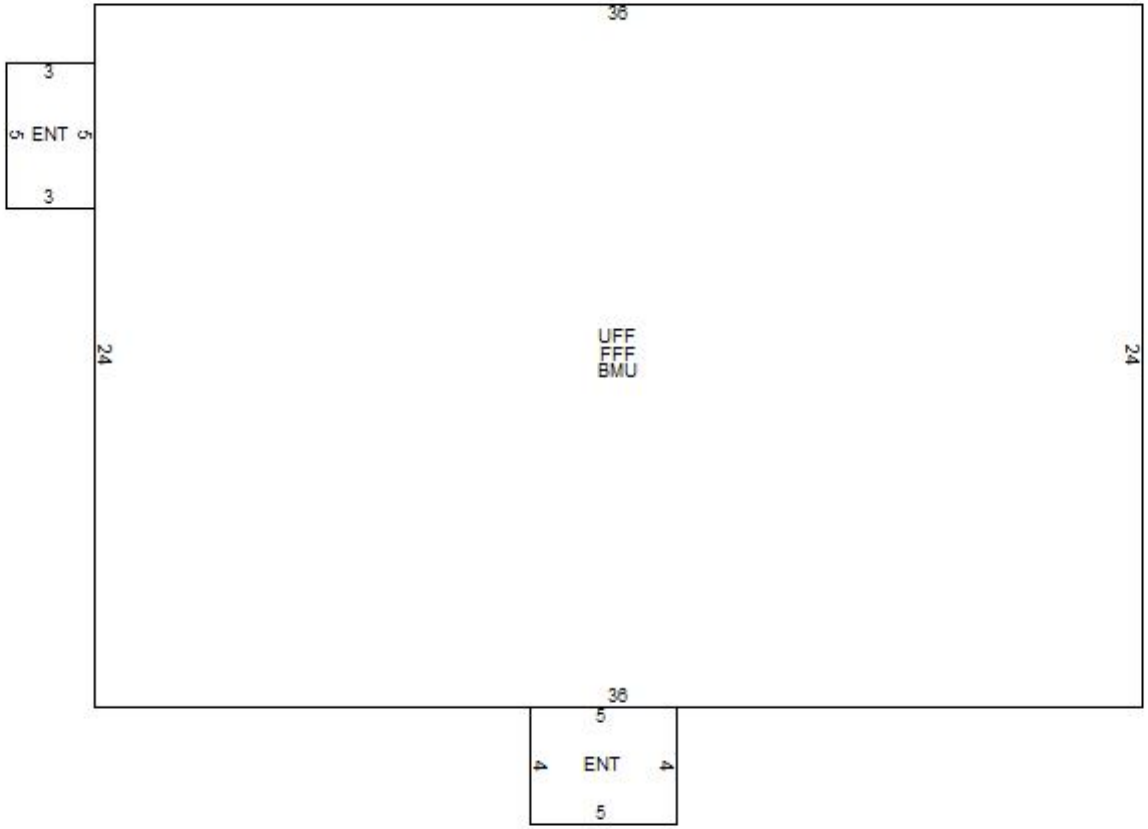

BUILDING SUB AREA DETAILS

ID	Description	Area	Adj.	Effect.
FFF	FST FLR FIN	864	1.00	864
UFF	UPPER FLR FIN	864	1.00	864
BMU	BSMNT	864	0.15	130
ENT	ENTRANCE	35	0.10	4
GLA:	**1,728**	**2,627**		**1,862**

2013 BASE YEAR BUILDING VALUATION

Market Cost New:		**$ 112,167**
Year Built:		**1985**
Condition For Age:	AVERAGE	**20 %**
Physical:		
Functional:	WH	**1 %**
Economic:		
Temporary:		
Total Depreciation:		**21 %**
Building Value:		**$ 88,600**

OWNER INFORMATION

EDWARDS JR JESSE C
EDWARDS NAOMI C
33 RATTLESNAKE HILL RD

AUBURN, NH 03032

SALES HISTORY

Date	Book	Page	Type	Price	Grantor
03/21/2013	5420	1855	Q I	230,000	BIENVENUE,

PICTURE

LISTING HISTORY

10/09/09	DMCL	
06/18/09	DMVM	
03/04/09	INSP	MARKED FOR INSPECTION
04/09/04	JDPM	
12/11/02	JDRL	

NOTES

WHITE; 1 BDRM IN BMF; WNDWS REPLACED & KITCHEN REMODELED 10 YRS AGO; ORIG BTH; 6/09 NOH - CHG'D EPF TO FFF/CRL DUE TO HEAT, CHG'D SIDING, P/U OPF, DNPU (2) CANVAS SHEDS OR OPF IN FRONT OF BMG;10/09 NEW ROOF IN 08 ;BACK-UP GEN;

EXTRA FEATURES VALUATION

Feature Type	Units	Lngth x Width	Size Adj	Rate	Cond	Market Value	Notes
SHED-WOOD	336	24 x 14	108	3.50	100	1,270	
						1,300	

MUNICIPAL SOFTWARE BY AVITAR

AUBURN ASSESSING OFFICE

PARCEL TOTAL TAXABLE VALUE

Year	Building	Features	Land
2011	$ 99,700	$ 1,300	$ 148,800
		Parcel Total:	$ 249,800
2013	**$ 91,900**	**$ 1,300**	**$ 143,600**
		Parcel Total:	**$ 236,800**

LAND VALUATION

Zone: RESIDENTIAL 1 & 2 **Minimum Acreage:** 2.00 **Minimum Frontage:** 200 **Site:** AVERAGE **Driveway:** PAVED **Road:** PAVED

Land Type	Units	Base Rate	NC	Adj	Site	Road	DWay	Topography	Cond	Ad Valorem	SPI	R	Tax Value	Notes
1F RES	2.000 ac	144,000	F	105	100	100	100	95 -- MILD	100	143,600	0	N	143,600	
1F RES	0.008 ac	x 3,500	X	100				95 -- MILD	100	0	0	N	0	
	2.008 ac									143,600			**143,600**	

Map: 000005 **Lot: 000010** **Sub: 000006** **Card: 1 of 1** **0033 RATTLESNAKE HILL RD** **AUBURN** **Printed: 07/11/2013**

PICTURE

OWNER

EDWARDS JR JESSE C
EDWARDS NAOMI C
33 RATTLESNAKE HILL RD

AUBURN, NH 03032

TAXABLE DISTRICTS

District	Percentage

PERMITS

Date	Permit ID	Permit Type	Notes
05/01/03	03-091	DECK	REPLACE EXIST. DECK W/

BUILDING DETAILS

Model: **1.00 STORY FRAME RANCH**
Roof: **GABLE OR HIP/ASPHALT**
Ext: **VINYL SIDING**
Int: **DRYWALL**
Floor: **HARDWOOD/LINOLEUM/VINYL**
Heat: **OIL/FA DUCTED**
Bedrooms: **3** Baths: **1.0** Fixtures: **3**
Extra Kitchens: Fireplaces:
A/C: **No** Generators: **1**
Quality: **A0 AVG**
Com. Wall:
Size Adj: **1.0457** Base Rate: **RSA 60.00**
Bldg. Rate: **1.0039**
Sq. Foot Cost: **$ 60.23**

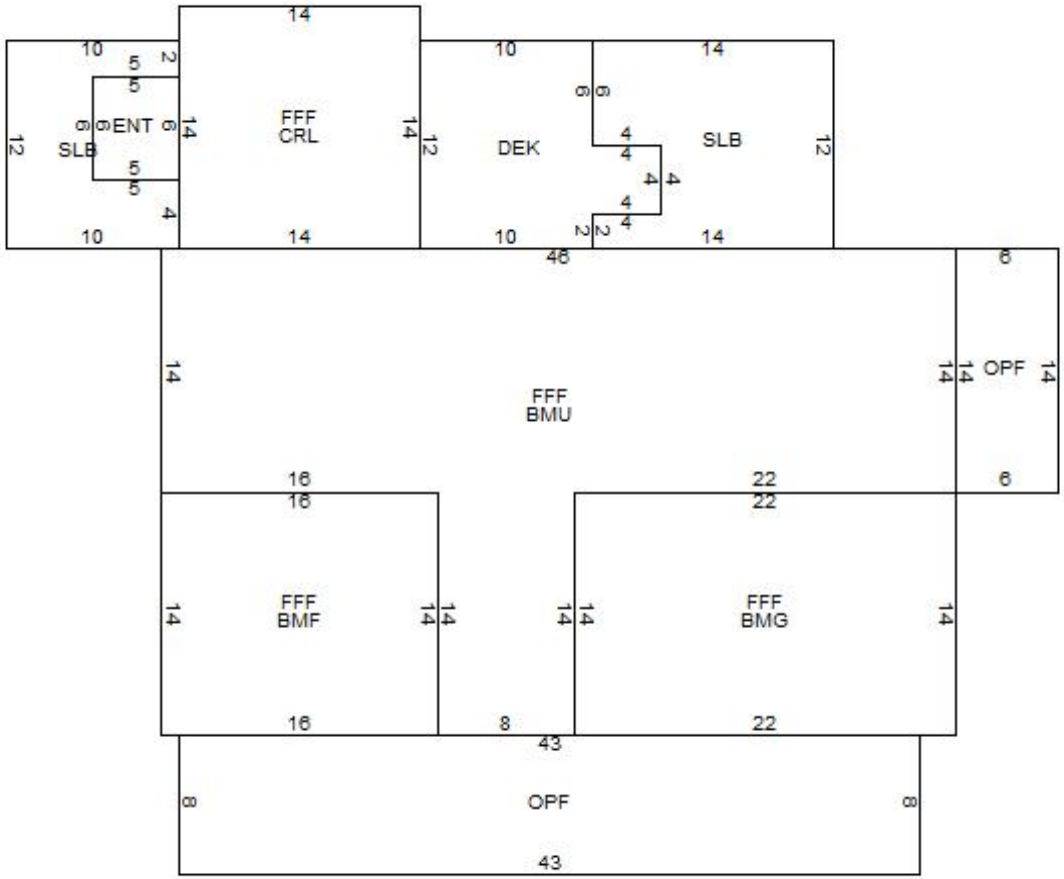

BUILDING SUB AREA DETAILS

ID	Description	Area	Adj.	Effect.
OPF	OPEN PORCH	428	0.25	107
BMU	BSMNT	756	0.15	113
SLB	SLB	242	0.00	0
ENT	ENTRANCE	30	0.10	3
FFF	FST FLR FIN	1484	1.00	1484
CRL	CRAWL SPACE	196	0.05	10
DEK	DECK/ENTRANCE	136	0.10	14
BMG	BASEMENT	308	0.20	62
BMF	BSMNT FINISHED	224	0.30	67
GLA:	**1,484**	**3,804**		**1,860**

2013 BASE YEAR BUILDING VALUATION

Market Cost New:		**$ 112,028**
Year Built:		**1976**
Condition For Age:	GOOD	**18 %**
Physical:		
Functional:		
Economic:		
Temporary:		
Total Depreciation:		**18 %**
Building Value:		**$ 91,900**

OWNER INFORMATION

KRUPINSKI KEVIN J
KRUPINSKI MARYBETH
14 WILLOW COURT

AUBURN, NH 03032

SALES HISTORY

Date	Book	Page	Type	Price	Grantor
03/28/2013	5422	2849	Q I	357,000	JMJ PROPERTIES LLC
10/07/2011	5251	323	U V 12	772,000	GAGNON JEAN

PICTURE

LISTING HISTORY

03/28/13 DMPE
04/01/12 LMSL
03/22/12 DMPM

NOTES

SUBDIVPL D-36800 EFF; GREY;3/13 NOH EST HSE IS 100% COMPLETED, REMOVE UC & FLAG;

EXTRA FEATURES VALUATION

Feature Type	Units	Lngth x Width	Size Adj	Rate	Cond	Market Value	Notes
FIREPLACE 1-STAND	1		100	3,000.00	100	3,000	
WILLOWCOURT COMMON	1		100	5,000.00	100	5,000	
						8,000	

MUNICIPAL SOFTWARE BY AVITAR

AUBURN ASSESSING OFFICE

PARCEL TOTAL TAXABLE VALUE

Year	Building	Features	Land
2011	$ 0	$ 0	$ 0
		Parcel Total:	$ 0
2013	**$ 166,100**	**$ 8,000**	**$ 159,600**
		Parcel Total:	**$ 333,700**

LAND VALUATION

Zone: RURAL **Minimum Acreage:** 3.00 **Minimum Frontage:** 300 **Site:** AVERAGE **Driveway:** PAVED **Road:** PAVED

Land Type	Units	Base Rate	NC	Adj	Site	Road	DWay	Topography	Cond	Ad Valorem	SPI	R	Tax Value	Notes
1F RES	0.730 ac	129,200	H	130	100	100	100	95 -- MILD	100	159,600	0	N	159,600	
	0.730 ac									159,600			**159,600**	

PICTURE

OWNER

KRUPINSKI KEVIN J
KRUPINSKI MARYBETH
14 WILLOW COURT

AUBURN, NH 03032

TAXABLE DISTRICTS

District	Percentage

PERMITS

Date	Permit ID	Permit Type	Notes
09/07/11	11-263	NEW HOME	UNFINISHED BASEMENT,

BUILDING DETAILS

Model: **1.75 STORY FRAME CAPE**
Roof: **GABLE OR HIP/ASPHALT**
Ext: **VINYL SIDING**
Int: **DRYWALL**
Floor: **HARDWOOD/CARPET**
Heat: **GAS/FA DUCTED**
Bedrooms: **4** Baths: **2.5** Fixtures:
Extra Kitchens: Fireplaces:
A/C: **No** Generators:
Quality: **A2 AVG+20**
Com. Wall:
Size Adj: **0.9698** Base Rate: **RSA 60.00**
Bldg. Rate: **1.1291**
Sq. Foot Cost: **$ 67.74**

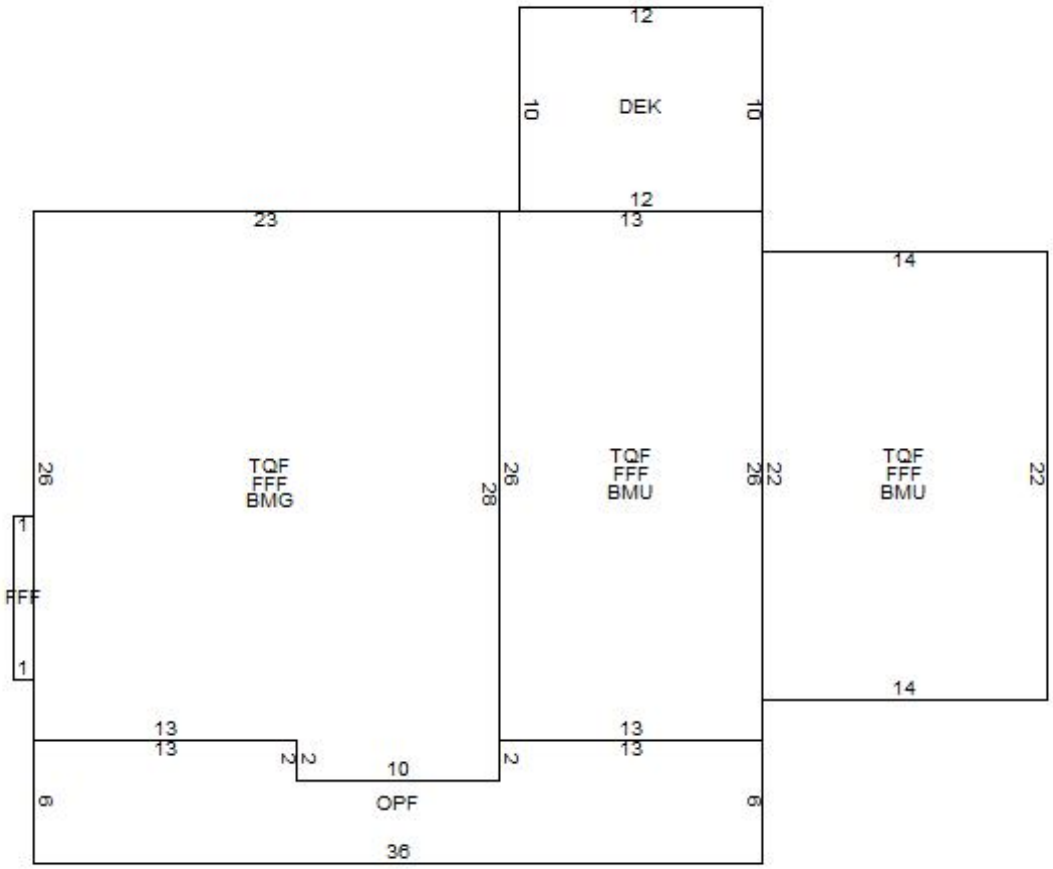

BUILDING SUB AREA DETAILS

ID	Description	Area	Adj.	Effect.
DEK	DECK/ENTRANCE	120	0.10	12
TQF	3/4 STRY FIN	1264	0.75	948
FFF	FST FLR FIN	1272	1.00	1272
BMG	BASEMENT	618	0.20	124
BMU	BSMNT	646	0.15	97
OPF	OPEN PORCH	196	0.25	49
GLA:	**2,220**	**4,116**		**2,502**

2013 BASE YEAR BUILDING VALUATION

Market Cost New:		**$ 169,485**
Year Built:		**2012**
Condition For Age:	AVERAGE	**2 %**
Physical:		
Functional:		
Economic:		
Temporary:		
Total Depreciation:		**2 %**
Building Value:		**$ 166,100**

OWNER INFORMATION

JACKSON TYLER M
JACKSON SHAUNNA J
18 WILLOW COURT

AUBURN, NH 03032

SALES HISTORY

Date	Book	Page	Type	Price	Grantor
01/16/2013	5399	1530	Q I	337,000	JACKSON TYLER M
10/07/2011	5251	323	U V 12	722,000	GAGNON JEAN

PICTURE

LISTING HISTORY

03/15/13 CRVM
04/01/12 LMSL
03/22/12 DMPL

NOTES

BEIGE;SUB-DIV EFF 4-12 PLAN D-36800;3/12 CLEARED SITE FLAG 2013;3/13 SPOKE W/OWNER ON WAY OUT; MEAS BMG ONLY;

EXTRA FEATURES VALUATION

Feature Type	Units	Lngth x Width	Size Adj	Rate	Cond	Market Value	Notes
WILLOWCOURT COMMON	1		100	5,000.00	100	5,000	
FIREPLACE 1-STAND	1		100	3,000.00	100	3,000	GAS
						8,000	

MUNICIPAL SOFTWARE BY AVITAR

AUBURN ASSESSING OFFICE

PARCEL TOTAL TAXABLE VALUE

Year	Building	Features	Land
2011	$ 0	$ 0	$ 0
		Parcel Total:	$ 0
2013	**$ 156,300**	**$ 8,000**	**$ 164,500**
		Parcel Total:	**$ 328,800**

LAND VALUATION

Zone: RURAL **Minimum Acreage:** 3.00 **Minimum Frontage:** 300 **Site:** AVERAGE **Driveway:** PAVED **Road:** PAVED

Land Type	Units	Base Rate	NC	Adj	Site	Road	DWay	Topography	Cond	Ad Valorem	SPI	R	Tax Value	Notes
1F RES	0.830 ac	133,200	H	130	100	100	100	95 -- MILD	100	164,500	0	N	164,500	
	0.830 ac									164,500			**164,500**	

PICTURE

OWNER

JACKSON TYLER M
JACKSON SHAUNNA J
18 WILLOW COURT

AUBURN, NH 03032

TAXABLE DISTRICTS

District	Percentage

PERMITS

Date	Permit ID	Permit Type	Notes
03/28/12	12-105	NEW HOME	UNFINISHED BASEMENT,

BUILDING DETAILS

Model: **2.00 STORY FRAME COLONIAL**
Roof: **GABLE OR HIP/ASPHALT**
Ext: **VINYL SIDING**
Int: **DRYWALL**
Floor: **HARDWOOD/CARPET**
Heat: **GAS/FA DUCTED**
Bedrooms: **4** Baths: **2.5** Fixtures: **8**
Extra Kitchens: Fireplaces: **1**
A/C: **Yes 100.00 %** Generators:
Quality: **A2 AVG+20**
Com. Wall:
Size Adj: **1.0009** Base Rate: **RSA 60.00**
Bldg. Rate: **1.2124**
Sq. Foot Cost: **$ 72.74**

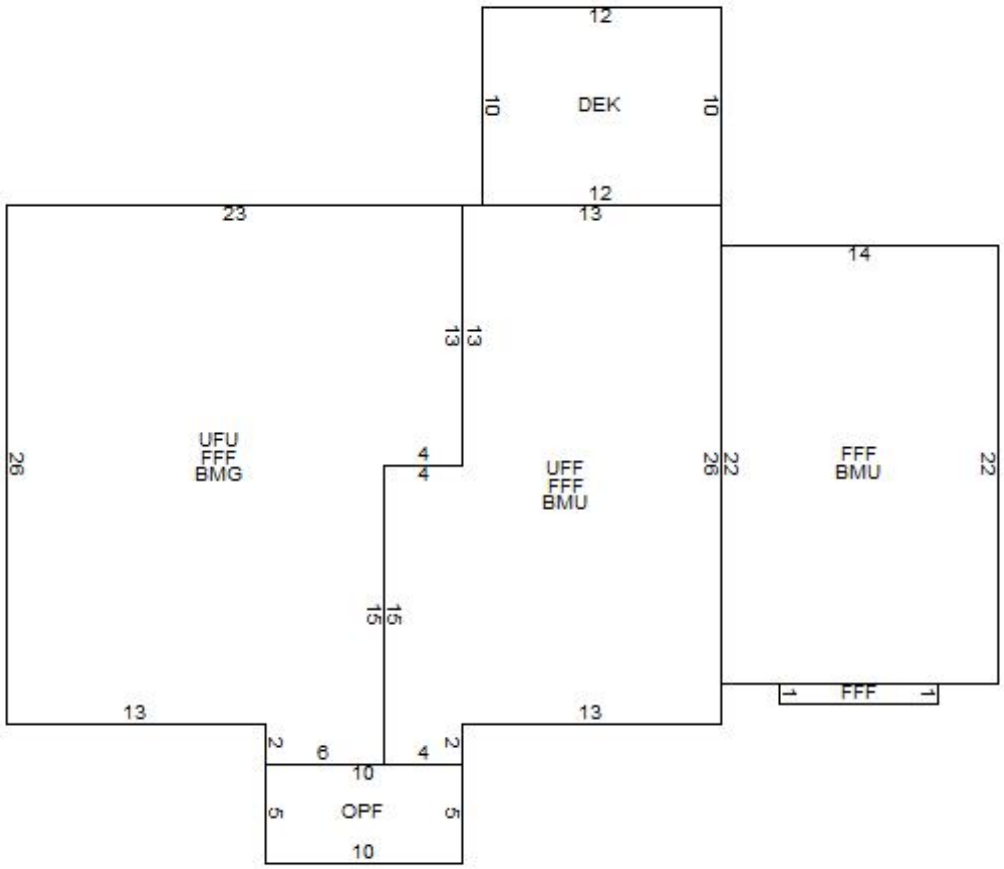

BUILDING SUB AREA DETAILS

ID	Description	Area	Adj.	Effect.
BMG	BASEMENT	558	0.20	112
UFF	UPPER FLR FIN	398	1.00	398
BMU	BSMNT	706	0.15	106
OPF	OPEN PORCH	50	0.25	13
DEK	DECK/ENTRANCE	120	0.10	12
UFU	UPPER FLR	558	0.50	279
FFF	FST FLR FIN	1272	1.00	1272
GLA:	**1,670**	**3,662**		**2,192**

2013 BASE YEAR BUILDING VALUATION

Market Cost New:		**$ 159,446**
Year Built:		**2012**
Condition For Age:	AVERAGE	**2 %**
Physical:		
Functional:		
Economic:		
Temporary:		
Total Depreciation:		**2 %**
Building Value:		**$ 156,300**

OWNER INFORMATION

MCQUINN RICHARD J
MCQUINN DEBORAH K
66 WILLOW COURT

AUBURN, NH 03032

SALES HISTORY

Date	Book	Page	Type	Price	Grantor
03/28/2013	5423	914	Q I	370,600	JMJ PROPERTIES LLC
10/07/2011	5251	323	U V 12	722,000	GAGNON JEAN

PICTURE

LISTING HISTORY

03/29/13	DMPL
04/01/12	LMSL

NOTES

GREY;SUB-DIV EFF 4/12 PLAN D-36800; SLOPE ESMT ALONG FTG;3/13 HSE IS 100% COMPLETED FLAG 2014 FOR DRWY & A/C TO BE INSTALLED;05/13 DEED ADDENDUM FOR ACCESSORY DWELLING UNIT/1BR/NOT RENTAL UNIT BOOK 5436 PAGE 1721

EXTRA FEATURES VALUATION

Feature Type	Units	Lngth x Width	Size Adj	Rate	Cond	Market Value	Notes
WILLOWCOURT COMMON	1		100	5,000.00	100	5,000	
FIREPLACE 1-STAND	1		100	3,000.00	100	3,000	
						8,000	

MUNICIPAL SOFTWARE BY AVITAR

AUBURN ASSESSING OFFICE

PARCEL TOTAL TAXABLE VALUE

Year	Building	Features	Land
2011	$ 0	$ 0	$ 0
		Parcel Total:	$ 0
2013	**$ 196,700**	**$ 8,000**	**$ 169,400**
		Parcel Total:	**$ 374,100**

LAND VALUATION

Zone: RURAL **Minimum Acreage:** 3.00 **Minimum Frontage:** 300 **Site:** AVERAGE **Driveway:** PAVED **Road:** PAVED

Land Type	Units	Base Rate	NC	Adj	Site	Road	DWay	Topography	Cond	Ad Valorem	SPI	R	Tax Value	Notes
1F RES	0.930 ac	137,200	H	130	100	100	100	95 -- MILD	100	169,400	0	N	169,400	
	0.930 ac									169,400			**169,400**	

PICTURE

OWNER

MCQUINN RICHARD J
MCQUINN DEBORAH K
66 WILLOW COURT

AUBURN, NH 03032

TAXABLE DISTRICTS

District	Percentage

PERMITS

Date	Permit ID	Permit Type	Notes
03/27/13	13-154	ALTERATION	TO COMPLY WITH TOWN
09/11/12	12-406	NEW HOME	UNFINISHED BASEMENT.

BUILDING DETAILS

Model: **2.00 STORY FRAME COLONIAL**
Roof: **GABLE OR HIP/ASPHALT**
Ext: **VINYL SIDING**
Int: **DRYWALL**
Floor: **HARDWOOD/CARPET**
Heat: **GAS/FA DUCTED**
Bedrooms: **3** Baths: **2.5** Fixtures: **10**
Extra Kitchens: Fireplaces:
A/C: **No** Generators:
Quality: **A2 AVG+20**
Com. Wall:
Size Adj: **0.9275** Base Rate: **RSA 60.00**
Bldg. Rate: **1.0798**
Sq. Foot Cost: **$ 64.79**

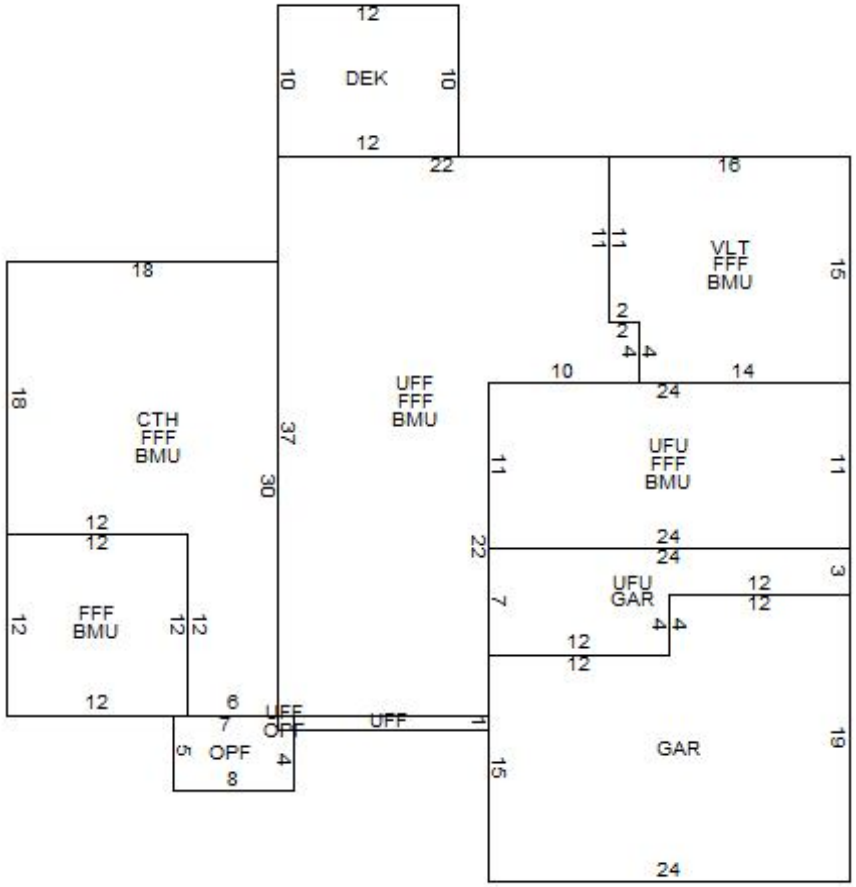

BUILDING SUB AREA DETAILS

ID	Description	Area	Adj.	Effect.
CTH	CATHEDRAL	396	0.10	40
FFF	FST FLR FIN	1682	1.00	1682
BMU	BSMNT	1682	0.15	252
UFF	UPPER FLR FIN	660	1.00	660
OPF	OPEN PORCH	40	0.25	10
VLT	VAULTED	232	0.05	12
UFU	UPPER FLR	384	0.50	192
GAR	GARAGE	528	0.45	238
DEK	DECK/ENTRANCE	120	0.10	12
GLA:	**2,342**	**5,724**		**3,098**

2013 BASE YEAR BUILDING VALUATION

Market Cost New:		**$ 200,719**
Year Built:		**2012**
Condition For Age:	AVERAGE	**2 %**
Physical:		
Functional:		
Economic:		
Temporary:		
Total Depreciation:		**2 %**
Building Value:		**$ 196,700**

OWNER INFORMATION

SOWA NILES M
SOWA KARIN A
55 WILLOW COURT

AUBURN, NH 03032

SALES HISTORY

Date	Book	Page	Type	Price	Grantor
10/17/2012	5368	260	Q I	330,533	JMJ PROPERTIES LLC
10/07/2012	5251	323	U V 12	722,000	GAGNON JEAN

PICTURE

LISTING HISTORY

03/15/13 CRVM
04/01/12 LMSL

NOTES

SUB-DIV EFF 4-12 PLAN D-36800;3/13 SPOKE W/MRS OUTSIDE; DOGS IN REAR YARD=DEK EST;

EXTRA FEATURES VALUATION

Feature Type	Units	Lngth x Width	Size Adj	Rate	Cond	Market Value	Notes
WILLOWCOURT COMMON	1		100	5,000.00	100	5,000	
						5,000	

MUNICIPAL SOFTWARE BY AVITAR

AUBURN ASSESSING OFFICE

PARCEL TOTAL TAXABLE VALUE

Year	Building	Features	Land
2011	$ 0	$ 0	$ 0
		Parcel Total:	$ 0
2013	**$ 165,700**	**$ 5,000**	**$ 165,000**
		Parcel Total:	**$ 335,700**

LAND VALUATION

Zone: RURAL **Minimum Acreage:** 3.00 **Minimum Frontage:** 300 **Site:** AVERAGE **Driveway:** PAVED **Road:** PAVED

Land Type	Units	Base Rate	NC	Adj	Site	Road	DWay	Topography	Cond	Ad Valorem	SPI	R	Tax Value	Notes
1F RES	0.840 ac	133,600	H	130	100	100	100	95 -- MILD	100	165,000	0	N	165,000	
	0.840 ac									165,000			**165,000**	

PICTURE

OWNER

SOWA NILES M
SOWA KARIN A
55 WILLOW COURT

AUBURN, NH 03032

TAXABLE DISTRICTS

District	Percentage

PERMITS

Date	Permit ID	Permit Type	Notes
04/23/12	12-149	NEW HOME	UNFINISHED BASEMENT (

BUILDING DETAILS

Model: **2.00 STORY FRAME COLONIAL**
Roof: **GABLE OR HIP/ASPHALT**
Ext: **VINYL SIDING**
Int: **DRYWALL**
Floor: **HARDWOOD/CARPET**
Heat: **GAS/FA DUCTED**
Bedrooms: **4** Baths: **2.5** Fixtures: **9**
Extra Kitchens: Fireplaces: **1**
A/C: **No** Generators:
Quality: **A2 AVG+20**
Com. Wall:
Size Adj: **0.9735** Base Rate: **RSA 60.00**
Bldg. Rate: **1.1448**
Sq. Foot Cost: **$ 68.69**

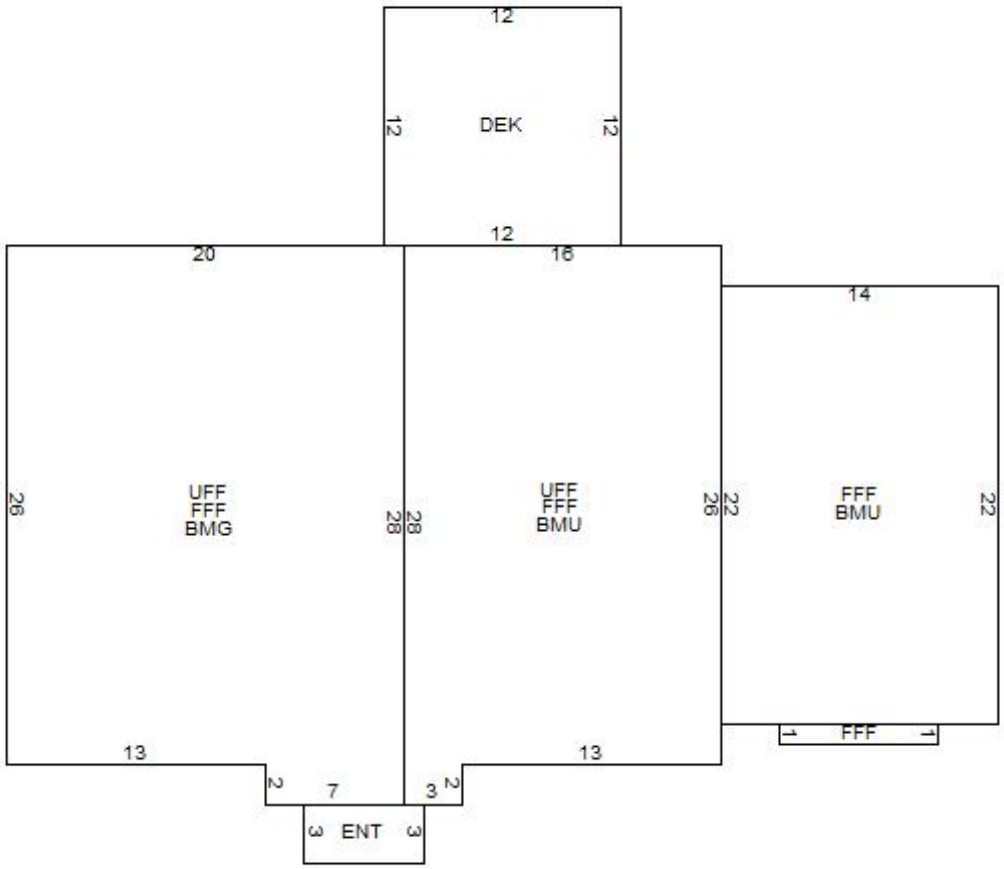

BUILDING SUB AREA DETAILS

ID	Description	Area	Adj.	Effect.
BMG	BASEMENT	534	0.20	107
UFF	UPPER FLR FIN	956	1.00	956
BMU	BSMNT	730	0.15	110
FFF	FST FLR FIN	1272	1.00	1272
ENT	ENTRANCE	18	0.10	2
DEK	DECK/ENTRANCE	144	0.10	14
GLA:	**2,228**	**3,654**		**2,461**

2013 BASE YEAR BUILDING VALUATION

Market Cost New:		**$ 169,046**
Year Built:		**2012**
Condition For Age:	AVERAGE	**2 %**
Physical:		
Functional:		
Economic:		
Temporary:		
Total Depreciation:		**2 %**
Building Value:		**$ 165,700**

OWNER INFORMATION

SMITH THOMAS R
SMITH ANNE M
39 WILLOW COURT

AUBURN, NH 03032

SALES HISTORY

Date	Book	Page	Type	Price	Grantor
08/09/2012	5344	1372	Q I	363,000	JMJ PROPERTIES LLC
10/07/2011	5251	323	U V 12	722,000	GAGNON JEAN

PICTURE

LISTING HISTORY

03/15/13 CRVM
04/01/12 LMSL

NOTES

GREY;SUB-DIV EFF 4-12 PLAN D-36800;

EXTRA FEATURES VALUATION

Feature Type	Units	Lngth x Width	Size Adj	Rate	Cond	Market Value	Notes
WILLOWCOURT COMMON	1		100	5,000.00	100	5,000	
FIREPLACE 1-STAND	1		100	3,000.00	100	3,000	GAS
						8,000	

MUNICIPAL SOFTWARE BY AVITAR

AUBURN ASSESSING OFFICE

PARCEL TOTAL TAXABLE VALUE

Year	Building	Features	Land
2011	$ 0	$ 0	$ 0
		Parcel Total:	$ 0
2013	**$ 241,300**	**$ 8,000**	**$ 170,600**
		Parcel Total:	**$ 419,900**

LAND VALUATION

Zone: RURAL **Minimum Acreage:** 3.00 **Minimum Frontage:** 300 **Site:** AVERAGE **Driveway:** PAVED **Road:** PAVED

Land Type	Units	Base Rate	NC	Adj	Site	Road	DWay	Topography	Cond	Ad Valorem	SPI	R	Tax Value	Notes
1F RES	0.780 ac	131,200	H	130	100	100	100	100 -- LEVEL	100	170,600	0	N	170,600	
	0.780 ac									170,600			**170,600**	

PICTURE

OWNER

SMITH THOMAS R
SMITH ANNE M
39 WILLOW COURT

AUBURN, NH 03032

TAXABLE DISTRICTS

District	Percentage

PERMITS

Date	Permit ID	Permit Type	Notes
12/27/11	11-462	FOUNDATION ONLY	UNFINISHED BASEMENT,
10/20/11	11-342	FOUNDATION ONLY	UNDER 2011 GROWTH MA

BUILDING DETAILS

Model: **1.75 STORY FRAME CONTEMPOR**
Roof: **GABLE OR HIP/ASPHALT**
Ext: **VINYL SIDING**
Int: **DRYWALL**
Floor: **HARDWOOD/CARPET**
Heat: **GAS/FA DUCTED**
Bedrooms: **3** Baths: **2.5** Fixtures: **9**
Extra Kitchens: Fireplaces: **1**
A/C: **Yes 100.00 %** Generators:
Quality: **A2 AVG+20**
Com. Wall:
Size Adj: **0.8953** Base Rate: **RSA 60.00**
Bldg. Rate: **1.0845**
Sq. Foot Cost: **$ 65.07**

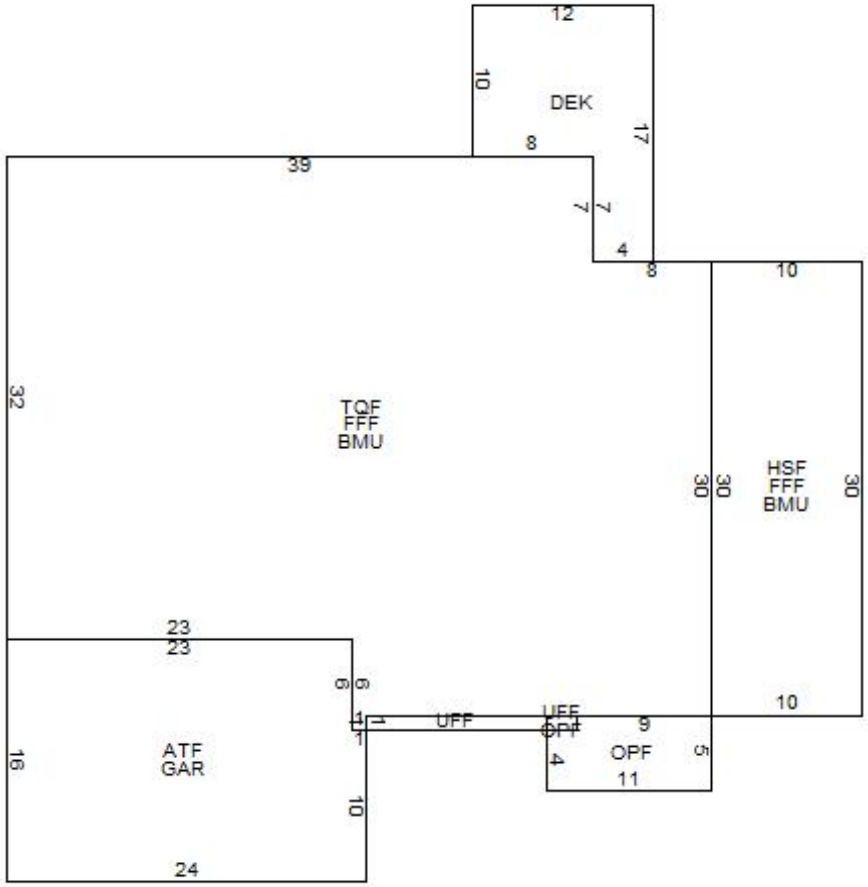

BUILDING SUB AREA DETAILS

ID	Description	Area	Adj.	Effect.
TQF	3/4 STRY FIN	1569	0.75	1177
FFF	FST FLR FIN	1869	1.00	1869
BMU	BSMNT	1869	0.15	280
DEK	DECK/ENTRANCE	148	0.10	15
HSF	1/2 STRY FIN	300	0.50	150
OPF	OPEN PORCH	55	0.25	14
ATF	ATTIC FINISHED	378	0.25	95
GAR	GARAGE	378	0.45	170
UFF	UPPER FLR FIN	14	1.00	14
GLA:	**3,305**	**6,580**		**3,784**

2013 BASE YEAR BUILDING VALUATION

Market Cost New:		**$ 246,225**
Year Built:		**2012**
Condition For Age:	AVERAGE	**2 %**
Physical:		
Functional:		
Economic:		
Temporary:		
Total Depreciation:		**2 %**
Building Value:		**$ 241,300**

OWNER INFORMATION

NOVOTNY GREGORY G
NOVOTNY DENISE A
33 WILLOW COURT

AUBURN , NH 03032

SALES HISTORY

Date	Book	Page	Type	Price	Grantor
09/10/2012	5354	1452	Q I	395,000	JMJ PROPERTIES LLC
10/07/2011	5251	323	U V 12	722,000	GAGNON JEAN

PICTURE

LISTING HISTORY

03/29/13	DMPL
04/01/12	LMSL
03/23/12	DMPL

NOTES

GRN;SUB-DIV EFF 4/12 PLAN D-36800, 6' WIDE SLOPE ESMT ALONG FTG;3/13 P/U A/C, DECK & CORRECTED FLRING, REMOVE FLAG & UC;

EXTRA FEATURES VALUATION

Feature Type	Units	Lngth x Width	Size Adj	Rate	Cond	Market Value	Notes
WILLOWCOURT COMMON	1		100	5,000.00	100	5,000	
FIREPLACE 1-STAND	1		100	3,000.00	100	3,000	GAS
						8,000	

MUNICIPAL SOFTWARE BY AVITAR

AUBURN ASSESSING OFFICE

PARCEL TOTAL TAXABLE VALUE

Year	Building	Features	Land
2011	$ 0	$ 0	$ 0
		Parcel Total:	$ 0
2013	**$ 215,800**	**$ 8,000**	**$ 168,000**
		Parcel Total:	**$ 391,800**

LAND VALUATION

Zone: RURAL **Minimum Acreage:** 3.00 **Minimum Frontage:** 300 **Site:** AVERAGE **Driveway:** PAVED **Road:** PAVED

Land Type	Units	Base Rate	NC	Adj	Site	Road	DWay	Topography	Cond	Ad Valorem	SPI	R	Tax Value	Notes
1F RES	0.730 ac	129,200	H	130	100	100	100	100 -- LEVEL	100	168,000	0	N	168,000	
	0.730 ac									168,000			**168,000**	

PICTURE

OWNER

NOVOTNY GREGORY G
NOVOTNY DENISE A
33 WILLOW COURT

AUBURN , NH 03032

TAXABLE DISTRICTS

District	Percentage

PERMITS

Date	Permit ID	Permit Type	Notes
12/22/11	11-454	FOUNDATION ONLY	UNFINISHED BASEMENT,
10/20/11	11-343	FOUNDATION ONLY	UNDER 2011 GROWTH MA

BUILDING DETAILS

Model: **1.75 STORY FRAME CAPE**
Roof: **GABLE OR HIP/ASPHALT**
Ext: **VINYL SIDING**
Int: **DRYWALL**
Floor: **HARDWOOD/CARPET**
Heat: **GAS/FA DUCTED**
Bedrooms: **3** Baths: **2.5** Fixtures: **10**
Extra Kitchens: Fireplaces: **1**
A/C: **Yes 100.00 %** Generators:
Quality: **A2 AVG+20**
Com. Wall:
Size Adj: **0.9163** Base Rate: **RSA 60.00**
Bldg. Rate: **1.1099**
Sq. Foot Cost: **$ 66.59**

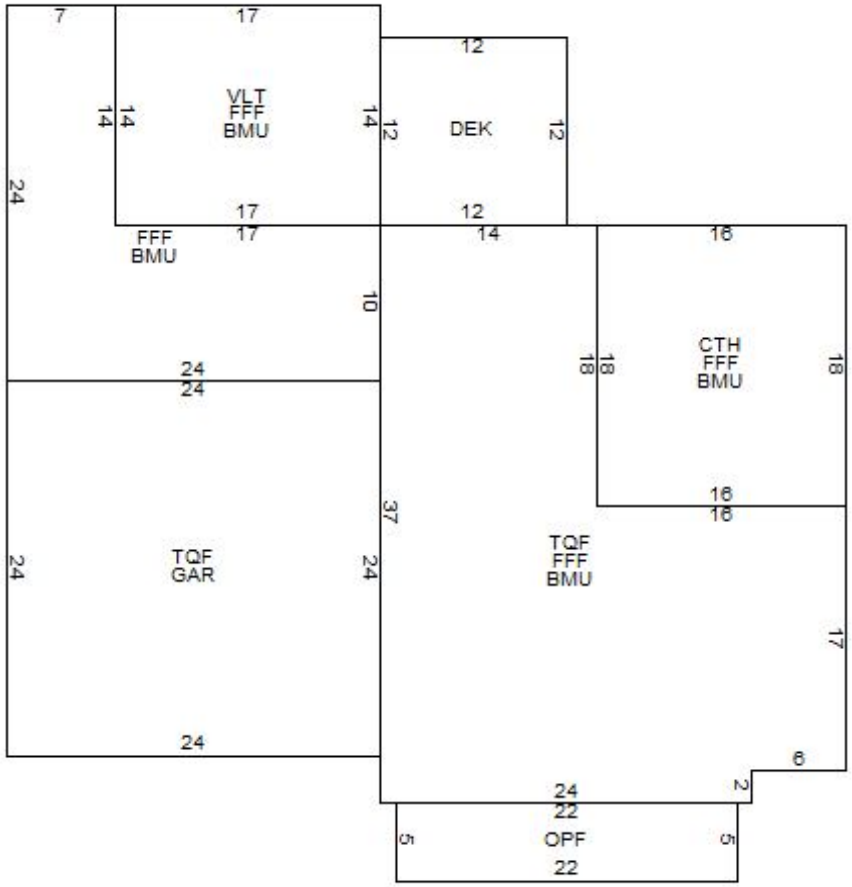

BUILDING SUB AREA DETAILS

ID	Description	Area	Adj.	Effect.
FFF	FST FLR FIN	1674	1.00	1674
BMU	BSMNT	1674	0.15	251
VLT	VAULTED	238	0.05	12
TQF	3/4 STRY FIN	1386	0.75	1040
GAR	GARAGE	576	0.45	259
OPF	OPEN PORCH	110	0.25	28
CTH	CATHEDRAL	288	0.10	29
DEK	DECK/ENTRANCE	144	0.10	14
GLA:	**2,714**	**6,090**		**3,307**

2013 BASE YEAR BUILDING VALUATION

Market Cost New:		**$ 220,213**
Year Built:		**2012**
Condition For Age:	AVERAGE	**2 %**
Physical:		
Functional:		
Economic:		
Temporary:		
Total Depreciation:		**2 %**
Building Value:		**$ 215,800**

OWNER INFORMATION

PIKE BRANDON J
PIKE STEPHANIE L
29 WILLOW COURT

AUBURN, NH 03032

SALES HISTORY

Date	Book	Page	Type	Price	Grantor
12/19/2012	5390	1895	Q I	398,000	JMJ PROPERTIES LLC
10/07/2011	5251	323	U V 12	722,000	GAGNON JEAN

PICTURE

LISTING HISTORY

03/15/13 CRVM
04/01/12 LMSL
03/23/12 DMPL

NOTES

BEIGE;SUB-DIV EFF 4/12 PLAN D-36800, 10' WIDE SLOPE ESMT ALONG FTG; CTH EST

EXTRA FEATURES VALUATION

Feature Type	Units	Lngth x Width	Size Adj	Rate	Cond	Market Value	Notes
WILLOWCOURT COMMON	1		100	5,000.00	100	5,000	
FIREPLACE 1-STAND	1		100	3,000.00	100	3,000	GAS
						8,000	

MUNICIPAL SOFTWARE BY AVITAR

AUBURN ASSESSING OFFICE

PARCEL TOTAL TAXABLE VALUE

Year	Building	Features	Land
2011	$ 0	$ 0	$ 0
		Parcel Total:	$ 0
2013	**$ 233,700**	**$ 8,000**	**$ 171,600**
		Parcel Total:	**$ 413,300**

LAND VALUATION

Zone: RURAL **Minimum Acreage:** 3.00 **Minimum Frontage:** 300 **Site:** AVERAGE **Driveway:** PAVED **Road:** PAVED

Land Type	Units	Base Rate	NC	Adj	Site	Road	DWay	Topography	Cond	Ad Valorem	SPI	R	Tax Value	Notes
1F RES	0.800 ac	132,000	H	130	100	100	100	100 -- LEVEL	100	171,600	0	N	171,600	
	0.800 ac									171,600			**171,600**	

PICTURE

OWNER

PIKE BRANDON J
PIKE STEPHANIE L
29 WILLOW COURT

AUBURN, NH 03032

TAXABLE DISTRICTS

District	Percentage

PERMITS

Date	Permit ID	Permit Type	Notes
11/15/11	11-384	FOUNDATION ONLY	UNFINISHED BASEMENT,
10/20/11	11-344	FOUNDATION ONLY	UNDER 2011 GROWTH MA

BUILDING DETAILS

Model: **2.00 STORY FRAME COLONIAL**
Roof: **GABLE OR HIP/ASPHALT**
Ext: **VINYL SIDING**
Int: **DRYWALL**
Floor: **HARDWOOD/CARPET**
Heat: **GAS/FA DUCTED**
Bedrooms: **4** Baths: **2.5** Fixtures: **10**
Extra Kitchens: Fireplaces: **1**
A/C: **Yes 100.00 %** Generators:
Quality: **A2 AVG+20**
Com. Wall:
Size Adj: **0.9028** Base Rate: **RSA 60.00**
Bldg. Rate: **1.1042**
Sq. Foot Cost: **$ 66.25**

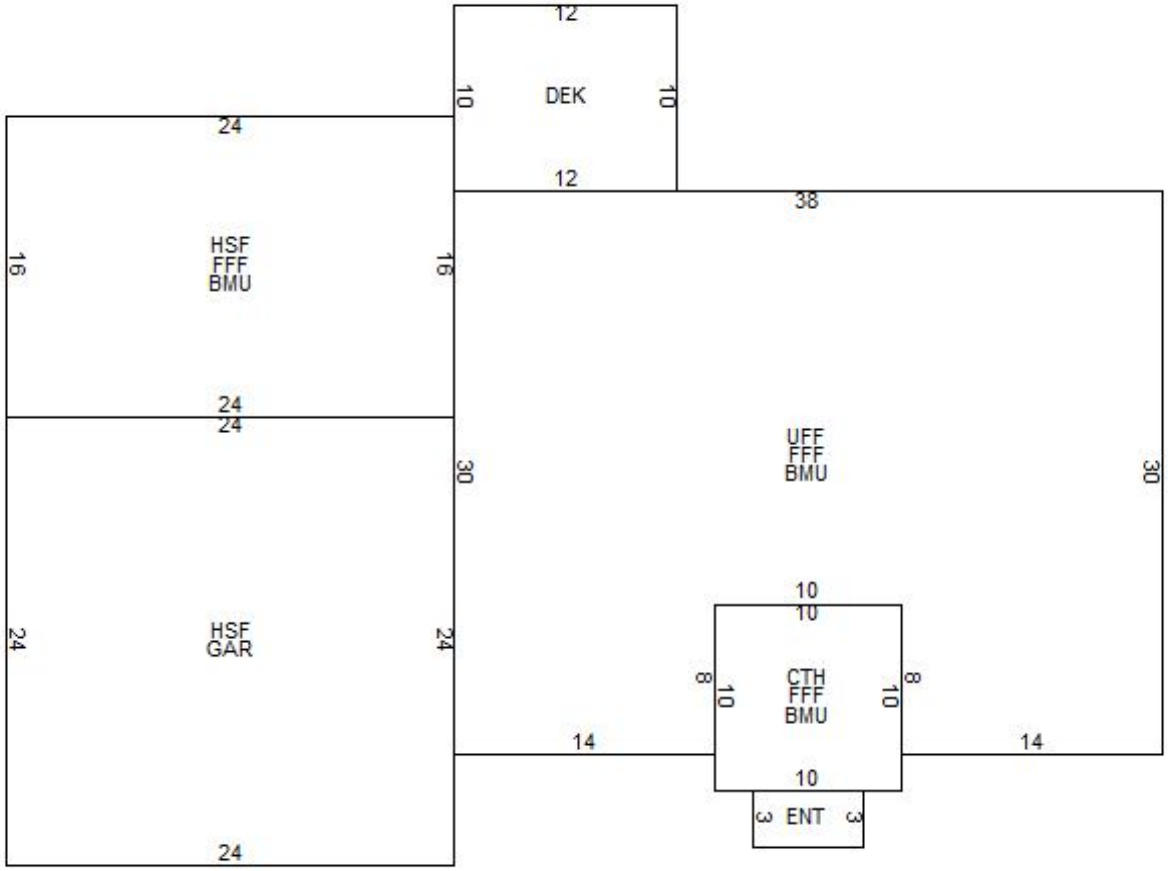

BUILDING SUB AREA DETAILS

ID	Description	Area	Adj.	Effect.
UFF	UPPER FLR FIN	1060	1.00	1060
FFF	FST FLR FIN	1544	1.00	1544
BMU	BSMNT	1544	0.15	232
ENT	ENTRANCE	18	0.10	2
DEK	DECK/ENTRANCE	120	0.10	12
HSF	1/2 STRY FIN	960	0.50	480
GAR	GARAGE	576	0.45	259
CTH	CATHEDRAL	100	0.10	10
GLA:	**3,084**	**5,922**		**3,599**

2013 BASE YEAR BUILDING VALUATION

Market Cost New:		**$ 238,434**
Year Built:		**2012**
Condition For Age:	AVERAGE	**2 %**
Physical:		
Functional:		
Economic:		
Temporary:		
Total Depreciation:		**2 %**
Building Value:		**$ 233,700**

OWNER INFORMATION

LAWRENCE MICHAEL L
LAWRENCE SARAH A
21 WILLOW COURT

AUBURN, NH 03032

SALES HISTORY

Date	Book	Page	Type	Price	Grantor
08/23/2012	5348	1823	Q I	357,000	JMJ PROPERTIES LLC
10/07/2011	5251	323	U V 12	722,000	GAGNON JEAN

PICTURE

LISTING HISTORY

03/15/13 CRVM
04/01/12 LMSL
03/23/12 DMPL

NOTES

BLUE;SUB-DIV EFF 4/12 PLAN D-36800, 10' WIDW SLOPE ESMT ALONG FTG;3/12 P/U NEW HSE/HSE IS 55% COMPLETED, WEATHER TIGHT W/ROOF, WIRING - FLAG 2013

EXTRA FEATURES VALUATION

Feature Type	Units	Lngth x Width	Size Adj	Rate	Cond	Market Value	Notes
WILLOWCOURT COMMON	1		100	5,000.00	100	5,000	
FIREPLACE 1-STAND	1		100	3,000.00	100	3,000	GAS
						8,000	

MUNICIPAL SOFTWARE BY AVITAR

AUBURN ASSESSING OFFICE

PARCEL TOTAL TAXABLE VALUE

Year	Building	Features	Land
2011	$ 0	$ 0	$ 0
		Parcel Total:	$ 0
2013	**$ 186,600**	**$ 8,000**	**$ 159,600**
		Parcel Total:	**$ 354,200**

LAND VALUATION

Zone: RURAL **Minimum Acreage:** 3.00 **Minimum Frontage:** 300 **Site:** AVERAGE **Driveway:** PAVED **Road:** PAVED

Land Type	Units	Base Rate	NC	Adj	Site	Road	DWay	Topography	Cond	Ad Valorem	SPI	R	Tax Value	Notes
1F RES	0.730 ac	129,200	H	130	100	100	100	95 -- MILD	100	159,600	0	N	159,600	
	0.730 ac									159,600			**159,600**	

PICTURE

OWNER

LAWRENCE MICHAEL L
LAWRENCE SARAH A
21 WILLOW COURT

AUBURN, NH 03032

TAXABLE DISTRICTS

District	Percentage

PERMITS

Date	Permit ID	Permit Type	Notes
04/18/12	12-143	NEW HOME	BUILDING PERMIT FOR FC
09/26/11	11-292	NEW HOME	NEW HOME UNDER 2011 C

BUILDING DETAILS

Model: **2.00 STORY FRAME COLONIAL**
Roof: **GABLE OR HIP/ASPHALT**
Ext: **VINYL SIDING**
Int: **DRYWALL**
Floor: **HARDWOOD/CARPET**
Heat: **GAS/FA DUCTED**
Bedrooms: **4** Baths: **2.5** Fixtures: **10**
Extra Kitchens: Fireplaces: **1**
A/C: **Yes 100.00 %** Generators:
Quality: **A2 AVG+20**
Com. Wall:
Size Adj: **0.9517** Base Rate: **RSA 60.00**
Bldg. Rate: **1.1640**
Sq. Foot Cost: **$ 69.84**

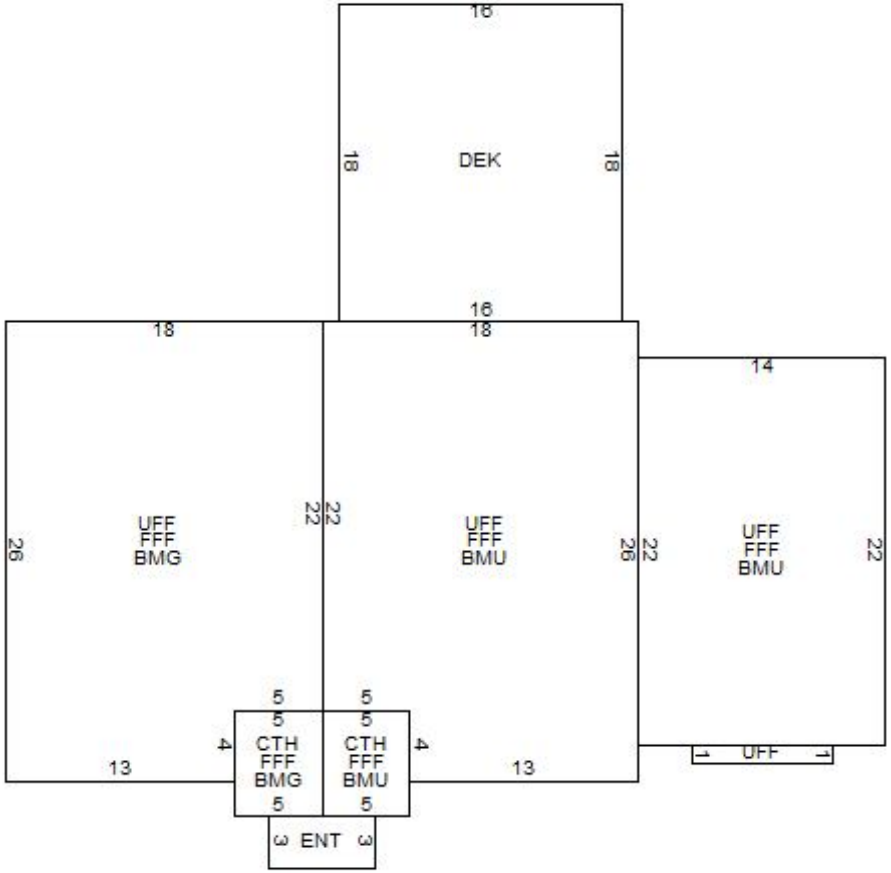

BUILDING SUB AREA DETAILS

ID	Description	Area	Adj.	Effect.
BMU	BSMNT	786	0.15	118
UFF	UPPER FLR FIN	1212	1.00	1212
FFF	FST FLR FIN	1264	1.00	1264
CTH	CATHEDRAL	60	0.10	6
BMG	BASEMENT	478	0.20	96
DEK	DECK/ENTRANCE	288	0.10	29
ENT	ENTRANCE	18	0.10	2
GLA:	**2,476**	**4,106**		**2,727**

2013 BASE YEAR BUILDING VALUATION

Market Cost New:		**$ 190,454**
Year Built:		**2012**
Condition For Age:	AVERAGE	**2 %**
Physical:		
Functional:		
Economic:		
Temporary:		
Total Depreciation:		**2 %**
Building Value:		**$ 186,600**

OWNER INFORMATION

DUPREY THOMAS W
DUPREY KELLY J
13 WILLOW COURT

AUBURN, NH 03032

SALES HISTORY

Date	Book	Page	Type	Price	Grantor
11/19/2012	5379	1486	Q I	337,000	JMJ PROPERTIES LLC
10/07/2011	5251	323	U V 12	722,000	GAGNON JEAN

PICTURE

LISTING HISTORY

03/15/13 CRVM
04/01/12 LMSL
03/23/12 DMPM

NOTES

BEIGE;SUB-DIV EFF 4/12 PLAN D-36800;3/12 P/U NEW HSE/EST 100% COMPLETED "MODEL HOME" FLAG 2013 FOR LANDSCRAPING;3/13 PROPERTY DROPS OFF IN REAR;

EXTRA FEATURES VALUATION

Feature Type	Units	Lngth x Width	Size Adj	Rate	Cond	Market Value	Notes
WILLOWCOURT COMMON	1		100	5,000.00	100	5,000	
FIREPLACE 1-STAND	1		100	3,000.00	100	3,000	GAS
						8,000	

MUNICIPAL SOFTWARE BY AVITAR

AUBURN ASSESSING OFFICE

PARCEL TOTAL TAXABLE VALUE

Year	Building	Features	Land
2011	$ 0	$ 0	$ 0
		Parcel Total:	$ 0
2013	**$ 188,900**	**$ 8,000**	**$ 156,100**
		Parcel Total:	**$ 353,000**

LAND VALUATION

Zone: RURAL **Minimum Acreage:** 3.00 **Minimum Frontage:** 300 **Site:** AVERAGE **Driveway:** PAVED **Road:** PAVED

Land Type	Units	Base Rate	NC	Adj	Site	Road	DWay	Topography	Cond	Ad Valorem	SPI	R	Tax Value	Notes
1F RES	0.660 ac	126,400	H	130	100	100	100	95 -- MILD	100	156,100	0	N	156,100	
	0.660 ac									156,100			**156,100**	

PICTURE

OWNER

DUPREY THOMAS W
DUPREY KELLY J
13 WILLOW COURT

AUBURN, NH 03032

TAXABLE DISTRICTS

District	Percentage

PERMITS

Date	Permit ID	Permit Type	Notes
09/07/11	11-262	NEW HOME	UNFINISHED BASEMENT,

BUILDING DETAILS

Model: **2.00 STORY FRAME COLONIAL**
Roof: **GABLE OR HIP/ASPHALT**
Ext: **VINYL SIDING**
Int: **DRYWALL**
Floor: **HARDWOOD/CARPET**
Heat: **GAS/FA DUCTED**
Bedrooms: **4** Baths: **2.5** Fixtures: **9**
Extra Kitchens: Fireplaces: **1**
A/C: **Yes 100.00 %** Generators:
Quality: **A2 AVG+20**
Com. Wall:
Size Adj: **0.9486** Base Rate: **RSA 60.00**
Bldg. Rate: **1.1602**
Sq. Foot Cost: **$ 69.61**

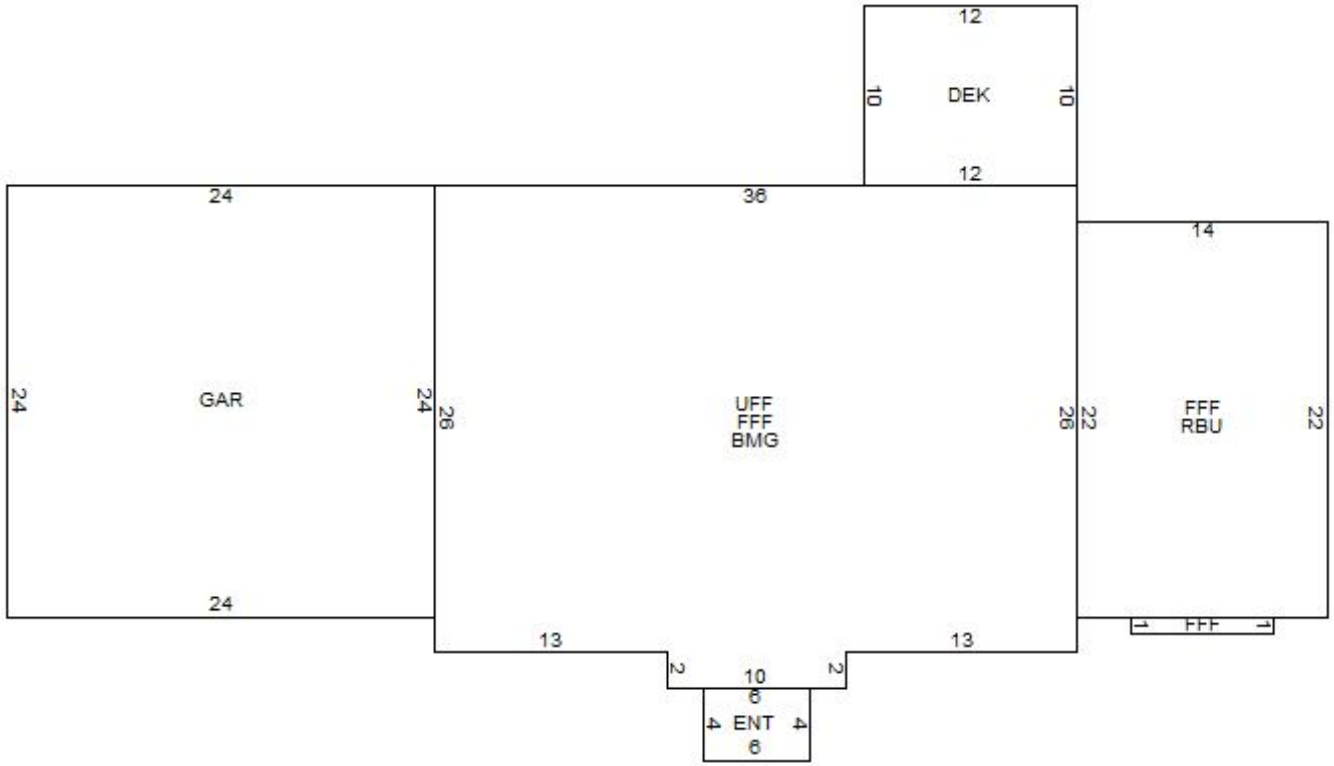

BUILDING SUB AREA DETAILS

ID	Description	Area	Adj.	Effect.
GAR	GARAGE	576	0.45	259
UFF	UPPER FLR FIN	956	1.00	956
FFF	FST FLR FIN	1272	1.00	1272
BMG	BASEMENT	956	0.20	191
DEK	DECK/ENTRANCE	120	0.10	12
RBU	RAISED BSMNT	308	0.25	77
ENT	ENTRANCE	24	0.10	2
GLA:	**2,228**	**4,212**		**2,769**

2013 BASE YEAR BUILDING VALUATION

Market Cost New:		**$ 192,750**
Year Built:		**2012**
Condition For Age:	AVERAGE	**2 %**
Physical:		
Functional:		
Economic:		
Temporary:		
Total Depreciation:		**2 %**
Building Value:		**$ 188,900**

OWNER INFORMATION

DUREPO BETHANN H
DUREPO DAVID J
5 HAWTHORNE DRIVE

AUBURN, NH 03032

SALES HISTORY

Date	Book	Page	Type	Price	Grantor
09/27/2012	5360	2456	Q I	439,933	CHESTER HILL LLC

PICTURE

LISTING HISTORY

03/15/13 CRVM
04/22/11 DMPL

NOTES

BRN; SUB-DIV D-36448; 4/11 PU NEW HSE, USED AS MODEL HSE 100%; GEO THERMO SYS;3/13 HO ANS Q'S @ DOOR;

EXTRA FEATURES VALUATION

Feature Type	Units	Lngth x Width	Size Adj	Rate	Cond	Market Value	Notes
FIREPLACE 1-STAND	1		100	3,000.00	100	3,000	GAS
HAWTHORNE DR	1		100	5,000.00	100	5,000	
						8,000	

MUNICIPAL SOFTWARE BY AVITAR

AUBURN ASSESSING OFFICE

PARCEL TOTAL TAXABLE VALUE

Year	Building	Features	Land
2011	$ 230,400	$ 8,000	$ 164,800
		Parcel Total:	$ 403,200
2013	**$ 211,800**	**$ 8,000**	**$ 189,600**
		Parcel Total:	**$ 409,400**

LAND VALUATION

Zone: RURAL **Minimum Acreage:** 3.00 **Minimum Frontage:** 300 **Site:** AVERAGE **Driveway:** PAVED **Road:** PAVED

Land Type	Units	Base Rate	NC	Adj	Site	Road	DWay	Topography	Cond	Ad Valorem	SPI	R	Tax Value	Notes
1F RES	2.470 ac	145,880	H	130	100	100	100	100 -- LEVEL	100	189,600	0	N	189,600	
	2.470 ac									189,600			**189,600**	

PICTURE

OWNER

DUREPO BETHANN H
DUREPO DAVID J
5 HAWTHORNE DRIVE

AUBURN, NH 03032

TAXABLE DISTRICTS

District	Percentage

PERMITS

Date	Permit ID	Permit Type	Notes
08/24/10	10-239	REMODEL	
08/18/10	10-225	NEW HOME	SUBCONTRACTORS TO SE

BUILDING DETAILS

Model: **2.00 STORY FRAME COLONIAL**
Roof: **GABLE OR HIP/ASPHALT**
Ext: **VINYL SIDING**
Int: **DRYWALL**
Floor: **CARPET/HARDWOOD**
Heat: **ELECTRIC/HEAT PUMP**
Bedrooms: **3** Baths: **2.5** Fixtures: **10**
Extra Kitchens: Fireplaces:
A/C: **Yes 100.00 %** Generators:
Quality: **A3 AVG+30**
Com. Wall:
Size Adj: **0.9308** Base Rate: **RSA 60.00**
Bldg. Rate: **1.2214**
Sq. Foot Cost: **$ 73.28**

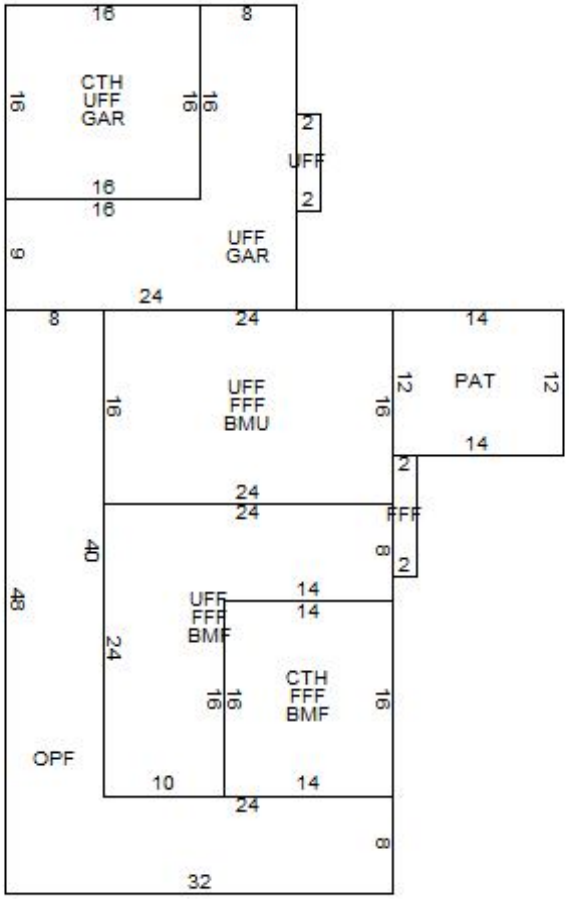

BUILDING SUB AREA DETAILS

ID	Description	Area	Adj.	Effect.
CTH	CATHEDRAL	480	0.10	48
UFF	UPPER FLR FIN	1352	1.00	1352
GAR	GARAGE	600	0.45	270
OPF	OPEN PORCH	576	0.25	144
FFF	FST FLR FIN	980	1.00	980
BMU	BSMNT	384	0.15	58
BMF	BSMNT FINISHED	576	0.30	173
PAT	PATIO	168	0.10	17
GLA:	**2,332**	**5,116**		**3,042**

2013 BASE YEAR BUILDING VALUATION

Market Cost New:		**$ 222,918**
Year Built:		**2010**
Condition For Age:	AVERAGE	**5 %**
Physical:		
Functional:		
Economic:		
Temporary:		
Total Depreciation:		**5 %**
Building Value:		**$ 211,800**

OWNER INFORMATION

DINNSEN JAMIE
DINNSEN DOUGLAS K
21 HAWTHORNE DRIVE

AUBURN, NH 03032

SALES HISTORY

Date	Book	Page	Type	Price	Grantor
10/24/2012	5369	2999	Q I	435,133	CHESTER HILL LLC

PICTURE

LISTING HISTORY

06/24/13 DMHL
03/15/13 CRVM

NOTES

BLUESUB-DIV D-36448;6/13 PER H/O 4BR SEPTIC ON PROPERTY FOR FUTURE IN-LAW EXPANSION, 2 ROOMS IN HOME USED AS OFFICE BUT HAVE CLOSETS, THEREFORE LISTED AS POTENTIAL BEDROOMS, HO HAS INTENTION OF FINISHING BONUS ROOM OVER GARAGE AND BASEMENT AREA

EXTRA FEATURES VALUATION

Feature Type	Units	Lngth x Width	Size Adj	Rate	Cond	Market Value	Notes
FIREPLACE 1-STAND	1		100	3,000.00	100	3,000	GAS
HAWTHORNE DR	1		100	5,000.00	100	5,000	
						8,000	

MUNICIPAL SOFTWARE BY AVITAR

AUBURN ASSESSING OFFICE

PARCEL TOTAL TAXABLE VALUE

Year	Building	Features	Land
2011	$ 0	$ 0	$ 166,000
		Parcel Total:	$ 166,000
2013	**$ 221,600**	**$ 8,000**	**$ 190,700**
		Parcel Total:	**$ 420,300**

LAND VALUATION

Zone: RURAL **Minimum Acreage:** 3.00 **Minimum Frontage:** 300 **Site:** AVERAGE **Driveway:** PAVED **Road:** PAVED

Land Type	Units	Base Rate	NC	Adj	Site	Road	DWay	Topography	Cond	Ad Valorem	SPI	R	Tax Value	Notes
1F RES	2.670 ac	146,680	H	130	100	100	100	100 -- LEVEL	100	190,700	0	N	190,700	
	2.670 ac									190,700			**190,700**	

PICTURE

OWNER

DINNSEN JAMIE
DINNSEN DOUGLAS K
21 HAWTHORNE DRIVE

AUBURN, NH 03032

TAXABLE DISTRICTS

District	Percentage

PERMITS

Date	Permit ID	Permit Type	Notes
06/06/12	12-224	NEW HOME	UNFINISHED BONUS ROO

BUILDING DETAILS

Model: **2.00 STORY FRAME COLONIAL**
Roof: **GABLE OR HIP/ASPHALT**
Ext: **VINYL SIDING**
Int: **DRYWALL**
Floor: **HARDWOOD/CARPET**
Heat: **ELECTRIC/HEAT PUMP**
Bedrooms: **5** Baths: **4.0** Fixtures: **14**
Extra Kitchens: Fireplaces:
A/C: **Yes 100.00 %** Generators:
Quality: **A2 AVG+20**
Com. Wall:
Size Adj: **0.9168** Base Rate: **RSA 60.00**
Bldg. Rate: **1.1428**
Sq. Foot Cost: **$ 68.57**

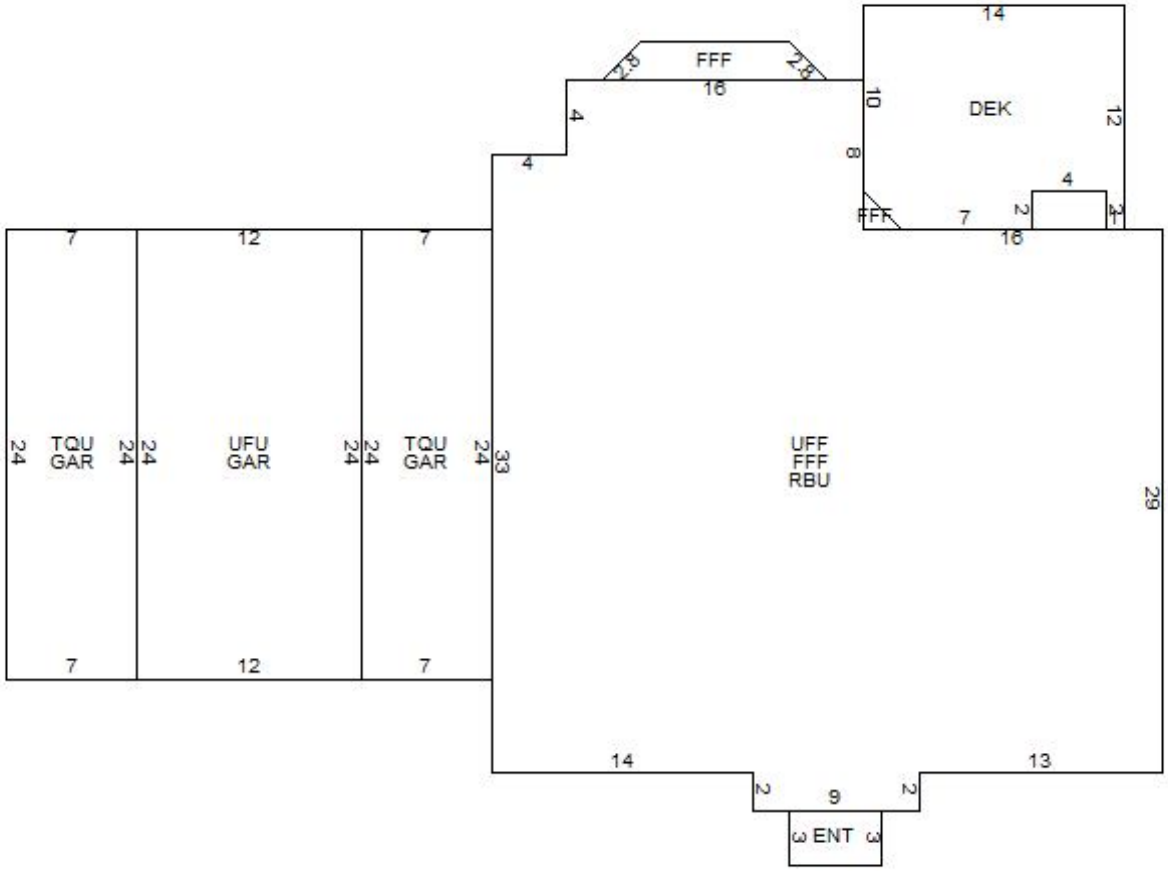

BUILDING SUB AREA DETAILS

ID	Description	Area	Adj.	Effect.
UFF	UPPER FLR FIN	1206	1.00	1206
FFF	FST FLR FIN	1228	1.00	1228
RBU	RAISED BSMNT	1206	0.25	302
UFU	UPPER FLR	288	0.50	144
DEK	DECK/ENTRANCE	158	0.10	16
ENT	ENTRANCE	15	0.10	2
TQU	3/4 STRY UNFIN	336	0.35	118
GAR	GARAGE	624	0.45	281
GLA:	**2,434**	**5,061**		**3,297**

2013 BASE YEAR BUILDING VALUATION

Market Cost New:		**$ 226,075**
Year Built:		**2012**
Condition For Age:	AVERAGE	**2 %**
Physical:		
Functional:		
Economic:		
Temporary:		
Total Depreciation:		**2 %**
Building Value:		**$ 221,600**

OWNER INFORMATION

CALANDRA ANTHONY J
CALANDRA JENNIFER
59 HAWTHORNE DRIVE

AUBURN, NH 03032

SALES HISTORY

Date	Book	Page	Type	Price	Grantor
12/31/2012	5394	1292	Q I	463,533	CHESTER HILL LLC

PICTURE

LISTING HISTORY

04/01/13 DMPM

NOTES

BRN; SUB-DIV D-36448; 4/13 P/U NEW HSE EST INT & EST HSE IS 100% COMPLETED/GEO THERMO;

EXTRA FEATURES VALUATION

Feature Type	Units	Lngth x Width	Size Adj	Rate	Cond	Market Value	Notes
HAWTHORNE DR	1		100	5,000.00	100	5,000	
FIREPLACE 1-STAND	1		100	3,000.00	100	3,000	
						8,000	

MUNICIPAL SOFTWARE BY AVITAR

AUBURN ASSESSING OFFICE

PARCEL TOTAL TAXABLE VALUE

Year	Building	Features	Land
2011	$ 0	$ 0	$ 154,400
		Parcel Total:	$ 154,400
2013	**$ 238,300**	**$ 8,000**	**$ 175,200**
		Parcel Total:	**$ 421,500**

LAND VALUATION

Zone: RURAL **Minimum Acreage:** 3.00 **Minimum Frontage:** 300 **Site:** AVERAGE **Driveway:** PAVED **Road:** PAVED

Land Type	Units	Base Rate	NC	Adj	Site	Road	DWay	Topography	Cond	Ad Valorem	SPI	R	Tax Value	Notes
1F RES	0.870 ac	134,800	H	130	100	100	100	100 -- LEVEL	100	175,200	0	N	175,200	
	0.870 ac									175,200			**175,200**	

PICTURE

OWNER

CALANDRA ANTHONY J
CALANDRA JENNIFER
59 HAWTHORNE DRIVE

AUBURN, NH 03032

TAXABLE DISTRICTS

District	Percentage

PERMITS

Date	Permit ID	Permit Type	Notes
09/10/12	12-404	NEW HOME	UNFINISHED BASEMENT,

BUILDING DETAILS

Model: **2.00 STORY FRAME COLONIAL**
Roof: **GABLE OR HIP/ASPHALT**
Ext: **VINYL SIDING**
Int: **DRYWALL**
Floor: **HARDWOOD**
Heat: **ELECTRIC/HEAT PUMP**
Bedrooms: **4** Baths: **2.5** Fixtures:
Extra Kitchens: Fireplaces:
A/C: **No** Generators:
Quality: **A3 AVG+30**
Com. Wall:
Size Adj: **0.9048** Base Rate: **RSA 60.00**
Bldg. Rate: **1.1412**
Sq. Foot Cost: **$ 68.47**

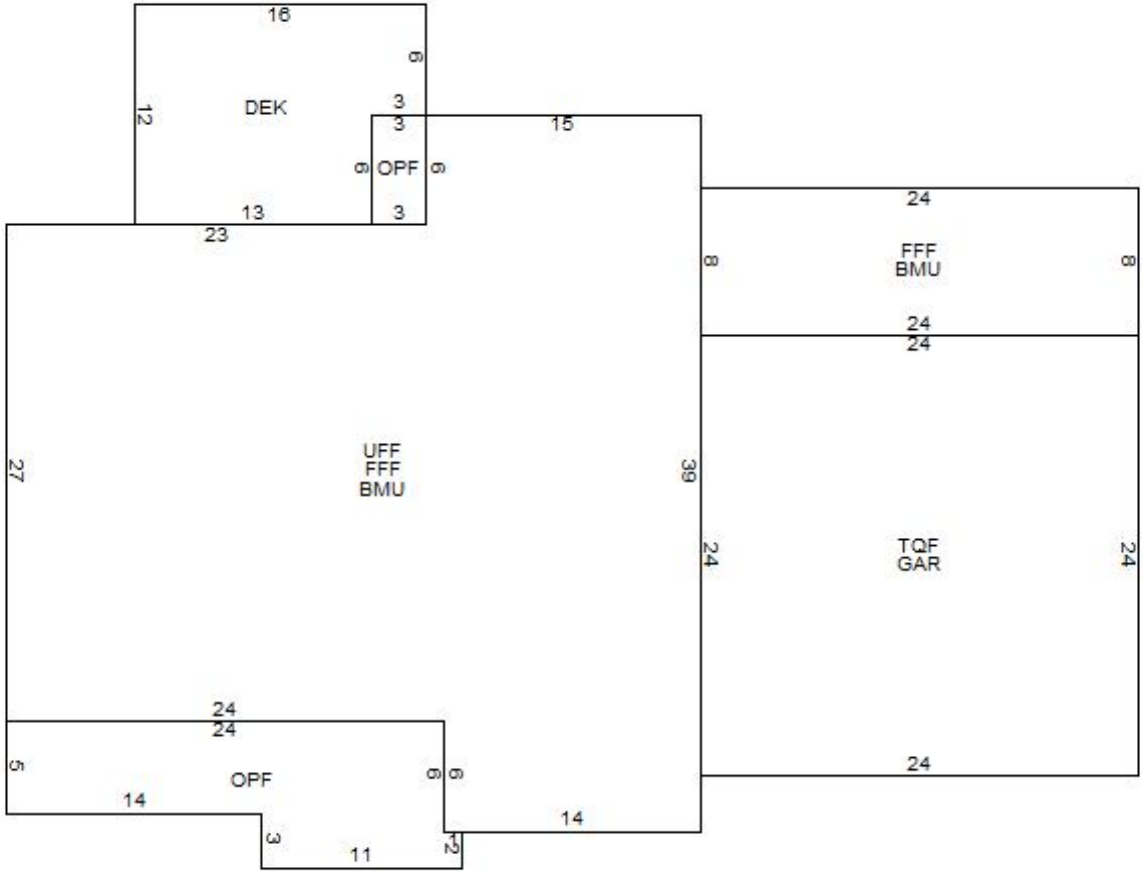

BUILDING SUB AREA DETAILS

ID	Description	Area	Adj.	Effect.
UFF	UPPER FLR FIN	1200	1.00	1200
FFF	FST FLR FIN	1392	1.00	1392
BMU	BSMNT	1392	0.15	209
OPF	OPEN PORCH	170	0.25	43
DEK	DECK/ENTRANCE	174	0.10	17
TQF	3/4 STRY FIN	576	0.75	432
GAR	GARAGE	576	0.45	259
GLA:	**3,024**	**5,480**		**3,552**

2013 BASE YEAR BUILDING VALUATION

Market Cost New:		**$ 243,205**
Year Built:		**2012**
Condition For Age:	AVERAGE	**2 %**
Physical:		
Functional:		
Economic:		
Temporary:		
Total Depreciation:		**2 %**
Building Value:		**$ 238,300**

OWNER INFORMATION

CYR EDWARD
CYR PATRICIA
67 HAWTHORNE DRIVE

AUBURN, NH 03032

SALES HISTORY

Date	Book	Page	Type	Price	Grantor
12/10/2012	5386	2360	Q I	399,800	CHESTER HILL LLC

PICTURE

LISTING HISTORY

03/15/13 CRVL

NOTES

SUB-DIV D-36448;3/13 OPEN CONCEPT, NO FPL;

EXTRA FEATURES VALUATION

Feature Type	Units	Lngth x Width	Size Adj	Rate	Cond	Market Value	Notes
HAWTHORNE DR	1		100	5,000.00	100	5,000	
						5,000	

MUNICIPAL SOFTWARE BY AVITAR.

AUBURN ASSESSING OFFICE

PARCEL TOTAL TAXABLE VALUE

Year	Building	Features	Land
2011	$ 0	$ 0	$ 152,800
		Parcel Total:	$ 152,800
2013	**$ 201,300**	**$ 5,000**	**$ 168,000**
		Parcel Total:	**$ 374,300**

LAND VALUATION

Zone: RURAL **Minimum Acreage:** 3.00 **Minimum Frontage:** 300 **Site:** AVERAGE **Driveway:** PAVED **Road:** PAVED

Land Type	Units	Base Rate	NC	Adj	Site	Road	DWay	Topography	Cond	Ad Valorem	SPI	R	Tax Value	Notes
1F RES	0.730 ac	129,200	H	130	100	100	100	100 -- LEVEL	100	168,000	0	N	168,000	
	0.730 ac									168,000			**168,000**	

PICTURE

OWNER

CYR EDWARD
CYR PATRICIA
67 HAWTHORNE DRIVE

AUBURN, NH 03032

TAXABLE DISTRICTS

District	Percentage

PERMITS

Date	Permit ID	Permit Type	Notes
08/22/12	12-369	NEW HOME	UNFINISHED BASEMENT,

BUILDING DETAILS

Model: **1.00 STORY FRAME RANCH**
Roof: **GABLE OR HIP/ASPHALT**
Ext: **VINYL SIDING**
Int: **DRYWALL**
Floor: **HARDWOOD/CARPET**
Heat: **ELECTRIC/HEAT PUMP**
Bedrooms: **3** Baths: **2.0** Fixtures: **6**
Extra Kitchens: Fireplaces:
A/C: **Yes 100.00 %** Generators:
Quality: **A3 AVG+30**
Com. Wall:
Size Adj: **0.9530** Base Rate: **RSA 60.00**
Bldg. Rate: **1.2637**
Sq. Foot Cost: **$ 75.82**

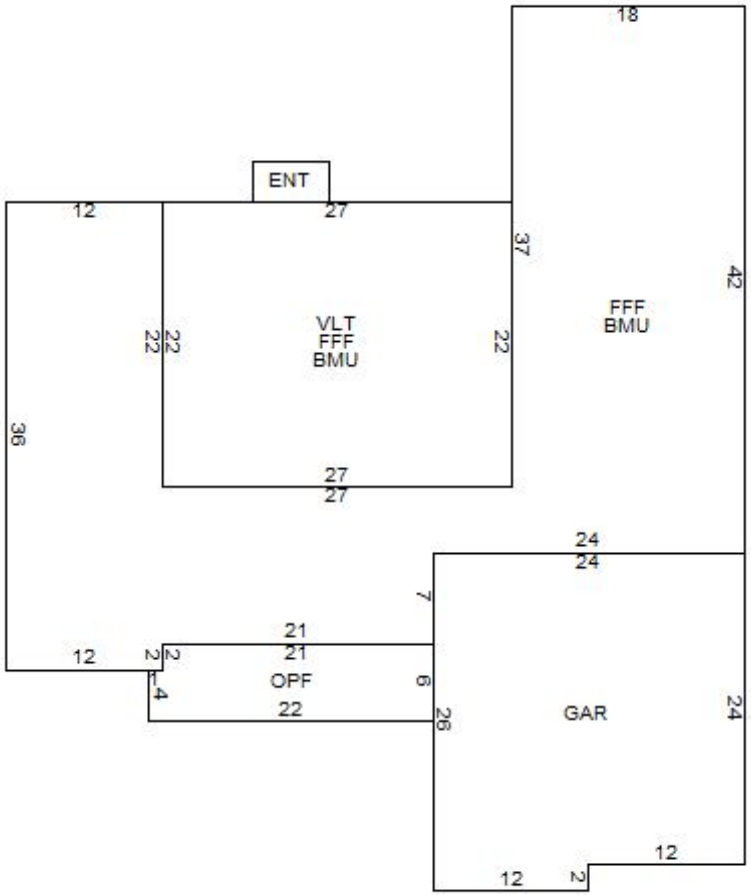

BUILDING SUB AREA DETAILS

ID	Description	Area	Adj.	Effect.
GAR	GARAGE	600	0.45	270
FFF	FST FLR FIN	2064	1.00	2064
BMU	BSMNT	2064	0.15	310
OPF	OPEN PORCH	130	0.25	33
VLT	VAULTED	594	0.05	30
ENT	ENTRANCE	18	0.10	2
GLA:	**2,064**	**5,470**		**2,709**

2013 BASE YEAR BUILDING VALUATION

Market Cost New:		**$ 205,396**
Year Built:		**2012**
Condition For Age:	AVERAGE	**2 %**
Physical:		
Functional:		
Economic:		
Temporary:		
Total Depreciation:		**2 %**
Building Value:		**$ 201,300**

OWNER INFORMATION

SHEIDOW MATTHEW
SHEIDOW MARGARET
69 HAWTHORNE DRIVE

AUBURN, NH 03032

SALES HISTORY

Date	Book	Page	Type	Price	Grantor
12/04/2012	5384	1310	Q I	382,933	CHESTER HILL LLC

PICTURE

LISTING HISTORY

04/01/13 DMPM

NOTES

GRN; SUB-DIV D-36448; 4/13 P/U NEW HSE, NOH EST HSE IS 100% COMPLETED/GEO THERMO;

EXTRA FEATURES VALUATION

Feature Type	Units	Lngth x Width	Size Adj	Rate	Cond	Market Value	Notes
HAWTHORNE DR	1		100	5,000.00	100	5,000	
						5,000	

MUNICIPAL SOFTWARE BY AVITAR

AUBURN ASSESSING OFFICE

PARCEL TOTAL TAXABLE VALUE

Year	Building	Features	Land
2011	$ 0	$ 0	$ 156,900
		Parcel Total:	$ 156,900
2013	**$ 194,800**	**$ 5,000**	**$ 173,600**
		Parcel Total:	**$ 373,400**

LAND VALUATION

Zone: RURAL **Minimum Acreage:** 3.00 **Minimum Frontage:** 300 **Site:** AVERAGE **Driveway:** PAVED **Road:** PAVED

Land Type	Units	Base Rate	NC	Adj	Site	Road	DWay	Topography	Cond	Ad Valorem	SPI	R	Tax Value	Notes
1F RES	1.150 ac	140,600	H	130	100	100	100	95 -- MILD	100	173,600	0	N	173,600	
	1.150 ac									173,600			**173,600**	

PICTURE

OWNER

SHEIDOW MATTHEW
SHEIDOW MARGARET
69 HAWTHORNE DRIVE

AUBURN, NH 03032

TAXABLE DISTRICTS

District	Percentage

PERMITS

Date	Permit ID	Permit Type	Notes
08/02/12	12-332	NEW HOME	UNFINISHED BONUS ROO

BUILDING DETAILS

Model: **2.00 STORY FRAME COLONIAL**
Roof: **GABLE OR HIP/ASPHALT**
Ext: **VINYL SIDING**
Int: **DRYWALL**
Floor: **HARDWOOD**
Heat: **ELECTRIC/HEAT PUMP**
Bedrooms: **3** Baths: **2.5** Fixtures:
Extra Kitchens: Fireplaces:
A/C: **Yes 100.00 %** Generators:
Quality: **A2 AVG+20**
Com. Wall:
Size Adj: **0.9365** Base Rate: **RSA 60.00**
Bldg. Rate: **1.1234**
Sq. Foot Cost: **$ 67.40**

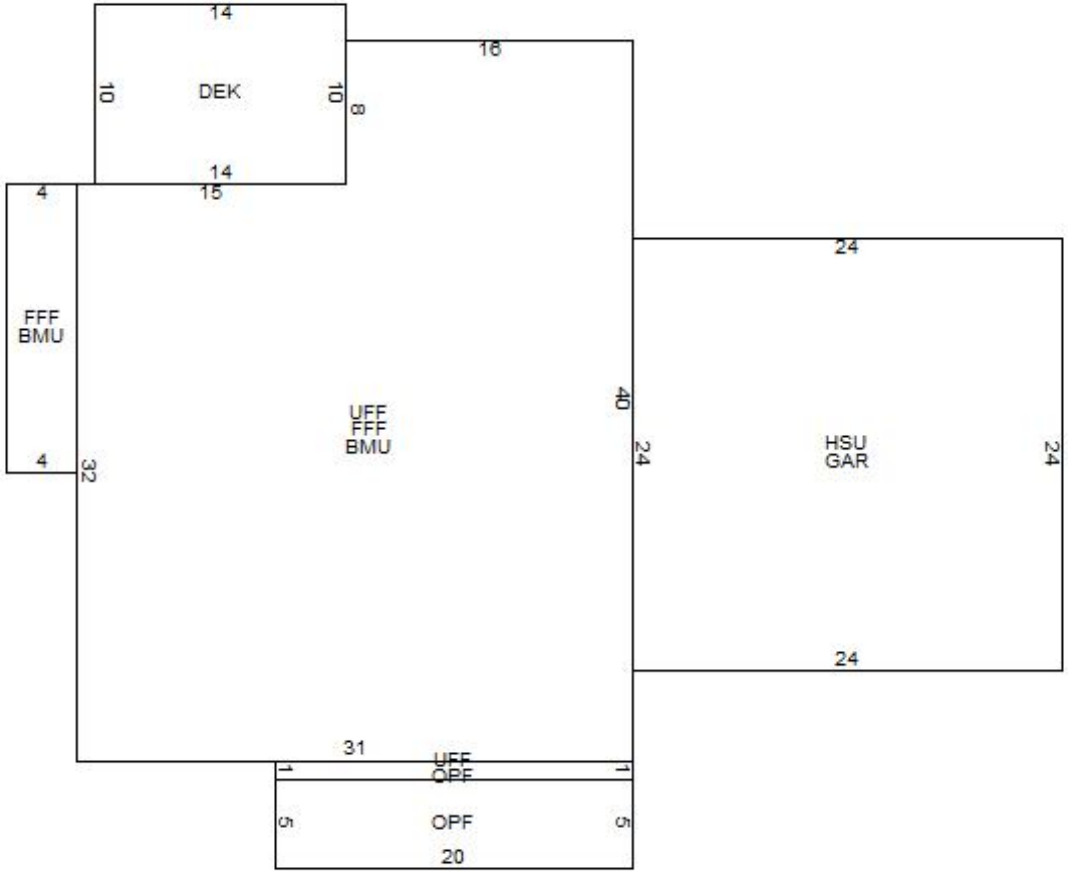

BUILDING SUB AREA DETAILS

ID	Description	Area	Adj.	Effect.
UFF	UPPER FLR FIN	1140	1.00	1140
FFF	FST FLR FIN	1184	1.00	1184
BMU	BSMNT	1184	0.15	178
OPF	OPEN PORCH	120	0.25	30
DEK	DECK/ENTRANCE	140	0.10	14
HSU	1/2 STRY UNFIN	576	0.25	144
GAR	GARAGE	576	0.45	259
GLA:	**2,324**	**4,920**		**2,949**

2013 BASE YEAR BUILDING VALUATION

Market Cost New:		**$ 198,763**
Year Built:		**2012**
Condition For Age:	AVERAGE	**2 %**
Physical:		
Functional:		
Economic:		
Temporary:		
Total Depreciation:		**2 %**
Building Value:		**$ 194,800**

OWNER INFORMATION

CHOUINARD JAMIE L

72 HAWTHORNE DRIVE

AUBURN, NH 03032

SALES HISTORY

Date	Book	Page	Type	Price	Grantor
08/13/2012	5345	1160	Q I	352,533	CHESTER HILL LLC

PICTURE

LISTING HISTORY

03/29/13 DMPM

NOTES

TAN; SUB-DIV D-36448; 3/13 P/U NEW HSE EST INT, EST HSE IS 100% COMPLETED/EST GEO THERMO SYS;

EXTRA FEATURES VALUATION

Feature Type	Units	Lngth x Width	Size Adj	Rate	Cond	Market Value	Notes
HAWTHORNE DR	1		100	5,000.00	100	5,000	
FIREPLACE 1-STAND	1		100	3,000.00	100	3,000	GAS
						8,000	

MUNICIPAL SOFTWARE BY AVITAR

AUBURN ASSESSING OFFICE

PARCEL TOTAL TAXABLE VALUE

Year	Building	Features	Land
2011	$ 0	$ 0	$ 156,800
		Parcel Total:	$ 156,800
2013	**$ 183,100**	**$ 8,000**	**$ 173,500**
		Parcel Total:	**$ 364,600**

LAND VALUATION

Zone: RURAL **Minimum Acreage:** 3.00 **Minimum Frontage:** 300 **Site:** AVERAGE **Driveway:** PAVED **Road:** PAVED

Land Type	Units	Base Rate	NC	Adj	Site	Road	DWay	Topography	Cond	Ad Valorem	SPI	R	Tax Value	Notes
1F RES	1.130 ac	140,520	H	130	100	100	100	95 -- MILD	100	173,500	0	N	173,500	
	1.130 ac									173,500			**173,500**	

PICTURE

OWNER

CHOUINARD JAMIE L

72 HAWTHORNE DRIVE

AUBURN, NH 03032

TAXABLE DISTRICTS

District	Percentage

PERMITS

Date	Permit ID	Permit Type	Notes
04/25/12	12-153	NEW HOME	SUBCONTRACTORS TO SE
04/25/12	12-152	NEW HOME	

BUILDING DETAILS

Model: **2.00 STORY FRAME COLONIAL**
Roof: **GABLE OR HIP/ASPHALT**
Ext: **VINYL SIDING**
Int: **DRYWALL**
Floor: **HARDWOOD/HARD TILE**
Heat: **ELECTRIC/HEAT PUMP**
Bedrooms: **3** Baths: **2.5** Fixtures:
Extra Kitchens: Fireplaces:
A/C: **Yes 100.00 %** Generators:
Quality: **A2 AVG+20**
Com. Wall:
Size Adj: **0.9541** Base Rate: **RSA 60.00**
Bldg. Rate: **1.1557**
Sq. Foot Cost: **$ 69.34**

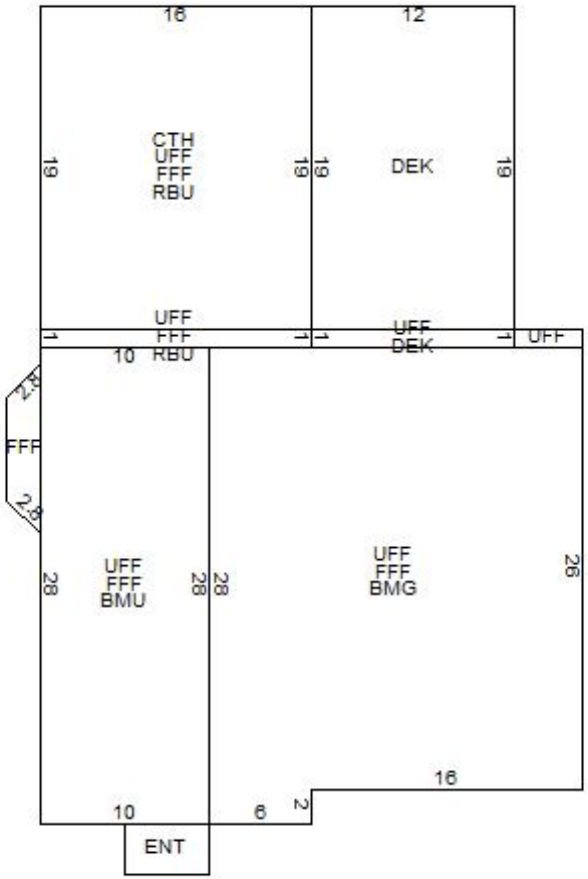

BUILDING SUB AREA DETAILS

ID	Description	Area	Adj.	Effect.
UFF	UPPER FLR FIN	1200	1.00	1200
FFF	FST FLR FIN	1200	1.00	1200
BMU	BSMNT	280	0.15	42
BMG	BASEMENT	584	0.20	117
ENT	ENTRANCE	15	0.10	2
RBU	RAISED BSMNT	320	0.25	80
DEK	DECK/ENTRANCE	240	0.10	24
CTH	CATHEDRAL	304	0.10	30
GLA:	**2,400**	**4,143**		**2,695**

2013 BASE YEAR BUILDING VALUATION

Market Cost New:		**$ 186,871**
Year Built:		**2012**
Condition For Age:	AVERAGE	**2 %**
Physical:		
Functional:		
Economic:		
Temporary:		
Total Depreciation:		**2 %**
Building Value:		**$ 183,100**

OWNER INFORMATION

MURPHY MARK B
MURPHY SHANNA G
70 HAWTHORNE DRIVE

AUBURN, NH 03032

SALES HISTORY

Date	Book	Page	Type	Price	Grantor
07/03/2012	5332	265	Q I	379,933	CHESTER HILL LLC

PICTURE

LISTING HISTORY

03/29/13 DMPM

NOTES

BLUE; SUB-DIV D-36448; 3/13 EST INT H/O (MRS) REFUSED INT INSPECT/EST GEO THERMO SYS;

EXTRA FEATURES VALUATION

Feature Type	Units	Lngth x Width	Size Adj	Rate	Cond	Market Value	Notes
HAWTHORNE DR	1		100	5,000.00	100	5,000	
FIREPLACE 1-STAND	1		100	3,000.00	100	3,000	
						8,000	

MUNICIPAL SOFTWARE BY AVITAR

AUBURN ASSESSING OFFICE

PARCEL TOTAL TAXABLE VALUE

Year	Building	Features	Land
2011	$ 0	$ 0	$ 156,100
		Parcel Total:	$ 156,100
2013	**$ 188,500**	**$ 8,000**	**$ 173,000**
		Parcel Total:	**$ 369,500**

LAND VALUATION

Zone: RURAL **Minimum Acreage:** 3.00 **Minimum Frontage:** 300 **Site:** AVERAGE **Driveway:** PAVED **Road:** PAVED

Land Type	Units	Base Rate	NC	Adj	Site	Road	DWay	Topography	Cond	Ad Valorem	SPI	R	Tax Value	Notes
1F RES	1.020 ac	140,080	H	130	100	100	100	95 -- MILD	100	173,000	0	N	173,000	
	1.020 ac									173,000			**173,000**	

PICTURE

OWNER

MURPHY MARK B
MURPHY SHANNA G
70 HAWTHORNE DRIVE

AUBURN, NH 03032

TAXABLE DISTRICTS

District	Percentage

PERMITS

Date	Permit ID	Permit Type	Notes
03/28/12	12-106	NEW HOME	UNFINISHED BASEMENT,

BUILDING DETAILS

Model: **2.00 STORY FRAME COLONIAL**
Roof: **GABLE OR HIP/ASPHALT**
Ext: **VINYL SIDING**
Int: **DRYWALL**
Floor: **HARDWOOD/HARD TILE**
Heat: **ELECTRIC/HEAT PUMP**
Bedrooms: **4** Baths: **2.5** Fixtures:
Extra Kitchens: Fireplaces:
A/C: **Yes 100.00 %** Generators:
Quality: **A2 AVG+20**
Com. Wall:
Size Adj: **0.9491** Base Rate: **RSA 60.00**
Bldg. Rate: **1.1608**
Sq. Foot Cost: **$ 69.65**

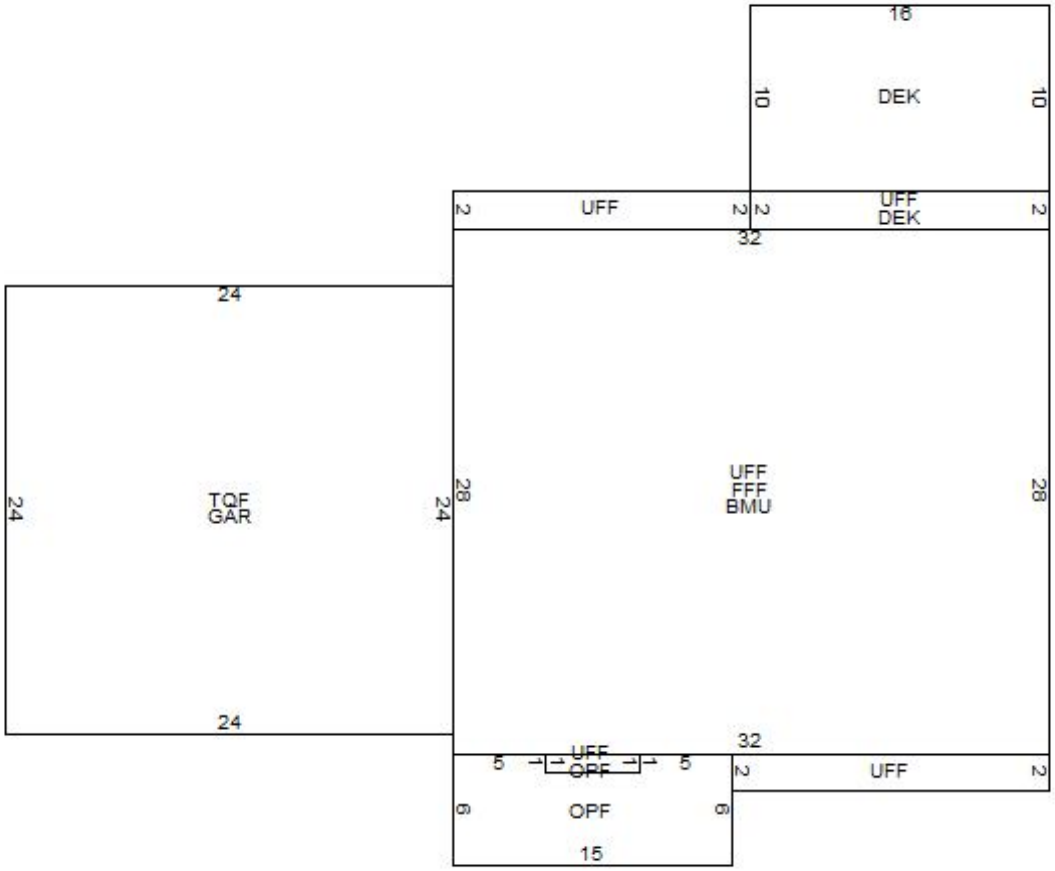

BUILDING SUB AREA DETAILS

ID	Description	Area	Adj.	Effect.
TQF	3/4 STRY FIN	576	0.75	432
GAR	GARAGE	576	0.45	259
UFF	UPPER FLR FIN	999	1.00	999
FFF	FST FLR FIN	896	1.00	896
BMU	BSMNT	896	0.15	134
DEK	DECK/ENTRANCE	192	0.10	19
OPF	OPEN PORCH	90	0.25	23
GLA:	**2,327**	**4,225**		**2,762**

2013 BASE YEAR BUILDING VALUATION

Market Cost New:		**$ 192,373**
Year Built:		**2012**
Condition For Age:	AVERAGE	**2 %**
Physical:		
Functional:		
Economic:		
Temporary:		
Total Depreciation:		**2 %**
Building Value:		**$ 188,500**

OWNER INFORMATION

FOLIA ERIC K
FOLIA CAITLYN M
68 HAWTHORNE DRIVE

AUBURN, NH 03032

SALES HISTORY

Date	Book	Page	Type	Price	Grantor
08/06/2012	5342	2933	Q I	437,733	CHESTER HILL LLC

PICTURE

LISTING HISTORY

03/15/13 CRVM

NOTES

SUB-DIV D-36448;

EXTRA FEATURES VALUATION

Feature Type	Units	Lngth x Width	Size Adj	Rate	Cond	Market Value	Notes
FIREPLACE 1-STAND	1		100	3,000.00	100	3,000	GAS
HAWTHORNE DR	1		100	5,000.00	100	5,000	
						8,000	

MUNICIPAL SOFTWARE BY AVITAR

AUBURN ASSESSING OFFICE

PARCEL TOTAL TAXABLE VALUE

Year	Building	Features	Land
2011	$ 0	$ 0	$ 154,800
		Parcel Total:	$ 154,800
2013	**$ 220,100**	**$ 8,000**	**$ 168,000**
		Parcel Total:	**$ 396,100**

LAND VALUATION

Zone: RURAL **Minimum Acreage:** 3.00 **Minimum Frontage:** 300 **Site:** AVERAGE **Driveway:** PAVED **Road:** PAVED

Land Type	Units	Base Rate	NC	Adj	Site	Road	DWay	Topography	Cond	Ad Valorem	SPI	R	Tax Value	Notes
1F RES	0.900 ac	136,000	H	130	100	100	100	95 -- MILD	100	168,000	0	N	168,000	
	0.900 ac									168,000			**168,000**	

PICTURE

OWNER

FOLIA ERIC K
FOLIA CAITLYN M
68 HAWTHORNE DRIVE

AUBURN, NH 03032

TAXABLE DISTRICTS

District	Percentage

PERMITS

Date	Permit ID	Permit Type	Notes
04/12/12	12-133	NEW HOME	SUBCONTRACTORS TO SE

BUILDING DETAILS

Model: **2.00 STORY FRAME CONTEMP**
Roof: **GABLE OR HIP/ASPHALT**
Ext: **VINYL SIDING**
Int: **DRYWALL**
Floor: **HARDWOOD**
Heat: **ELECTRIC/HEAT PUMP**
Bedrooms: **4** Baths: **2.5** Fixtures: **10**
Extra Kitchens: Fireplaces: **1**
A/C: **Yes 100.00 %** Generators:
Quality: **A3 AVG+30**
Com. Wall:
Size Adj: **0.9313** Base Rate: **RSA 60.00**
Bldg. Rate: **1.2339**
Sq. Foot Cost: **$ 74.04**

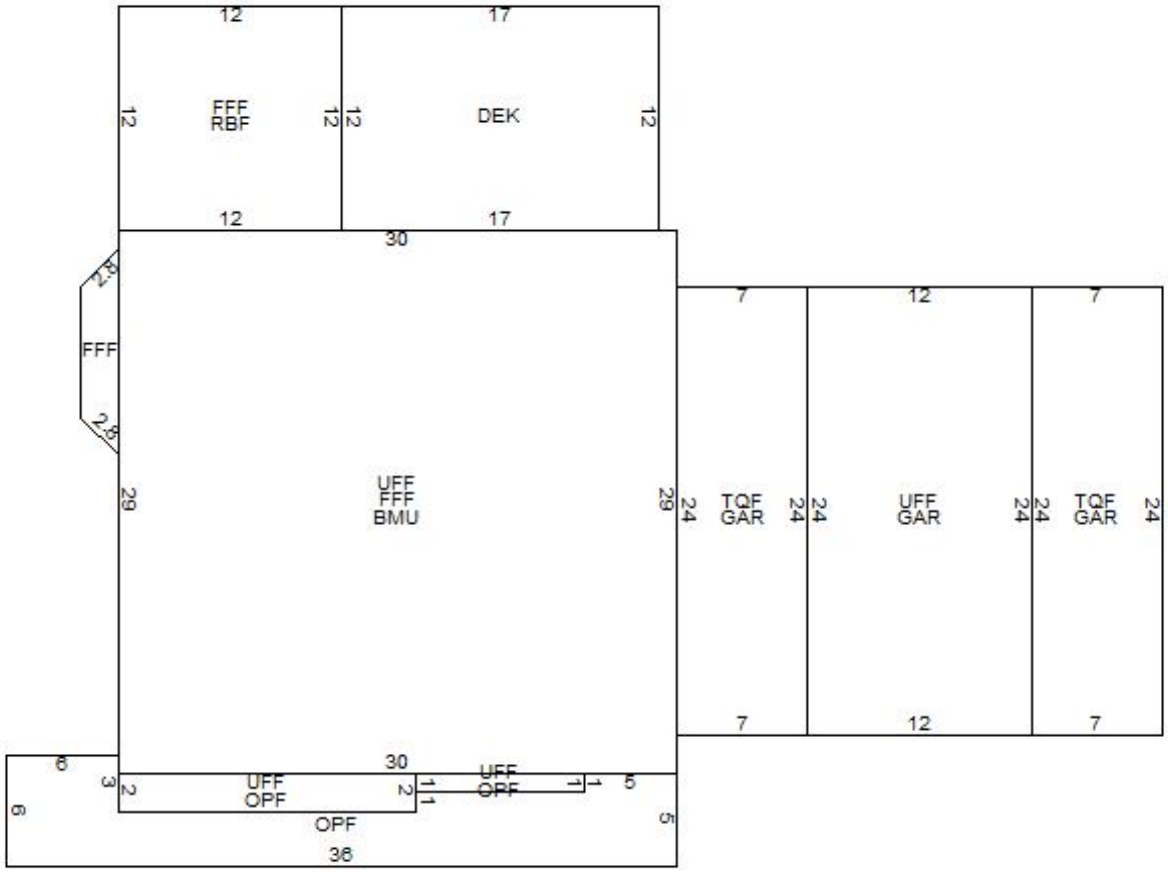

BUILDING SUB AREA DETAILS

ID	Description	Area	Adj.	Effect.
UFF	UPPER FLR FIN	1199	1.00	1199
FFF	FST FLR FIN	1032	1.00	1032
BMU	BSMNT	870	0.15	131
OPF	OPEN PORCH	186	0.25	47
TQF	3/4 STRY FIN	336	0.75	252
GAR	GARAGE	624	0.45	281
RBF	RAISED BSMNT	144	0.50	72
DEK	DECK/ENTRANCE	204	0.10	20
GLA:	**2,483**	**4,595**		**3,034**

2013 BASE YEAR BUILDING VALUATION

Market Cost New:		**$ 224,637**
Year Built:		**2012**
Condition For Age:	AVERAGE	**2 %**
Physical:		
Functional:		
Economic:		
Temporary:		
Total Depreciation:		**2 %**
Building Value:		**$ 220,100**

OWNER INFORMATION

AMATO THOMAS J
AMATO MELISSA J
64 HAWTHORNE DRIVE

AUBURN, NH 03032

SALES HISTORY

Date	Book	Page	Type	Price	Grantor
01/28/2013	5403	281	Q I	487,800	CHESTER HILL LLC

PICTURE

LISTING HISTORY

04/01/13 DMPM

NOTES

TAN; SUB-DIV D-36448; 4/13 P/U NEW HSE EST INT & EST HSE IS 100% COMPLETED/GEO THERMO;

EXTRA FEATURES VALUATION

Feature Type	Units	Lngth x Width	Size Adj	Rate	Cond	Market Value	Notes
HAWTHORNE DR	1		100	5,000.00	100	5,000	
FIREPLACE 1-STAND	1		100	3,000.00	100	3,000	
						8,000	

MUNICIPAL SOFTWARE BY AVITAR

AUBURN ASSESSING OFFICE

PARCEL TOTAL TAXABLE VALUE

Year	Building	Features	Land
2011	$ 0	$ 0	$ 154,900
		Parcel Total:	$ 154,900
2013	**$ 241,900**	**$ 8,000**	**$ 168,500**
		Parcel Total:	**$ 418,400**

LAND VALUATION

Zone: RURAL **Minimum Acreage:** 3.00 **Minimum Frontage:** 300 **Site:** AVERAGE **Driveway:** PAVED **Road:** PAVED

Land Type	Units	Base Rate	NC	Adj	Site	Road	DWay	Topography	Cond	Ad Valorem	SPI	R	Tax Value	Notes
1F RES	0.910 ac	136,400	H	130	100	100	100	95 -- MILD	100	168,500	0	N	168,500	
	0.910 ac									168,500			**168,500**	

PICTURE

OWNER

AMATO THOMAS J
AMATO MELISSA J
64 HAWTHORNE DRIVE

AUBURN, NH 03032

TAXABLE DISTRICTS

District	Percentage

PERMITS

Date	Permit ID	Permit Type	Notes
12/10/12	12-588	NEW HOME	
04/10/12	12-130	NEW HOME	UNFINISHED BASEMENT,

BUILDING DETAILS

Model: **2.00 STORY FRAME COLONIAL**
Roof: **GABLE OR HIP/ASPHALT**
Ext: **VINYL SIDING**
Int: **DRYWALL**
Floor: **HARDWOOD/CARPET**
Heat: **ELECTRIC/HEAT PUMP**
Bedrooms: **4** Baths: **2.5** Fixtures:
Extra Kitchens: Fireplaces:
A/C: **Yes 100.00 %** Generators:
Quality: **A3 AVG+30**
Com. Wall:
Size Adj: **0.9096** Base Rate: **RSA 60.00**
Bldg. Rate: **1.1936**
Sq. Foot Cost: **$ 71.62**

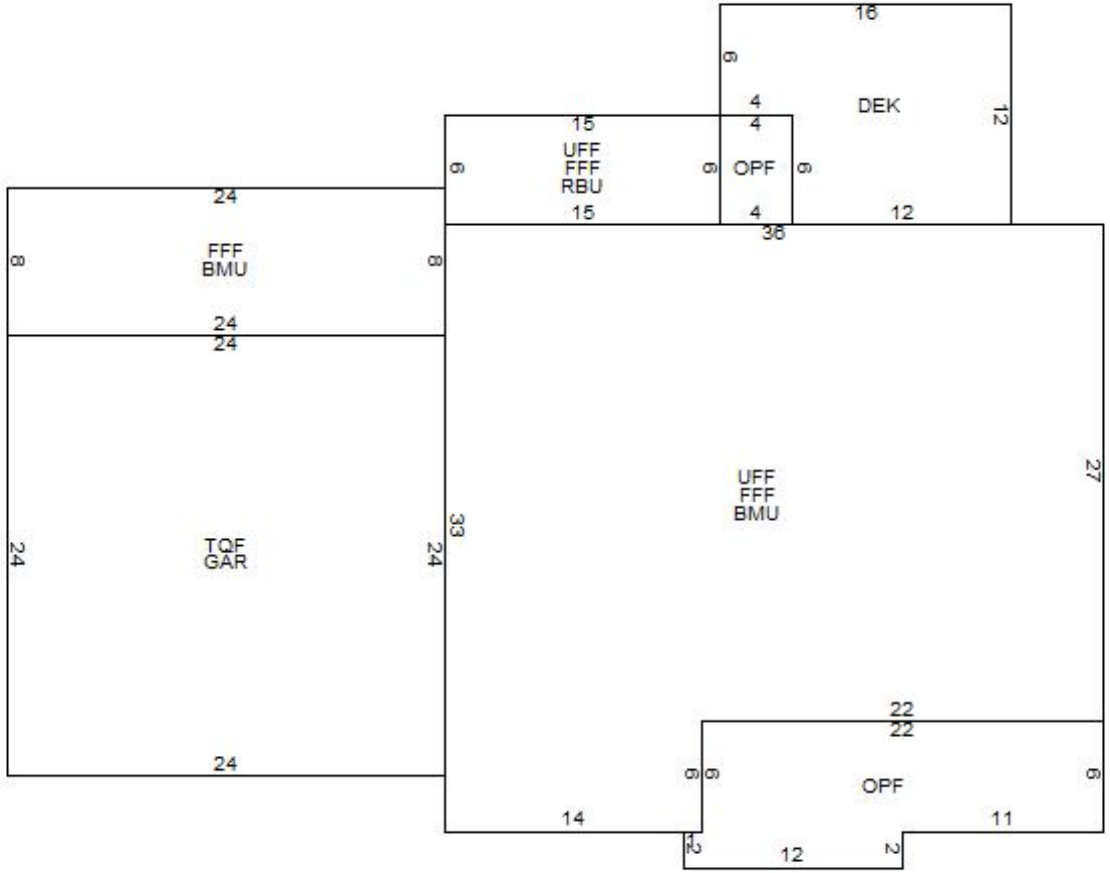

BUILDING SUB AREA DETAILS

ID	Description	Area	Adj.	Effect.
GAR	GARAGE	576	0.45	259
DEK	DECK/ENTRANCE	168	0.10	17
FFF	FST FLR FIN	1338	1.00	1338
BMU	BSMNT	1248	0.15	187
UFF	UPPER FLR FIN	1146	1.00	1146
RBU	RAISED BSMNT	90	0.25	23
TQF	3/4 STRY FIN	576	0.75	432
OPF	OPEN PORCH	180	0.25	45
GLA:	**2,916**	**5,322**		**3,447**

2013 BASE YEAR BUILDING VALUATION

Market Cost New:		**$ 246,874**
Year Built:		**2012**
Condition For Age:	AVERAGE	**2 %**
Physical:		
Functional:		
Economic:		
Temporary:		
Total Depreciation:		**2 %**
Building Value:		**$ 241,900**

OWNER INFORMATION

MUNROE MICHAEL J
MUNROE KRYSTAL
62 HAWTHORNE DRIVE

AUBURN, NH 03032

SALES HISTORY

Date	Book	Page	Type	Price	Grantor
04/02/2012	5302	2041	Q I	379,533	CHESTER HILL LLC

PICTURE

LISTING HISTORY

03/29/13 DMPR
03/22/12 DMPL

NOTES

BLUE;SUB-DIV D-36448;3/13 HSE IS 100% COMPLETED P/U BMF=NO HEAT, P/U DEK & ENT, REMOVE UC & FLAG;

EXTRA FEATURES VALUATION

Feature Type	Units	Lngth x Width	Size Adj	Rate	Cond	Market Value	Notes
HAWTHORNE DR	1		100	5,000.00	100	5,000	
FIREPLACE 1-STAND	1		100	3,000.00	100	3,000	
						8,000	

MUNICIPAL SOFTWARE BY AVITAR

AUBURN ASSESSING OFFICE

PARCEL TOTAL TAXABLE VALUE

Year	Building	Features	Land
2011	$ 0	$ 0	$ 154,900
		Parcel Total:	$ 154,900
2013	**$ 184,200**	**$ 8,000**	**$ 168,500**
		Parcel Total:	**$ 360,700**

LAND VALUATION

Zone: RURAL **Minimum Acreage:** 3.00 **Minimum Frontage:** 300 **Site:** AVERAGE **Driveway:** PAVED **Road:** PAVED

Land Type	Units	Base Rate	NC	Adj	Site	Road	DWay	Topography	Cond	Ad Valorem	SPI	R	Tax Value	Notes
1F RES	0.910 ac	136,400	H	130	100	100	100	95 -- MILD	100	168,500	0	N	168,500	
	0.910 ac									168,500			**168,500**	

PICTURE

OWNER

MUNROE MICHAEL J
MUNROE KRYSTAL
62 HAWTHORNE DRIVE

AUBURN, NH 03032

TAXABLE DISTRICTS

District	Percentage

PERMITS

Date	Permit ID	Permit Type	Notes
03/28/13	13-158	SHED	DEVELOPER OKAYED EX(
11/21/11	11-398	NEW HOME	FINISHED MUD ROOM. SU

BUILDING DETAILS

Model: **2.00 STORY FRAME COLONIAL**
Roof: **GABLE OR HIP/ASPHALT**
Ext: **VINYL SIDING**
Int: **DRYWALL**
Floor: **HARDWOOD/CARPET**
Heat: **ELECTRIC/HEAT PUMP**
Bedrooms: **4** Baths: **2.5** Fixtures: **10**
Extra Kitchens: Fireplaces:
A/C: **Yes 100.00 %** Generators:
Quality: **A2 AVG+20**
Com. Wall:
Size Adj: **0.9551** Base Rate: **RSA 60.00**
Bldg. Rate: **1.1681**
Sq. Foot Cost: **$ 70.09**

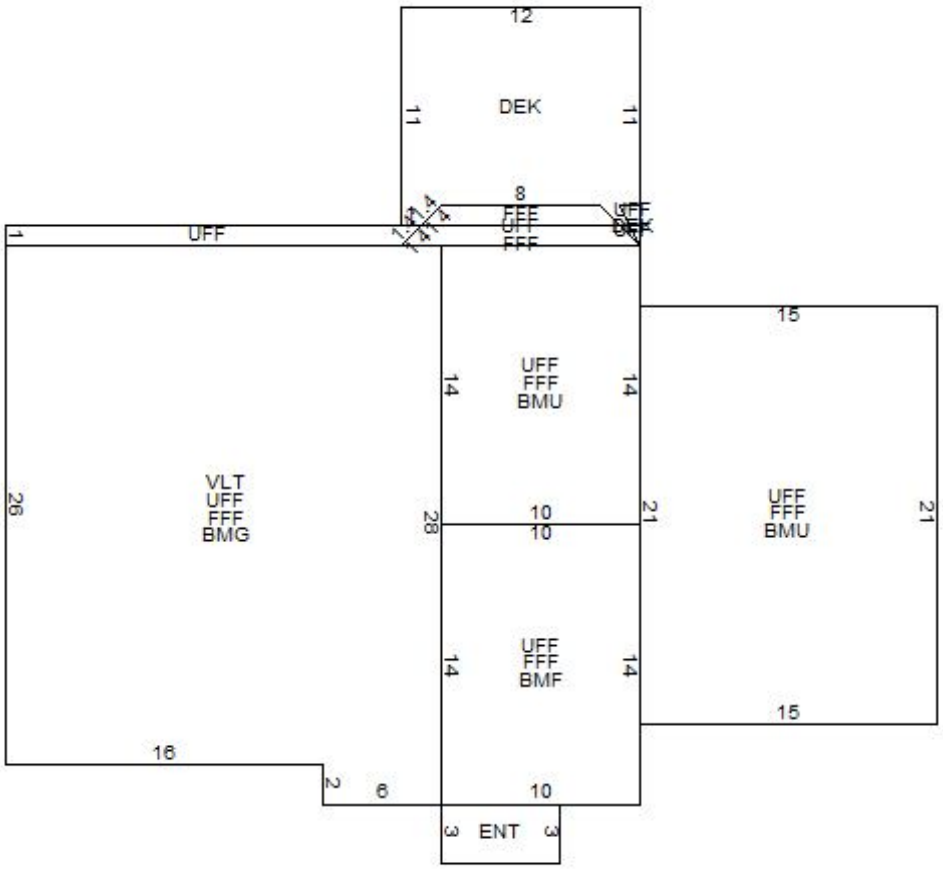

BUILDING SUB AREA DETAILS

ID	Description	Area	Adj.	Effect.
VLT	VAULTED	584	0.05	29
UFF	UPPER FLR FIN	1212	1.00	1212
FFF	FST FLR FIN	1199	1.00	1199
BMG	BASEMENT	584	0.20	117
BMU	BSMNT	455	0.15	68
BMF	BSMNT FINISHED	140	0.30	42
DEK	DECK/ENTRANCE	124	0.10	12
ENT	ENTRANCE	18	0.10	2
GLA:	**2,411**	**4,316**		**2,681**

2013 BASE YEAR BUILDING VALUATION

Market Cost New:		**$ 187,911**
Year Built:		**2012**
Condition For Age:	AVERAGE	**2 %**
Physical:		
Functional:		
Economic:		
Temporary:		
Total Depreciation:		**2 %**
Building Value:		**$ 184,200**

OWNER INFORMATION

SHANK MARY J
SHANK CHRISTOPHER D
24 HAWTHORNE DRIVE

AUBURN, NH 03032

SALES HISTORY

Date	Book	Page	Type	Price	Grantor
04/27/2012	5310	2325	Q I	347,800	CHESTER HILL LLC

PICTURE

LISTING HISTORY

04/01/13 DMPR
03/15/13 CRVM
03/23/12 DMPL
04/22/11 DMPL

NOTES

GREEN;SUB-DIV D-36448; 3/12 P/U NEW HSE/GEO THERMO HEAT, TRAY CEILING IN MASTER BDRM,4/13 REMOVE FLAG; 3/13 ADDED BMG;

EXTRA FEATURES VALUATION

Feature Type	Units	Lngth x Width	Size Adj	Rate	Cond	Market Value	Notes
HAWTHORNE DR	1		100	5,000.00	100	5,000	
FIREPLACE 1-STAND	1		100	3,000.00	100	3,000	GAS
						8,000	

MUNICIPAL SOFTWARE BY AVITAR

AUBURN ASSESSING OFFICE

PARCEL TOTAL TAXABLE VALUE

Year	Building	Features	Land
2011	$ 0	$ 0	$ 149,100
		Parcel Total:	$ 149,100
2013	**$ 164,700**	**$ 8,000**	**$ 173,600**
		Parcel Total:	**$ 346,300**

LAND VALUATION

Zone: RURAL **Minimum Acreage:** 3.00 **Minimum Frontage:** 300 **Site:** AVERAGE **Driveway:** PAVED **Road:** PAVED

Land Type	Units	Base Rate	NC	Adj	Site	Road	DWay	Topography	Cond	Ad Valorem	SPI	R	Tax Value	Notes
1F RES	1.150 ac	140,600	H	130	100	100	100	95 -- MILD	100	173,600	0	N	173,600	
	1.150 ac									173,600			**173,600**	

PICTURE

OWNER

SHANK MARY J
SHANK CHRISTOPHER D
24 HAWTHORNE DRIVE

AUBURN, NH 03032

TAXABLE DISTRICTS

District	Percentage

PERMITS

Date	Permit ID	Permit Type	Notes
03/08/11	11-062	NEW HOME	UNFINISHED BASEMENT

BUILDING DETAILS

Model: **2.00 STORY FRAME COLONIAL**
Roof: **GABLE OR HIP/ASPHALT**
Ext: **VINYL SIDING**
Int: **DRYWALL**
Floor: **HARDWOOD/CARPET**
Heat: **ELECTRIC/HEAT PUMP**
Bedrooms: **3** Baths: **2.5** Fixtures: **8**
Extra Kitchens: Fireplaces:
A/C: **Yes 100.00 %** Generators:
Quality: **A2 AVG+20**
Com. Wall:
Size Adj: **0.9810** Base Rate: **RSA 60.00**
Bldg. Rate: **1.1767**
Sq. Foot Cost: **$ 70.60**

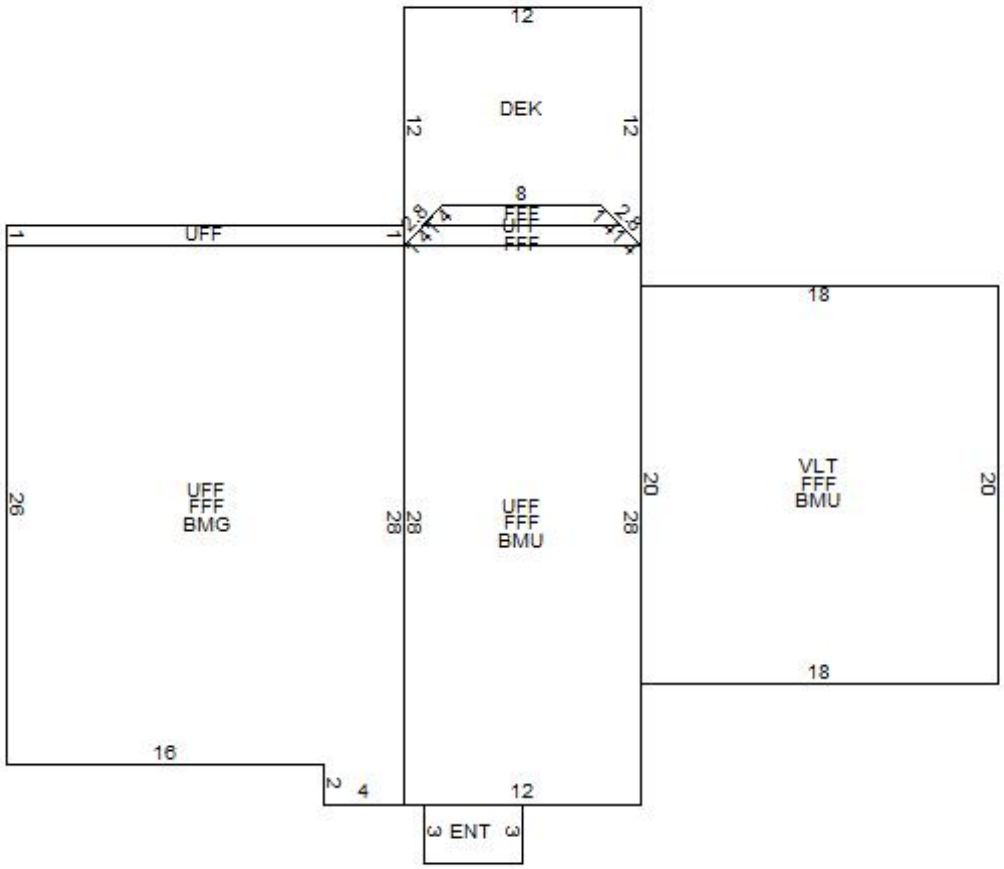

BUILDING SUB AREA DETAILS

ID	Description	Area	Adj.	Effect.
ENT	ENTRANCE	15	0.10	2
VLT	VAULTED	360	0.05	18
FFF	FST FLR FIN	1244	1.00	1244
BMU	BSMNT	696	0.15	104
UFF	UPPER FLR FIN	895	1.00	895
DEK	DECK/ENTRANCE	124	0.10	12
BMG	BASEMENT	528	0.20	106
GLA:	**2,139**	**3,862**		**2,381**

2013 BASE YEAR BUILDING VALUATION

Market Cost New:		**$ 168,099**
Year Built:		**2012**
Condition For Age:	AVERAGE	**2 %**
Physical:		
Functional:		
Economic:		
Temporary:		
Total Depreciation:		**2 %**
Building Value:		**$ 164,700**

OWNER INFORMATION

CANFIELD RICHARD E
CANFIELD MARCELLA M
22 HAWTHORNE DRIVE

AUBURN, NH 03032

SALES HISTORY

Date	Book	Page	Type	Price	Grantor
05/22/2012	5318	991	Q I	398,000	CHESTER HILL LLC

PICTURE

LISTING HISTORY

04/01/13 DMPL
03/23/12 DMPE
04/22/11 DMPM

NOTES

CRM; SUB-DIV D-36448;4/13 HSE IS 100% COMPLETED, TQU=OPEN STUDS W/ROUGH WIRING & DUCT WORK, HEAT IS NOT HOOKED UP REMOVE FLAG;

EXTRA FEATURES VALUATION

Feature Type	Units	Lngth x Width	Size Adj	Rate	Cond	Market Value	Notes
FIREPLACE 1-STAND	1		100	3,000.00	100	3,000	
HAWTHORNE DR	1		100	5,000.00	100	5,000	
						8,000	

MUNICIPAL SOFTWARE BY AVITAR

AUBURN ASSESSING OFFICE

PARCEL TOTAL TAXABLE VALUE

Year	Building	Features	Land
2011	$ 103,200	$ 8,000	$ 147,700
		Parcel Total:	$ 258,900
2013	**$ 196,100**	**$ 8,000**	**$ 179,900**
		Parcel Total:	**$ 384,000**

LAND VALUATION

Zone: RURAL **Minimum Acreage:** 3.00 **Minimum Frontage:** 300 **Site:** AVERAGE **Driveway:** PAVED **Road:** PAVED

Land Type	Units	Base Rate	NC	Adj	Site	Road	DWay	Topography	Cond	Ad Valorem	SPI	R	Tax Value	Notes
1F RES	0.960 ac	138,400	H	130	100	100	100	100 -- LEVEL	100	179,900	0	N	179,900	
	0.960 ac									179,900			**179,900**	

PICTURE

OWNER

CANFIELD RICHARD E
CANFIELD MARCELLA M
22 HAWTHORNE DRIVE

AUBURN, NH 03032

TAXABLE DISTRICTS

District	Percentage

PERMITS

Date	Permit ID	Permit Type	Notes
11/09/10	10-328	NEW HOME	UNFINISHED BONUS ROO

BUILDING DETAILS

Model: **2.00 STORY FRAME COLONIAL**
Roof: **GABLE OR HIP/ASPHALT**
Ext: **VINYL SIDING**
Int: **DRYWALL**
Floor: **CARPET/HARDWOOD**
Heat: **ELECTRIC/HEAT PUMP**
Bedrooms: **3** Baths: **2.5** Fixtures: **11**
Extra Kitchens: Fireplaces:
A/C: **Yes 100.00 %** Generators:
Quality: **A2 AVG+20**
Com. Wall:
Size Adj: **0.9302** Base Rate: **RSA 60.00**
Bldg. Rate: **1.1267**
Sq. Foot Cost: **$ 67.60**

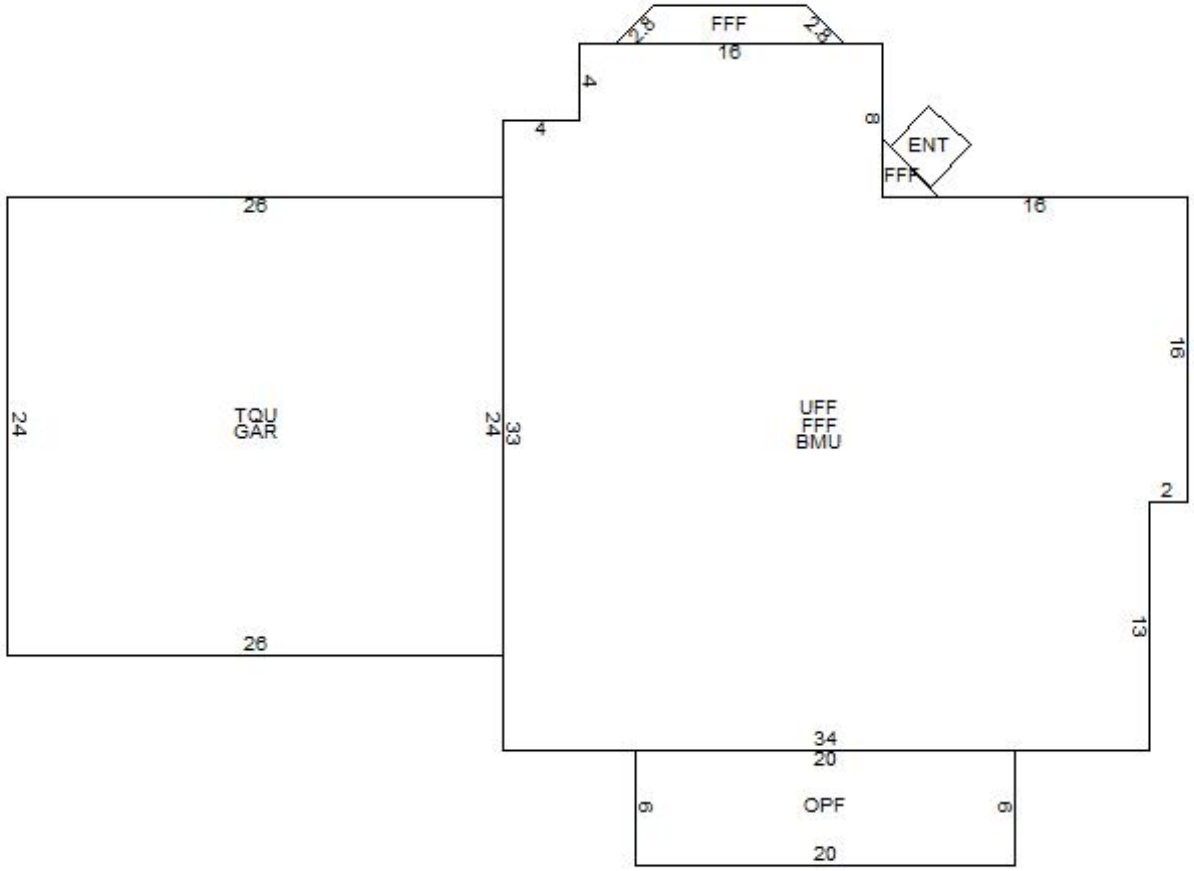

BUILDING SUB AREA DETAILS

ID	Description	Area	Adj.	Effect.
GAR	GARAGE	624	0.45	281
UFF	UPPER FLR FIN	1162	1.00	1162
FFF	FST FLR FIN	1187	1.00	1187
BMU	BSMNT	1162	0.15	174
TQU	3/4 STRY UNFIN	624	0.35	218
OPF	OPEN PORCH	120	0.25	30
ENT	ENTRANCE	9	0.10	1
GLA:	**2,349**	**4,888**		**3,053**

2013 BASE YEAR BUILDING VALUATION

Market Cost New:		**$ 206,383**
Year Built:		**2010**
Condition For Age:	AVERAGE	**5 %**
Physical:		
Functional:		
Economic:		
Temporary:		
Total Depreciation:		**5 %**
Building Value:		**$ 196,100**

OWNER INFORMATION

MAMULASHVILI EKATERINA

56 MAVERICK DRIVE

AUBURN, NH 03032

SALES HISTORY

Date	Book	Page	Type	Price	Grantor
05/25/2012	5319	1818	Q I	440,000	COCHRAN III,
06/22/2001	3601	1995	U I 82		COCHRAN
05/29/2001	3588	1416	U I 82		COCHRAN
02/07/2001	3542	0097	Q I	100,000	MAVERICK

PICTURE

LISTING HISTORY

04/01/13	DMPR
03/18/13	CRVR
04/22/11	DMPE
03/24/10	DMVM
07/01/05	DIUM
05/05/03	LTRL
12/19/02	JDRM

NOTES

WHITE; WATER REAR OF HOME (NICE); BMU=WALK OUT; FPL=GAS; 3/10 NOH; EST WORK HAS BEEN DONE; MILD SLOPE OF TOPO TO WTR;4/11 TALK TO H/O AT DOOR, NO INFO DNVI(PEOPLE SICK} EST BMF;4/13 NOH P/U GEN;3/13 NOH-NC;

EXTRA FEATURES VALUATION

Feature Type	Units	Lngth x Width	Size Adj	Rate	Cond	Market Value	Notes
FIREPLACE 1-STAND	2		100	3,000.00	100	6,000	
						6,000	

MUNICIPAL SOFTWARE BY AVITAR

AUBURN ASSESSING OFFICE

PARCEL TOTAL TAXABLE VALUE

Year	Building	Features	Land
2011	$ 195,400	$ 6,000	$ 190,100
		Parcel Total:	$ 391,500
2013	**$ 182,500**	**$ 6,000**	**$ 214,300**
		Parcel Total:	**$ 402,800**

LAND VALUATION

Zone: RESIDENTIAL 1 & 2 **Minimum Acreage:** 2.00 **Minimum Frontage:** 200 **Site:** GOOD **Driveway:** PAVED **Road:** PAVED

Land Type	Units	Base Rate	NC	Adj	Site	Road	DWay	Topography	Cond	Ad Valorem	SPI	R	Tax Value	Notes
1F RES WTRFRNT	2.000 ac	144,000	H	130	103	100	100	95 -- MILD	100	183,200	0	N	183,200	
1F RES WTRFRNT	1.734 ac	x 3,500	X	100					100	6,100	0	N	6,100	
1F RES WTRFRNT	1.000 wf	x 100,000	X	100					25	25,000	0	N	25,000	WF BEAVER POND
	3.734 ac									214,300			**214,300**	

PICTURE

OWNER

MAMULASHVILI EKATERINA

56 MAVERICK DRIVE

AUBURN, NH 03032

TAXABLE DISTRICTS

District	Percentage

PERMITS

Date	Permit ID	Permit Type	Notes
09/28/10	10-281	RENOVATION	NOT TO BE USED AS BEDI

BUILDING DETAILS

Model: **2.00 STORY FRAME COLONIAL**
Roof: **GABLE OR HIP/ASPHALT**
Ext: **VINYL SIDING**
Int: **DRYWALL**
Floor: **CARPET/HARDWOOD**
Heat: **GAS/FA DUCTED**
Bedrooms: **3** Baths: **3.0** Fixtures:
Extra Kitchens: Fireplaces:
A/C: **Yes 100.00 %** Generators: **1**
Quality: **A2 AVG+20**
Com. Wall:
Size Adj: **0.9359** Base Rate: **RSA 60.00**
Bldg. Rate: **1.1556**
Sq. Foot Cost: **$ 69.34**

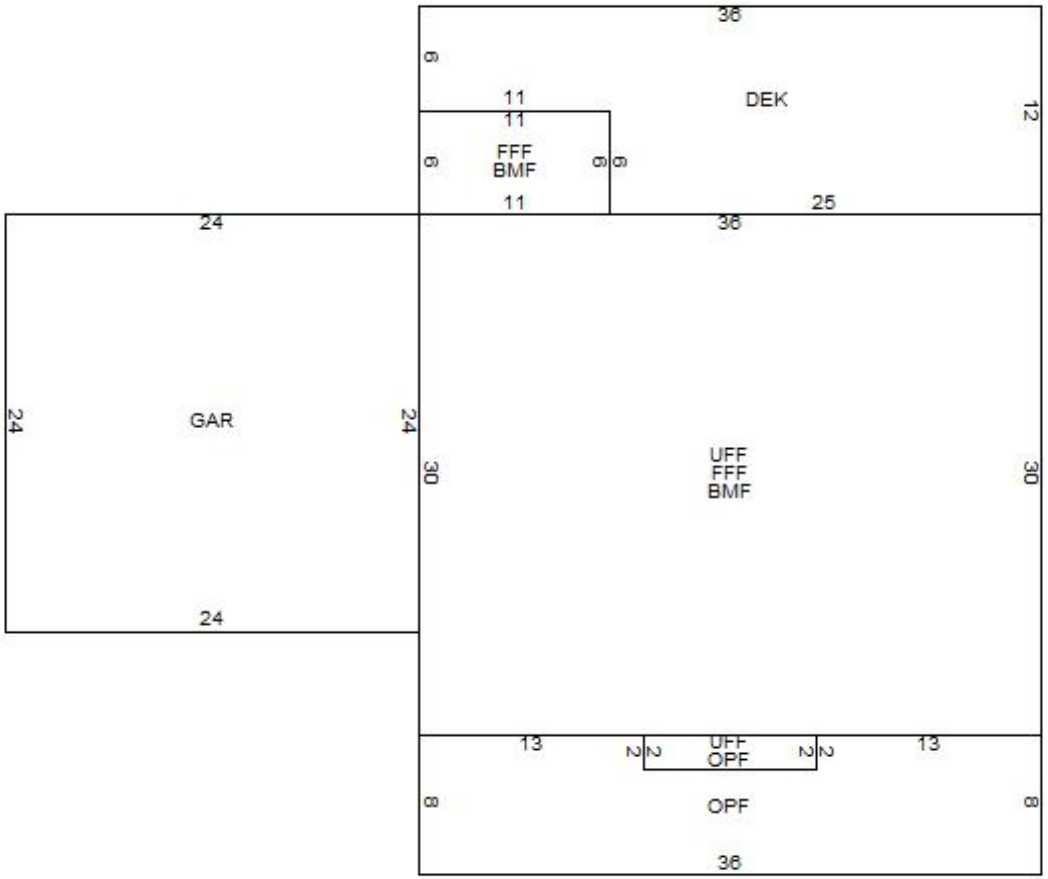

BUILDING SUB AREA DETAILS

ID	Description	Area	Adj.	Effect.
DEK	DECK/ENTRANCE	366	0.10	37
UFF	UPPER FLR FIN	1100	1.00	1100
FFF	FST FLR FIN	1146	1.00	1146
BMF	BSMNT FINISHED	1146	0.30	344
OPF	OPEN PORCH	288	0.25	72
GAR	GARAGE	576	0.45	259
GLA:	**2,246**	**4,622**		**2,958**

2013 BASE YEAR BUILDING VALUATION

Market Cost New:		**$ 205,108**
Year Built:		**2001**
Condition For Age:	GOOD	**11 %**
Physical:		
Functional:		
Economic:		
Temporary:		
Total Depreciation:		**11 %**
Building Value:		**$ 182,500**

OWNER INFORMATION

FREY BRAD

755 CHESTER ROAD

AUBURN, NH 03032

SALES HISTORY

Date	Book	Page	Type	Price	Grantor
03/23/2012	5299	1475	Q I	204,000	WOLPER BARRY
07/28/2011	5232	2252	U I 49	90,000	SUTTON, ROBERT E

PICTURE

LISTING HISTORY

03/18/13	CRVR	
03/26/12	DMPR	
12/02/11	DMVM	DV SALES
06/22/09	DMVL	
03/04/09	INSP	MARKED FOR INSPECTION
04/29/08	KCVL	
04/14/08	INSP	MARKED FOR INSPECTION
12/16/02	JDRL	

NOTES

TAN; LOW BSMT WET/SUMP PUMP;12/11\NOH NEW SIDING, WINDOWS, DOOR & EST INT HAS BEEN REDONE=GOOD CONDITION;3/12 NOH N/C;3/13 NOH-NC;

EXTRA FEATURES VALUATION

Feature Type	Units	Lngth x Width	Size Adj	Rate	Cond	Market Value	Notes
GARAGE-1 STY	576	24 x 24	88	22.00	50	5,576	
						5,600	

MUNICIPAL SOFTWARE BY AVITAR

AUBURN ASSESSING OFFICE

PARCEL TOTAL TAXABLE VALUE

Year	Building	Features	Land
2011	$ 82,300	$ 6,400	$ 129,800
		Parcel Total:	$ 218,500
2013	**$ 75,100**	**$ 5,600**	**$ 142,400**
		Parcel Total:	**$ 223,100**

LAND VALUATION

Zone: RESIDENTIAL 1 & 2 **Minimum Acreage:** 2.00 **Minimum Frontage:** 200 **Site:** AVERAGE **Driveway:** GRAVEL **Road:** PAVED

Land Type	Units	Base Rate	NC	Adj	Site	Road	DWay	Topography	Cond	Ad Valorem	SPI	R	Tax Value	Notes
1F RES	2.000 ac	144,000	E	100	100	100	97	100 -- LEVEL	100	139,700	0	N	139,700	
1F RES	0.800 ac	x 3,500	X	100				95 -- MILD	100	2,700	0	N	2,700	
	2.800 ac									142,400			**142,400**	

PICTURE

OWNER

FREY BRAD

755 CHESTER ROAD

AUBURN, NH 03032

TAXABLE DISTRICTS

District	Percentage

PERMITS

Date	Permit ID	Permit Type	Notes
09/26/11	11-289	RENOVATION	PERMIT PULLED AFTER T

BUILDING DETAILS

Model: **1.75 STORY FRAME CAPE**
Roof: **GABLE OR HIP/ASPHALT**
Ext: **VINYL SIDING**
Int: **PLYWOOD PANEL**
Floor: **CARPET/HARDWOOD**
Heat: **OIL/FA DUCTED**
Bedrooms: **3** Baths: **2.0** Fixtures: **6**
Extra Kitchens: Fireplaces:
A/C: **No** Generators:
Quality: **A0 AVG**
Com. Wall:
Size Adj: **1.0774** Base Rate: **RSA 60.00**
Bldg. Rate: **1.0347**
Sq. Foot Cost: **$ 62.08**

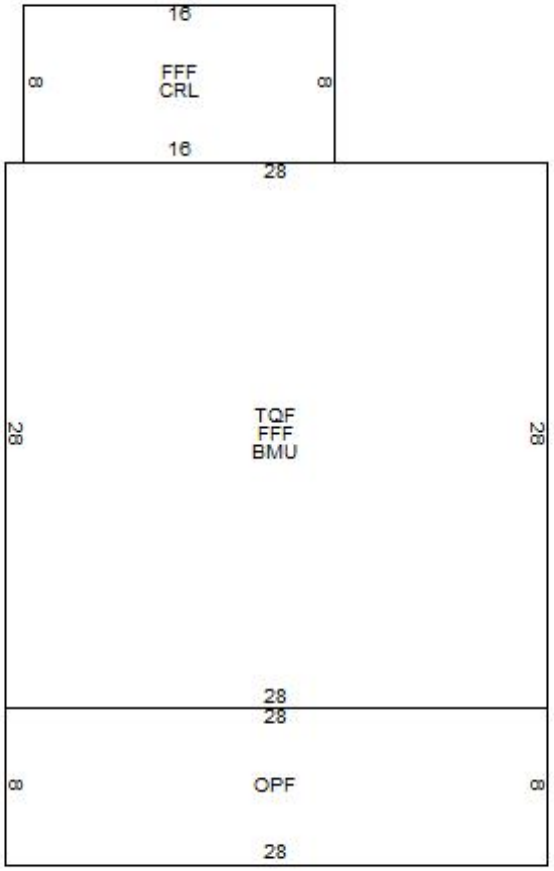

BUILDING SUB AREA DETAILS

ID	Description	Area	Adj.	Effect.
FFF	FST FLR FIN	912	1.00	912
TQF	3/4 STRY FIN	784	0.75	588
OPF	OPEN PORCH	224	0.25	56
CRL	CRAWL SPACE	128	0.05	6
BMU	BSMNT	784	0.15	118
GLA:	**1,500**	**2,832**		**1,680**

2013 BASE YEAR BUILDING VALUATION

Market Cost New:		**$ 104,294**
Year Built:		**1943**
Condition For Age:	GOOD	**26 %**
Physical:		
Functional:	LB/WB	**2 %**
Economic:		
Temporary:		
Total Depreciation:		**28 %**
Building Value:		**$ 75,100**

OWNER INFORMATION

COLEMAN JENNIFER J

122 LONDONDERRY TURNPIKE

AUBURN, NH 03032

SALES HISTORY

Date	Book	Page	Type	Price	Grantor
06/05/2012	5322	1004	Q I	388,000	LEMAY DANIEL
02/03/2011	5191	731	Q V	130,000	GAUTHIER, MICHAEL

PICTURE

LISTING HISTORY

04/03/13 DMPR
03/26/12 DMPL
12/07/11 DMVL DV SALES
04/28/11 DMPM
04/01/10 LMSL

NOTES

GREEN; EFF 04/10 SUBDIV 36341; 4/13 NOH EST INT IS 100% COMPLETED REMOVE FLAG & UC;

EXTRA FEATURES VALUATION

Feature Type	Units	Lngth x Width	Size Adj	Rate	Cond	Market Value	Notes
FIREPLACE 1-STAND	1		100	3,000.00	100	3,000	
						3,000	

MUNICIPAL SOFTWARE BY AVITAR

AUBURN ASSESSING OFFICE

PARCEL TOTAL TAXABLE VALUE

Year	Building	Features	Land
2011	$ 17,300	$ 3,000	$ 128,500
		Parcel Total:	$ 148,800
2013	**$ 221,600**	**$ 3,000**	**$ 144,400**
		Parcel Total:	**$ 369,000**

LAND VALUATION

Zone: RESIDENTIAL 1 & 2 **Minimum Acreage:** 2.00 **Minimum Frontage:** 200 **Site:** AVERAGE **Driveway:** PAVED **Road:** PAVED

Land Type	Units	Base Rate	NC	Adj	Site	Road	DWay	Topography	Cond	Ad Valorem	SPI	R	Tax Value	Notes
1F RES	2.000 ac	144,000	E	100	100	100	100	100 -- LEVEL	100	144,000	0	N	144,000	
1F RES	0.100 ac	x 3,500	X	100				100 -- LEVEL	100	400	0	N	400	
	2.100 ac									144,400			**144,400**	

Map: 000006 Lot: 000014 Sub: 000001 Card: 1 of 1 0122 LONDONDERRY TURNPIKE AUBURN Printed: 07/11/2013

PICTURE

OWNER

COLEMAN JENNIFER J

122 LONDONDERRY TURNPIKE

AUBURN, NH 03032

TAXABLE DISTRICTS

District	Percentage

PERMITS

Date	Permit ID	Permit Type	Notes
05/17/11	11-138	NEW HOME	CA 2010 100756
03/10/11	11-067	NEW HOME	UNFINISHED BASEMENT,

BUILDING DETAILS

Model: **2.00 STORY FRAME COLONIAL**
Roof: **GABLE OR HIP/ASPHALT**
Ext: **VINYL SIDING**
Int: **DRYWALL**
Floor: **HARDWOOD**
Heat: **GAS/FA DUCTED**
Bedrooms: **3** Baths: **2.5** Fixtures: **9**
Extra Kitchens: Fireplaces:
A/C: **No** Generators:
Quality: **A3 AVG+30**
Com. Wall:
Size Adj: **0.9170** Base Rate: **RSA 60.00**
Bldg. Rate: **1.1566**
Sq. Foot Cost: **$ 69.39**

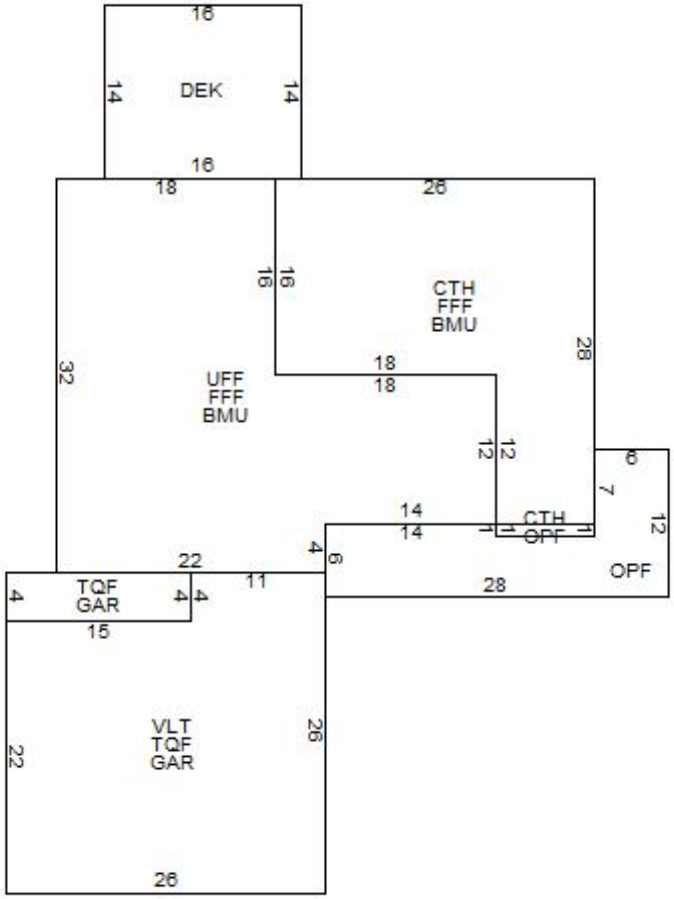

BUILDING SUB AREA DETAILS

ID	Description	Area	Adj.	Effect.
DEK	DECK/ENTRANCE	224	0.10	22
UFF	UPPER FLR FIN	808	1.00	808
FFF	FST FLR FIN	1320	1.00	1320
BMU	BSMNT	1320	0.15	198
CTH	CATHEDRAL	520	0.10	52
TQF	3/4 STRY FIN	676	0.75	507
GAR	GARAGE	676	0.45	304
VLT	VAULTED	616	0.05	31
OPF	OPEN PORCH	204	0.25	51
GLA:	**2,635**	**6,364**		**3,293**

2013 BASE YEAR BUILDING VALUATION

Market Cost New:		**$ 228,501**
Year Built:		**2011**
Condition For Age:	AVERAGE	**3 %**
Physical:		
Functional:		
Economic:		
Temporary:		
Total Depreciation:		**3 %**
Building Value:		**$ 221,600**

OWNER INFORMATION

MERROW BARRY R
MERROW KRISTINE P
152 FOREST DRIVE

AUBURN, NH 03032

SALES HISTORY

Date	Book	Page	Type	Price	Grantor
04/05/2013	5426	1862	Q I	347,000	BISSETT BRUCE A
04/01/2011	5205	2074	Q I	358,600	TAPP, GARY L

PICTURE

LISTING HISTORY

03/26/12	DMPR	
12/05/11	DMVM	DV SALES
07/26/11	DMVM	
06/15/11	INSP	MARKED FOR INSPECTION
09/22/06	KCPX	
04/23/03	LTRL	
11/14/02	JDRM	

NOTES

LT GRAY; DEK ABOVE OPF IN FRONT = NOT ACCESSABLE; 9/06 NEW LEACH FIELD, DNVI PER HO=X; 04/10 AP 369,900, GRANITE;3/12 NOH PER PERMIT NEW WATER TANK=N/C TO VALUE, REMOVE FLAG;

EXTRA FEATURES VALUATION

Feature Type	Units	Lngth x Width	Size Adj	Rate	Cond	Market Value	Notes
FIREPLACE 1-STAND	1		100	3,000.00	100	3,000	
COMMONLAND	1		100	5,000.00	100	5,000	
						8,000	

MUNICIPAL SOFTWARE BY AVITAR

AUBURN ASSESSING OFFICE

PARCEL TOTAL TAXABLE VALUE

Year	Building	Features	Land
2011	$ 188,700	$ 8,000	$ 150,900
		Parcel Total:	$ 347,600
2013	**$ 174,800**	**$ 8,000**	**$ 141,800**
		Parcel Total:	**$ 324,600**

LAND VALUATION

Zone: RESIDENTIAL 1 & 2 **Minimum Acreage:** 2.00 **Minimum Frontage:** 200 **Site:** AVERAGE **Driveway:** PAVED **Road:** PAVED

Land Type	Units	Base Rate	NC	Adj	Site	Road	DWay	Topography	Cond	Ad Valorem	SPI	R	Tax Value	Notes
1F RES	0.610 ac	124,400	G	120	100	100	100	95 -- MILD	100	141,800	0	N	141,800	
	0.610 ac									141,800			**141,800**	

PICTURE

OWNER

MERROW BARRY R
MERROW KRISTINE P
152 FOREST DRIVE

AUBURN, NH 03032

TAXABLE DISTRICTS

District	Percentage

PERMITS

Date	Permit ID	Permit Type	Notes
06/22/06	06-185	SEPTIC	

BUILDING DETAILS

Model: **2.00 STORY FRAME COLONIAL**
Roof: **GABLE OR HIP/ASPHALT**
Ext: **VINYL SIDING**
Int: **DRYWALL**
Floor: **HARDWOOD/HARD TILE**
Heat: **OIL/FA DUCTED**
Bedrooms: **3** Baths: **2.5** Fixtures: **11**
Extra Kitchens: Fireplaces:
A/C: **Yes 100.00 %** Generators:
Quality: **A1 AVG+10**
Com. Wall:
Size Adj: **0.9241** Base Rate: **RSA 60.00**
Bldg. Rate: **1.0360**
Sq. Foot Cost: **$ 62.16**

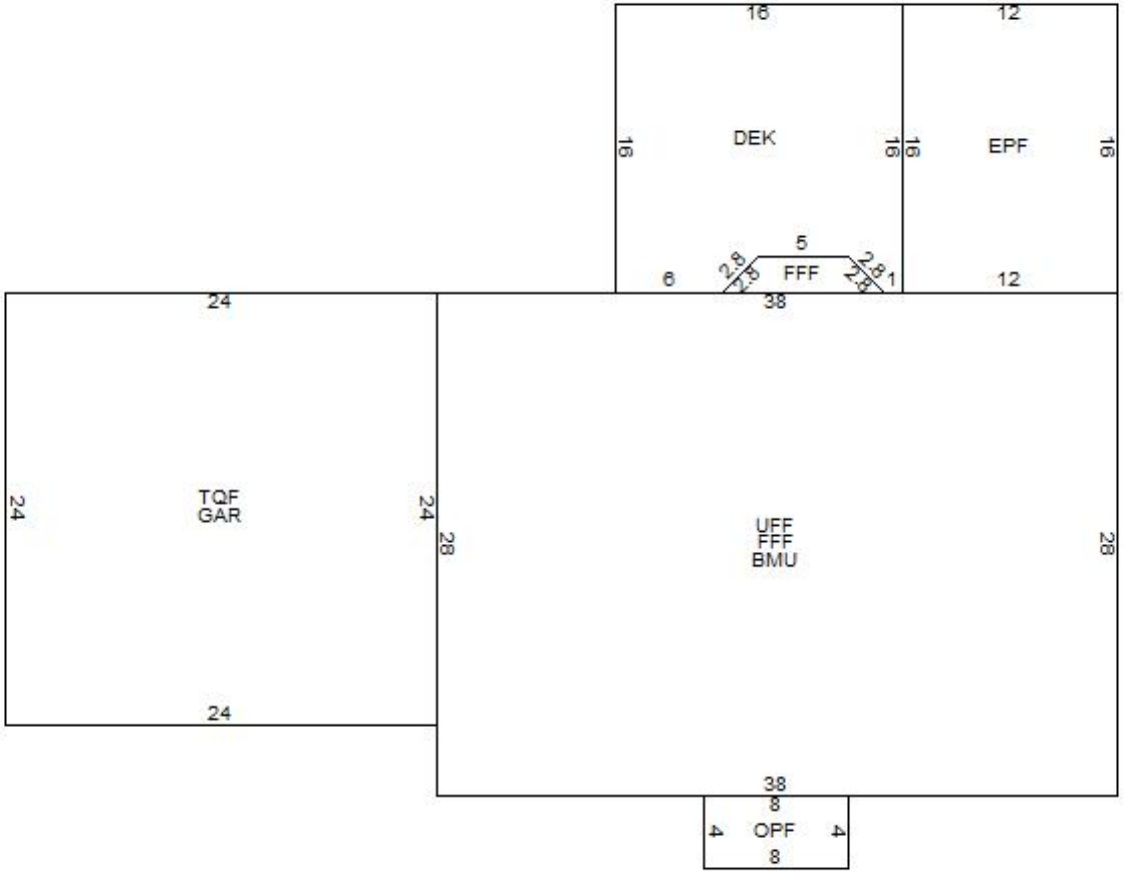

BUILDING SUB AREA DETAILS

ID	Description	Area	Adj.	Effect.
TQF	3/4 STRY FIN	576	0.75	432
GAR	GARAGE	576	0.45	259
OPF	OPEN PORCH	32	0.25	8
DEK	DECK/ENTRANCE	242	0.10	24
FFF	FST FLR FIN	1078	1.00	1078
EPF	ENCLSD PORCH	192	0.70	134
UFF	UPPER FLR FIN	1064	1.00	1064
BMU	BSMNT	1064	0.15	160
GLA:	**2,574**	**4,824**		**3,159**

2013 BASE YEAR BUILDING VALUATION

Market Cost New:		**$ 196,363**
Year Built:		**1999**
Condition For Age:	GOOD	**11 %**
Physical:		
Functional:		
Economic:		
Temporary:		
Total Depreciation:		**11 %**
Building Value:		**$ 174,800**

OWNER INFORMATION

PETRI JR CURTIS A
PETRI KRISTI L
184 BUNKER HILL ROAD

AUBURN, NH 03032

SALES HISTORY

Date	Book	Page	Type	Price	Grantor
04/01/2013	5424	256	Q I	275,000	STEIN, BRUCE P

PICTURE

LISTING HISTORY

03/02/12	DMVL	
01/30/12	INSP	MARKED FOR INSPECTION
04/06/04	JDPR	
10/08/02	CMRL	

NOTES

BROWN; HOT TUB NEXT TO DECK; FD=WALL HEIGHT;NEW SEPTIC PER B/P '043/12 CORRECTED BDRM & BTHRM COUNT, CHG'D CRL TO SLB & P/U VLT , FPL, SUMP PUMP & NEW ROOF IN 2010;

EXTRA FEATURES VALUATION

Feature Type	Units	Lngth x Width	Size Adj	Rate	Cond	Market Value	Notes
FIREPLACE 1-STAND	2		100	3,000.00	100	6,000	
SHED-WOOD	504	28 x 18	92	3.50	30	487	
						6,500	

MUNICIPAL SOFTWARE BY AVITAR

AUBURN ASSESSING OFFICE

PARCEL TOTAL TAXABLE VALUE

Year	Building	Features	Land
2011	$ 169,500	$ 3,500	$ 135,100
		Parcel Total:	$ 308,100
2013	**$ 135,000**	**$ 6,500**	**$ 150,900**
		Parcel Total:	**$ 292,400**

LAND VALUATION

Zone: RESIDENTIAL 1 & 2 **Minimum Acreage:** 2.00 **Minimum Frontage:** 200 **Site:** AVERAGE **Driveway:** DIRT **Road:** PAVED

Land Type	Units	Base Rate	NC	Adj	Site	Road	DWay	Topography	Cond	Ad Valorem	SPI	R	Tax Value	Notes
1F RES	2.000 ac	144,000	E	100	100	100	97	100 -- LEVEL	100	139,700	0	N	139,700	
1F RES	3.380 ac	x 3,500	X	100				95 -- MILD	100	11,200	0	N	11,200	
	5.380 ac									150,900			**150,900**	

Map: 000008 **Lot: 000006** **Sub: 000001** **Card: 1 of 1** **0184 BUNKER HILL ROAD** **AUBURN** **Printed: 07/11/2013**

PICTURE

OWNER

PETRI JR CURTIS A
PETRI KRISTI L
184 BUNKER HILL ROAD

AUBURN, NH 03032

TAXABLE DISTRICTS

District	Percentage

PERMITS

Date	Permit ID	Permit Type	Notes
12/04/03	03-402	SEPTIC	INSTALL SEPTIC PER CA2(

BUILDING DETAILS

Model: **2.00 STORY FRAME GAMBREL**
Roof: **GAMBREL/ASPHALT**
Ext: **CEDAR/REDWD**
Int: **DRYWALL**
Floor: **CARPET/HARDWOOD**
Heat: **OIL/HOT WATER**
Bedrooms: **4** Baths: **2.0** Fixtures: **6**
Extra Kitchens: Fireplaces:
A/C: **No** Generators:
Quality: **A0 AVG**
Com. Wall:
Size Adj: **0.9176** Base Rate: **RSA 60.00**
Bldg. Rate: **0.9262**
Sq. Foot Cost: **$ 55.57**

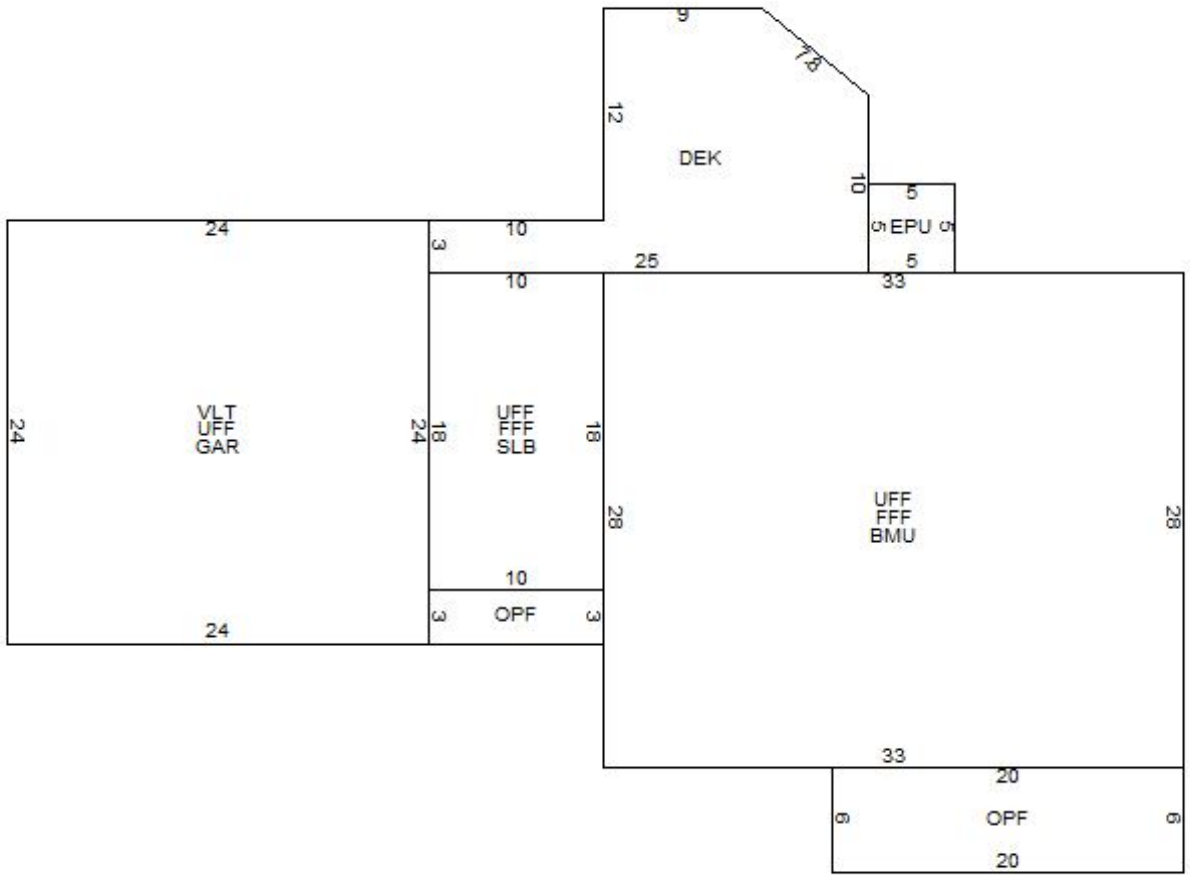

BUILDING SUB AREA DETAILS

ID	Description	Area	Adj.	Effect.
VLT	VAULTED	576	0.05	29
UFF	UPPER FLR FIN	1680	1.00	1680
GAR	GARAGE	576	0.45	259
FFF	FST FLR FIN	1104	1.00	1104
SLB	SLB	180	0.00	0
DEK	DECK/ENTRANCE	240	0.10	24
EPU	COVERED	25	0.35	9
BMU	BSMNT	924	0.15	139
OPF	OPEN PORCH	150	0.25	38
GLA:	**2,784**	**5,455**		**3,282**

2013 BASE YEAR BUILDING VALUATION

Market Cost New:		**$ 182,381**
Year Built:		**1950**
Condition For Age:	GOOD	**24 %**
Physical:		
Functional:	WH	**2 %**
Economic:		
Temporary:		
Total Depreciation:		**26 %**
Building Value:		**$ 135,000**

OWNER INFORMATION

LASALLE JOHN P
HEATON DIANA V
36 PASTURE ROAD

AUBURN, NH 03032

SALES HISTORY

Date	Book	Page	Type	Price	Grantor
02/13/2012	5288	503	Q I	375,000	OHAR OREST P
09/01/2005	4544	562	U V 14	130,000	MAVERICK DEVELOP

PICTURE

LISTING HISTORY

04/02/13	DMPR	
03/18/13	CRVM	
06/30/09	DMVM	
03/04/09	INSP	MARKED FOR INSPECTION
01/11/07	KCPR	
09/22/06	DSPR	
03/29/06	DSPR	
12/20/05	JDPL	

NOTES

YELLOW;1/07 PU FPL=EST,4/13 P/U GEN & CHANGED OPF TO EPF;3/13 NOH-NC;5/13 BR/BA FROM MLS

EXTRA FEATURES VALUATION

Feature Type	Units	Lngth x Width	Size Adj	Rate	Cond	Market Value	Notes
FIREPLACE 1-STAND	1		100	3,000.00	100	3,000	
						3,000	

MUNICIPAL SOFTWARE BY AVITAR

AUBURN ASSESSING OFFICE

PARCEL TOTAL TAXABLE VALUE

Year	Building	Features	Land
2011	$ 257,000	$ 3,000	$ 171,800
		Parcel Total:	$ 431,800
2013	**$ 224,800**	**$ 3,000**	**$ 175,800**
		Parcel Total:	**$ 403,600**

LAND VALUATION

Zone: RESIDENTIAL 1 & 2 **Minimum Acreage:** 2.00 **Minimum Frontage:** 200 **Site:** AVERAGE **Driveway:** PAVED **Road:** PAVED

Land Type	Units	Base Rate	NC	Adj	Site	Road	DWay	Topography	Cond	Ad Valorem	SPI	R	Tax Value	Notes
1F RES	2.000 ac	144,000	G	120	100	100	100	100 -- LEVEL	100	172,800	0	N	172,800	
1F RES	0.892 ac	x 3,500	X	100				95 -- MILD	100	3,000	0	N	3,000	
	2.892 ac									175,800			**175,800**	

PICTURE

OWNER

LASALLE JOHN P
HEATON DIANA V
36 PASTURE ROAD

AUBURN, NH 03032

TAXABLE DISTRICTS

District	Percentage

PERMITS

Date	Permit ID	Permit Type	Notes
09/26/05	05-376	NEW HOME	INCLUDES ALL FEES - SUI

BUILDING DETAILS

Model: **2.50 STORY FRAME COLONIAL**
Roof: **GABLE OR HIP/ASPHALT**
Ext: **VINYL SIDING**
Int: **DRYWALL**
Floor: **HARDWOOD/HARD TILE**
Heat: **OIL/FA DUCTED**
Bedrooms: **3** Baths: **2.5** Fixtures:
Extra Kitchens: Fireplaces:
A/C: **Yes 100.00 %** Generators: **1**
Quality: **A2 AVG+20**
Com. Wall:
Size Adj: **0.8982** Base Rate: **RSA 60.00**
Bldg. Rate: **1.1091**
Sq. Foot Cost: **$ 66.55**

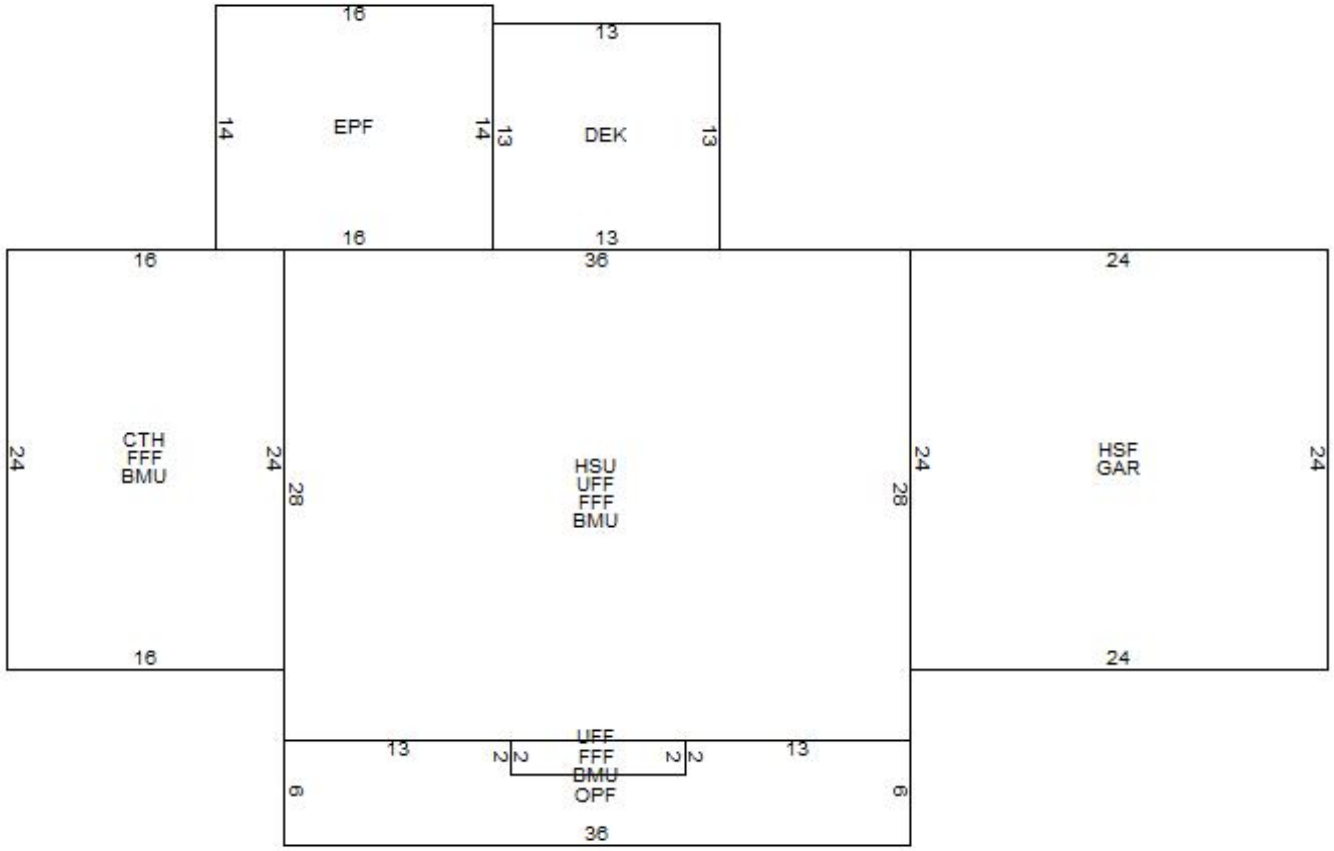

BUILDING SUB AREA DETAILS

ID	Description	Area	Adj.	Effect.
HSU	1/2 STRY UNFIN	1008	0.25	252
UFF	UPPER FLR FIN	1028	1.00	1028
FFF	FST FLR FIN	1412	1.00	1412
BMU	BSMNT	1412	0.15	212
OPF	OPEN PORCH	196	0.25	49
CTH	CATHEDRAL	384	0.10	38
HSF	1/2 STRY FIN	576	0.50	288
GAR	GARAGE	576	0.45	259
DEK	DECK/ENTRANCE	169	0.10	17
EPF	ENCLSD PORCH	224	0.70	157
GLA:	**2,728**	**6,985**		**3,712**

2013 BASE YEAR BUILDING VALUATION

Market Cost New:		**$ 247,034**
Year Built:		**2005**
Condition For Age:	GOOD	**9 %**
Physical:		
Functional:		
Economic:		
Temporary:		
Total Depreciation:		**9 %**
Building Value:		**$ 224,800**

OWNER INFORMATION

SPADA SCOTT A
SPADA LISA M
122 COLEMAN ROAD

AUBURN, NH 03032

SALES HISTORY

Date	Book	Page	Type	Price	Grantor
08/21/2012	5347	2389	Q I	369,000	GALLER, SARAH C &
08/03/2010	5131	933	U I 44	40	GALLER, MICHAEL P
05/18/2010	5111	1537	U I 46	40	GALLER, MICHAEL P
10/02/2008	4953	1793	U I 44	40	GALLER, MICHAEL P

PICTURE

LISTING HISTORY

04/02/13	DMPR	
03/18/13	CRVM	
06/30/09	DMVM	
03/04/09	INSP	MARKED FOR INSPECTION
10/22/07	KMVL	
10/03/07	INSP	MARKED FOR INSPECTION
10/28/02	CMRL	

NOTES

CREAM; IECA;BTH COUNT=1-5PC,1- 4PC, 1-2PC; 16'REAR DORMER ABOVE GAR; HO IN PROCESS OF FINISHING BMU-RM FIN=12X15-PICKUP O8 ADD BMF;6/09 NOH - CORRECTED DECK;4/13 TALK TO H/O DAUGHTER, NEW OWNERS, NO INFO;3/13 DAUGHTER ANS DOOR-NO INFO GIVEN;INT K/B LACK QUALITY OF A2 HOME=A1

EXTRA FEATURES VALUATION

Feature Type	Units	Lngth x Width	Size Adj	Rate	Cond	Market Value	Notes
FIREPLACE 1-STAND	1		100	3,000.00	100	3,000	
POOL-ABOVE GROUND	374	22 x 17	103	3.00	100	1,156	ROUND
						4,200	

MUNICIPAL SOFTWARE BY AVITAR

AUBURN ASSESSING OFFICE

PARCEL TOTAL TAXABLE VALUE

Year	Building	Features	Land
2011	$ 213,500	$ 4,200	$ 171,000
		Parcel Total:	$ 388,700
2013	**$ 185,100**	**$ 4,200**	**$ 179,600**
		Parcel Total:	**$ 368,900**

LAND VALUATION

Zone: RESIDENTIAL 1 & 2 **Minimum Acreage:** 2.00 **Minimum Frontage:** 200 **Site:** GOOD **Driveway:** PAVED **Road:** PAVED

Land Type	Units	Base Rate	NC	Adj	Site	Road	DWay	Topography	Cond	Ad Valorem	SPI	R	Tax Value	Notes
1F RES	2.000 ac	144,000	G	120	103	100	100	100 -- LEVEL	100	178,000	0	N	178,000	
1F RES	0.480 ac	x 3,500	X	100				95 -- MILD	100	1,600	0	N	1,600	
	2.480 ac									179,600			**179,600**	

Map: 000008 **Lot: 000017** **Sub: 000008** **Card: 1 of 1** **0122 COLEMAN ROAD** **AUBURN** **Printed: 07/11/2013**

PICTURE

OWNER

SPADA SCOTT A
SPADA LISA M
122 COLEMAN ROAD

AUBURN, NH 03032

TAXABLE DISTRICTS

District	Percentage

PERMITS

Date	Permit ID	Permit Type	Notes
08/06/12	12-337	REMODEL	PERMIT PULLED AFTER T

BUILDING DETAILS

Model: **2.00 STORY FRAME COLONIAL**
Roof: **GABLE OR HIP/ASPHALT**
Ext: **VINYL SIDING**
Int: **DRYWALL**
Floor: **CARPET/HARDWOOD**
Heat: **OIL/HOT WATER**
Bedrooms: **4** Baths: **3.5** Fixtures:
Extra Kitchens: Fireplaces:
A/C: **No** Generators:
Quality: **A1 AVG+10**
Com. Wall:
Size Adj: **0.9048** Base Rate: **RSA 60.00**
Bldg. Rate: **0.9754**
Sq. Foot Cost: **$ 58.52**

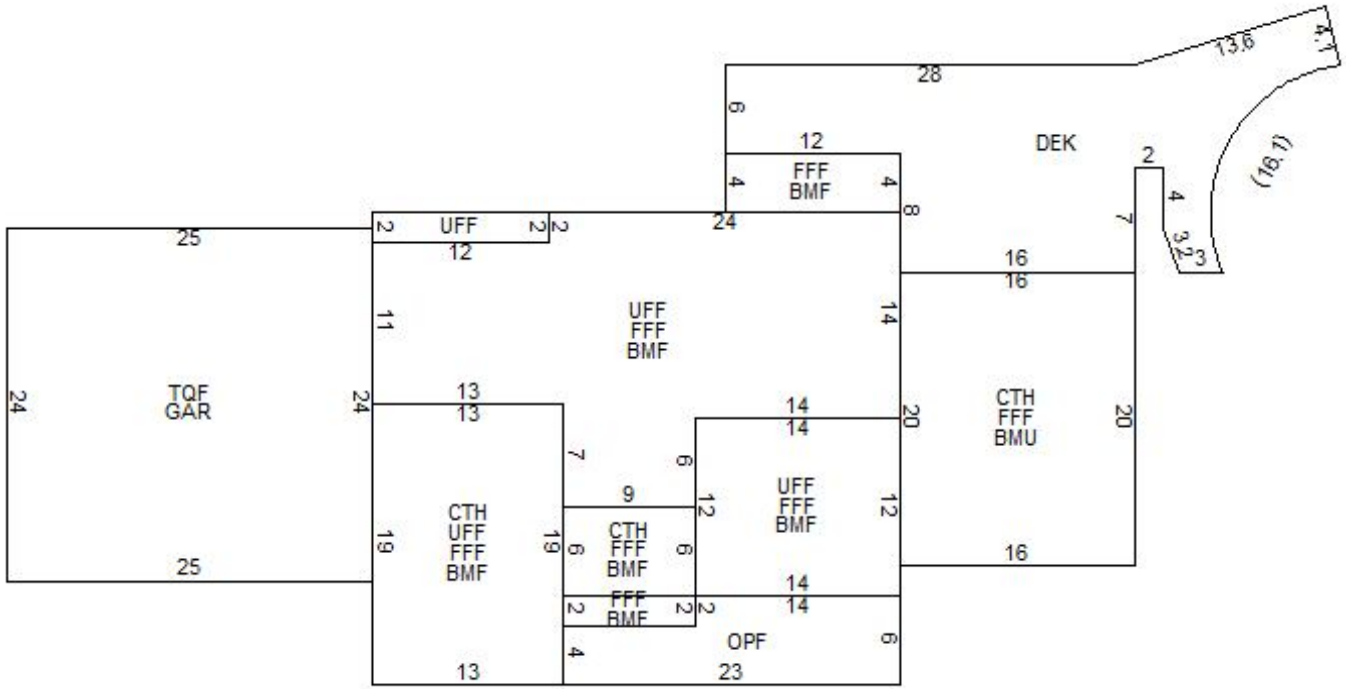

BUILDING SUB AREA DETAILS

ID	Description	Area	Adj.	Effect.
OPF	OPEN PORCH	120	0.25	30
TQF	3/4 STRY FIN	600	0.75	450
GAR	GARAGE	600	0.45	270
UFF	UPPER FLR FIN	960	1.00	960
FFF	FST FLR FIN	1376	1.00	1376
BMF	BSMNT FINISHED	1056	0.30	317
CTH	CATHEDRAL	621	0.10	62
BMU	BSMNT	320	0.15	48
DEK	DECK/ENTRANCE	403	0.10	40
GLA:	**2,786**	**6,056**		**3,553**

2013 BASE YEAR BUILDING VALUATION

Market Cost New:		**$ 207,922**
Year Built:		**2000**
Condition For Age:	GOOD	**11 %**
Physical:		
Functional:		
Economic:		
Temporary:		
Total Depreciation:		**11 %**
Building Value:		**$ 185,100**

OWNER INFORMATION

PRAY CRAIG
PRAY LISA
32 DONALD DRIVE

AUBURN, NH 03032

SALES HISTORY

Date	Book	Page	Type	Price	Grantor
09/04/2012	5352	405	Q I	455,000	MAVERICK
12/17/2010	5177	956	Q V	175,000	BAKER JEREMY A
11/03/2008	4960	1341	Q V	175,000	MAVERICK
07/26/2005	4520	2473	Q V	385,000	ROSS SHEILA
12/23/2002	1829	0525	U V 81		SAWYER

PICTURE

LISTING HISTORY

04/02/13	DMPR
03/18/13	CRVM
03/26/12	DMPE
04/27/11	DMPL
04/02/10	CRVL
03/24/10	DMPL
01/13/10	JBPL
04/08/09	DMPL

NOTES

CRM; ACREAGE CORRECTED PER DEED/SURVEY; 4-SALE REMAX 589-8800; 4/11 TRAY CEIL IN MSTR BDRM 13X8; PU NEW HSE; 2 PERSON CUSTOM SHOWER; 3/12 NOH HSE USED AS MODEL; 3/13 NOH-NC;4/13 (3) GRANITE LIGHT POLES NEXT TO DRWY, REMOVE FLAG;

EXTRA FEATURES VALUATION

Feature Type	Units	Lngth x Width	Size Adj	Rate	Cond	Market Value	Notes
FIREPLACE 1-STAND	1		100	3,000.00	100	3,000	GAS
						3,000	

MUNICIPAL SOFTWARE BY AVITAR

AUBURN ASSESSING OFFICE

PARCEL TOTAL TAXABLE VALUE

Year	Building	Features	Land
2011	$ 125,900	$ 3,000	$ 156,500
		Parcel Total:	$ 285,400
2013	**$ 231,400**	**$ 3,000**	**$ 177,600**
		Parcel Total:	**$ 412,000**

LAND VALUATION

Zone: RESIDENTIAL 1 & 2 **Minimum Acreage:** 2.00 **Minimum Frontage:** 200 **Site:** GOOD **Driveway:** PAVED **Road:** PAVED

Land Type	Units	Base Rate	NC	Adj	Site	Road	DWay	Topography	Cond	Ad Valorem	SPI	R	Tax Value	Notes
1F RES	2.000 ac	144,000	H	130	103	100	100	90 -- ROLLING	100	173,500	0	N	173,500	
1F RES	1.363 ac	x 3,500	X	100				85 -- MODERATE	100	4,100	0	N	4,100	
	3.363 ac									177,600			**177,600**	

PICTURE

OWNER

PRAY CRAIG
PRAY LISA
32 DONALD DRIVE

AUBURN, NH 03032

TAXABLE DISTRICTS

District	Percentage

PERMITS

Date	Permit ID	Permit Type	Notes
01/27/11	11-030	NEW HOME	2 STORY, UNFINISHED BA
04/07/09	08-292	FOUNDATION	FOUNDATION ONLY

BUILDING DETAILS

Model: **2.00 STORY FRAME COLONIAL**
Roof: **GABLE OR HIP/ASPHALT**
Ext: **VINYL SIDING**
Int: **DRYWALL**
Floor: **CARPET/HARDWOOD**
Heat: **GAS/FA DUCTED**
Bedrooms: **4** Baths: **3.0** Fixtures: **11**
Extra Kitchens: Fireplaces:
A/C: **Yes 100.00 %** Generators:
Quality: **A3 AVG+30**
Com. Wall:
Size Adj: **0.9141** Base Rate: **RSA 60.00**
Bldg. Rate: **1.2111**
Sq. Foot Cost: **$ 72.67**

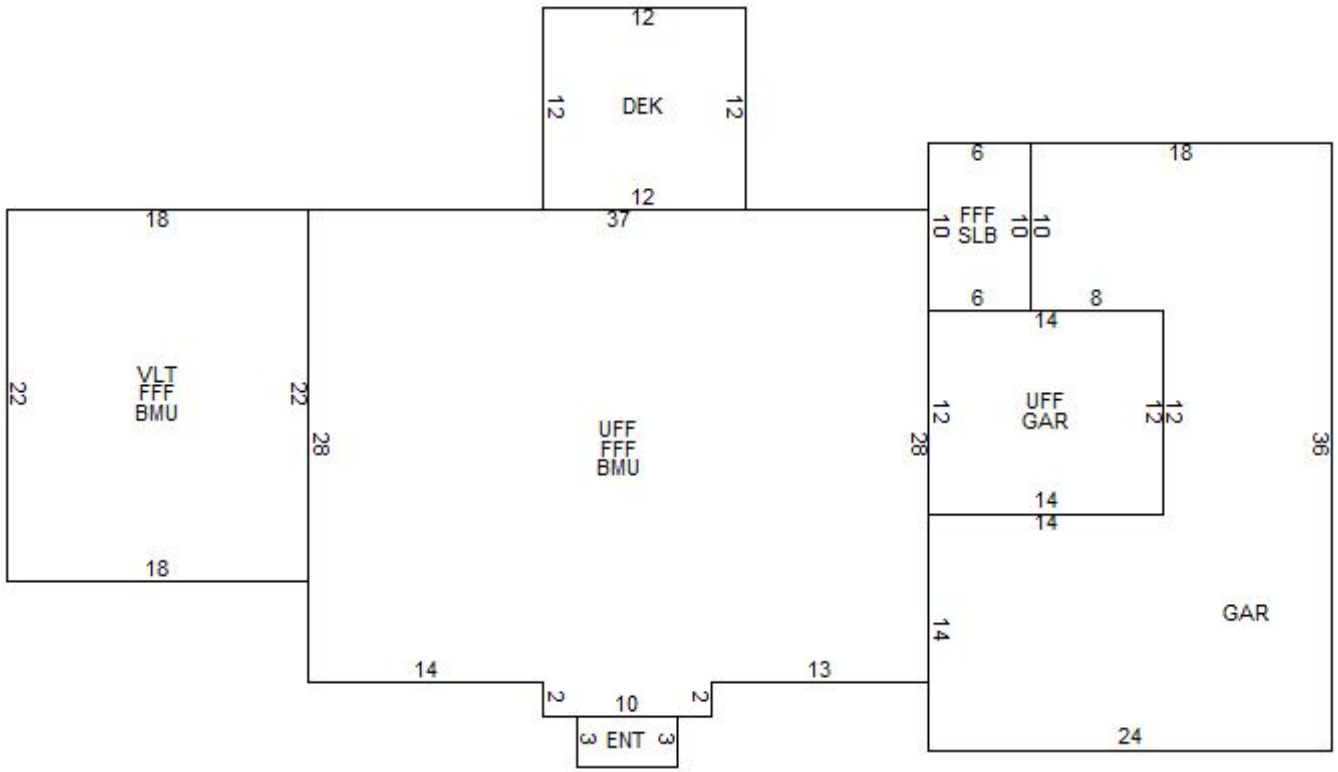

BUILDING SUB AREA DETAILS

ID	Description	Area	Adj.	Effect.
BMU	BSMNT	1452	0.15	218
UFF	UPPER FLR FIN	1224	1.00	1224
ENT	ENTRANCE	18	0.10	2
SLB	SLB	60	0.00	0
GAR	GARAGE	804	0.45	362
DEK	DECK/ENTRANCE	144	0.10	14
VLT	VAULTED	396	0.05	20
FFF	FST FLR FIN	1512	1.00	1512
GLA:	**2,736**	**5,610**		**3,352**

2013 BASE YEAR BUILDING VALUATION

Market Cost New:		**$ 243,590**
Year Built:		**2010**
Condition For Age:	GOOD	**5 %**
Physical:		
Functional:		
Economic:		
Temporary:		
Total Depreciation:		**5 %**
Building Value:		**$ 231,400**

OWNER INFORMATION

DION MICHAEL W
DION KATHLEEN M
17 DONALD DRIVE

AUBURN, NH 03032-0833

SALES HISTORY

Date	Book	Page	Type	Price	Grantor
08/24/2012	5348	2905	Q I	400,533	MAVERICK

PICTURE

LISTING HISTORY

04/02/13 DMPR
03/26/12 DMPM
04/12/10 LMUL

NOTES

TAN; AP W/ HOUSE 369,900; 4/13 NOH P/U A/C & GEN;

EXTRA FEATURES VALUATION

Feature Type	Units	Lngth x Width	Size Adj	Rate	Cond	Market Value	Notes
FIREPLACE 1-STAND	1		100	3,000.00	100	3,000	
						3,000	

MUNICIPAL SOFTWARE BY AVITAR

AUBURN ASSESSING OFFICE

PARCEL TOTAL TAXABLE VALUE

Year	Building	Features	Land
2011	$ 0	$ 0	$ 146,200
		Parcel Total:	$ 146,200
2013	**$ 179,600**	**$ 3,000**	**$ 177,800**
		Parcel Total:	**$ 360,400**

LAND VALUATION

Zone: RESIDENTIAL 1 & 2 **Minimum Acreage:** 2.00 **Minimum Frontage:** 200 **Site:** AVERAGE **Driveway:** PAVED **Road:** PAVED

Land Type	Units	Base Rate	NC	Adj	Site	Road	DWay	Topography	Cond	Ad Valorem	SPI	R	Tax Value	Notes
1F RES	2.000 ac	144,000	H	130	100	100	100	95 -- MILD	100	177,800	0	N	177,800	
1F RES	0.001 ac	x 3,500	X	100				95 -- MILD	100	0	0	N	0	
	2.001 ac									177,800			**177,800**	

PICTURE

OWNER

DION MICHAEL W
DION KATHLEEN M
17 DONALD DRIVE

AUBURN, NH 03032-0833

TAXABLE DISTRICTS

District	Percentage

PERMITS

Date	Permit ID	Permit Type	Notes
12/27/11	11-464	NEW HOME	UNFINISHED BASEMENT,

BUILDING DETAILS

Model: **2.00 STORY FRAME COLONIAL**
Roof: **GABLE OR HIP/ASPHALT**
Ext: **VINYL SIDING**
Int: **DRYWALL**
Floor: **HARDWOOD/CARPET**
Heat: **GAS/FA DUCTED**
Bedrooms: **4** Baths: **2.5** Fixtures:
Extra Kitchens: Fireplaces:
A/C: **Yes 100.00 %** Generators: **1**
Quality: **A2 AVG+20**
Com. Wall:
Size Adj: **0.9645** Base Rate: **RSA 60.00**
Bldg. Rate: **1.1910**
Sq. Foot Cost: **$ 71.46**

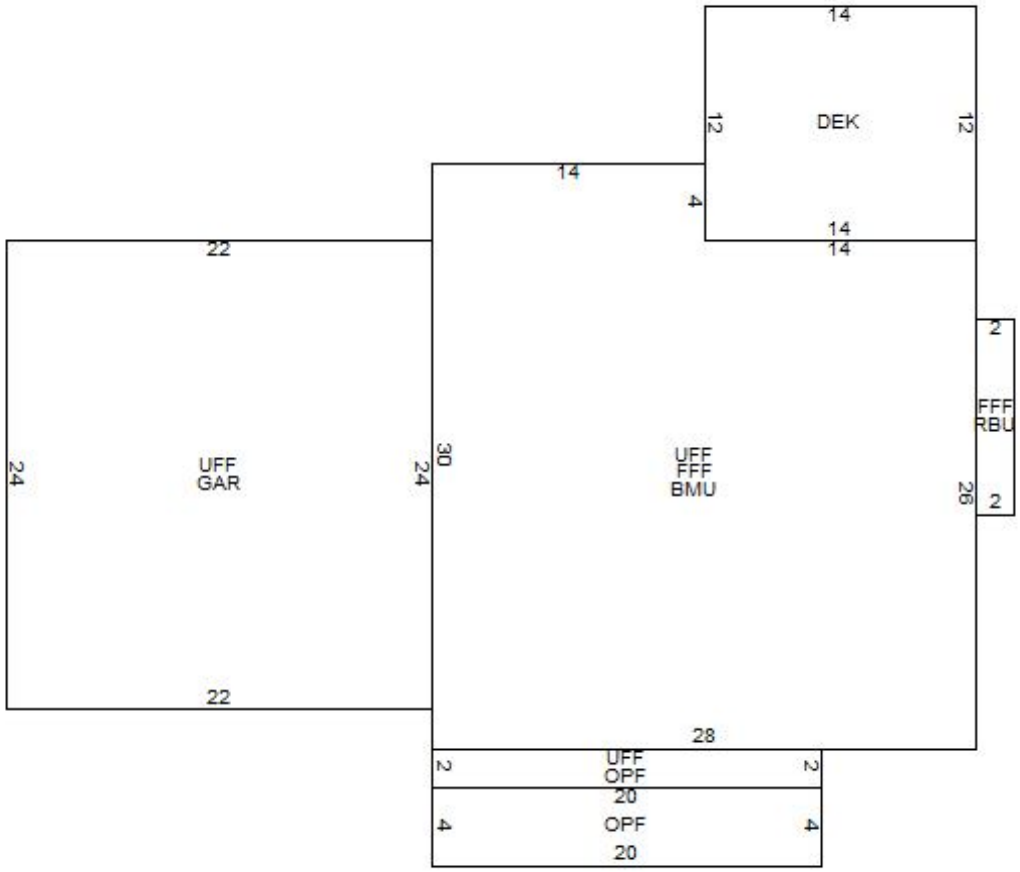

BUILDING SUB AREA DETAILS

ID	Description	Area	Adj.	Effect.
UFF	UPPER FLR FIN	1352	1.00	1352
GAR	GARAGE	528	0.45	238
FFF	FST FLR FIN	804	1.00	804
BMU	BSMNT	784	0.15	118
DEK	DECK/ENTRANCE	168	0.10	17
RBU	RAISED BSMNT	20	0.25	5
OPF	OPEN PORCH	120	0.25	30
GLA:	**2,156**	**3,776**		**2,564**

2013 BASE YEAR BUILDING VALUATION

Market Cost New:		**$ 183,223**
Year Built:		**2012**
Condition For Age:	AVERAGE	**2 %**
Physical:		
Functional:		
Economic:		
Temporary:		
Total Depreciation:		**2 %**
Building Value:		**$ 179,600**

OWNER INFORMATION

FORCIONE DARIA M
POTHIER JOHN E
6 LILAK DRIVE

AUBURN, NH 03032

SALES HISTORY

Date	Book	Page	Type	Price	Grantor
01/13/2012	5279	1865	Q I	233,000	GALLANT, PATRICIA

PICTURE

LISTING HISTORY

03/05/12	DMVM	
01/30/12	INSP	MARKED FOR INSPECTION
11/27/07	DMCL	
10/17/07	KMVM	
10/03/07	INSP	MARKED FOR INSPECTION
07/15/03	ALHC	
10/16/02	CMRM	

NOTES

TAN; HEARTH IN LIVING ROOM NOT IN;10/07 NOH-DNVI;3 BAY GAR-1 BAY=12' HIGH(14X32) 11/07 NEW ROOF IN '05;DNPU HOT TUB IN BSMT, ABLE TO REMOVE VIA SM GAR DOOR IN BSMT;3/12 NOH CHANGED ENT TO OPF & REMOVED OPF (2X4);

EXTRA FEATURES VALUATION

Feature Type	Units	Lngth x Width	Size Adj	Rate	Cond	Market Value	Notes
GARAGE-1 STY/ATTIC	1,280	40 x 32	73	24.00	100	22,426	
						22,400	

MUNICIPAL SOFTWARE BY AVITAR

AUBURN ASSESSING OFFICE

PARCEL TOTAL TAXABLE VALUE

Year	Building	Features	Land
2011	$ 110,300	$ 22,400	$ 134,700
		Parcel Total:	$ 267,400
2013	**$ 94,000**	**$ 22,400**	**$ 143,600**
		Parcel Total:	**$ 260,000**

LAND VALUATION

Zone: RESIDENTIAL 1 & 2 **Minimum Acreage:** 2.00 **Minimum Frontage:** 200 **Site:** AVERAGE **Driveway:** PAVED **Road:** PAVED

Land Type	Units	Base Rate	NC	Adj	Site	Road	DWay	Topography	Cond	Ad Valorem	SPI	R	Tax Value	Notes
1F RES	2.000 ac	144,000	F	105	100	100	100	95 -- MILD	100	143,600	0	N	143,600	
	2.000 ac									143,600			**143,600**	

PICTURE

OWNER

FORCIONE DARIA M
POTHIER JOHN E
6 LILAK DRIVE

AUBURN, NH 03032

TAXABLE DISTRICTS

District	Percentage

PERMITS

Date	Permit ID	Permit Type	Notes

BUILDING DETAILS

Model: **1.50 STORY FRAME CAPE**
Roof: **GABLE OR HIP/STANDING SEAM**
Ext: **VINYL SIDING**
Int: **DRYWALL**
Floor: **CARPET/HARDWOOD**
Heat: **OIL/HOT WATER**
Bedrooms: **2** Baths: **2.0** Fixtures: **7**
Extra Kitchens: Fireplaces:
A/C: **Yes 100.00 %** Generators:
Quality: **A0 AVG**
Com. Wall:
Size Adj: **1.0552** Base Rate: **RSA 60.00**
Bldg. Rate: **1.0864**
Sq. Foot Cost: **$ 65.19**

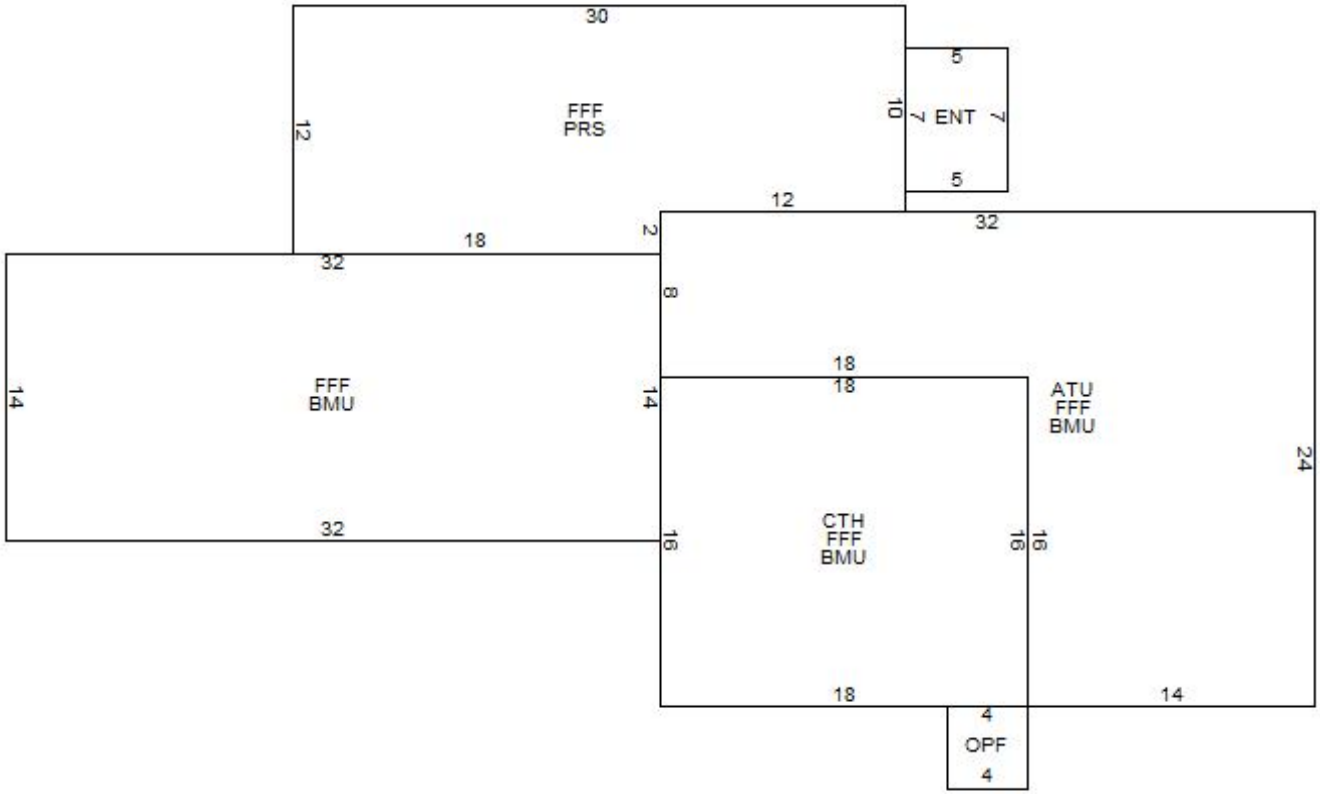

BUILDING SUB AREA DETAILS

ID	Description	Area	Adj.	Effect.
PRS	PIER	336	-0.05	-17
CTH	CATHEDRAL	288	0.10	29
BMU	BSMNT	1216	0.15	182
OPF	OPEN PORCH	16	0.25	4
ENT	ENTRANCE	35	0.10	4
FFF	FST FLR FIN	1552	1.00	1552
ATU	ATTIC	480	0.10	48
GLA:	**1,552**	**3,923**		**1,802**

2013 BASE YEAR BUILDING VALUATION

Market Cost New:		**$ 117,472**
Year Built:		**1984**
Condition For Age:	AVERAGE	**20 %**
Physical:		
Functional:		
Economic:		
Temporary:		
Total Depreciation:		**20 %**
Building Value:		**$ 94,000**

OWNER INFORMATION

ROUSSEAU HOLLY M

15 MINER ROAD

AUBURN, NH 03032

SALES HISTORY

Date	Book	Page	Type	Price	Grantor
06/15/2012	5325	2461	Q I	338,000	DANOS, SANDRA J
09/20/2000	3505	1679	Q I	266,800	SIERRA HOMES INC

PICTURE

LISTING HISTORY

03/22/13	CRVM	
05/21/09	DMVL	
03/04/09	INSP	MARKED FOR INSPECTION
08/09/06	KCVL	
04/23/03	LTRL	
11/01/02	JDRM	

NOTES

BEIGE;5/09 3 EYE DORMERS PLUS ROOF LINE=ATF OVER OPF - CORRECT ERROR ON CARD BMG TO BMU; 3/13 NOH-NC;

EXTRA FEATURES VALUATION

Feature Type	Units	Lngth x Width	Size Adj	Rate	Cond	Market Value	Notes
FIREPLACE 1-STAND	1		100	3,000.00	100	3,000	
						3,000	

MUNICIPAL SOFTWARE BY AVITAR

AUBURN ASSESSING OFFICE

PARCEL TOTAL TAXABLE VALUE

Year	Building	Features	Land
2011	$ 180,200	$ 3,000	$ 154,300
		Parcel Total:	$ 337,500
2013	**$ 165,100**	**$ 3,000**	**$ 165,000**
		Parcel Total:	**$ 333,100**

LAND VALUATION

Zone: RESIDENTIAL 1 & 2 **Minimum Acreage:** 2.00 **Minimum Frontage:** 200 **Site:** AVERAGE **Driveway:** PAVED **Road:** PAVED

Land Type	Units	Base Rate	NC	Adj	Site	Road	DWay	Topography	Cond	Ad Valorem	SPI	R	Tax Value	Notes
1F RES	2.000 ac	144,000	G	120	100	100	100	95 -- MILD	100	164,200	0	N	164,200	
1F RES	0.224 ac	x 3,500	X	100					100	800	0	N	800	
	2.224 ac									165,000			**165,000**	

PICTURE

OWNER

ROUSSEAU HOLLY M

15 MINER ROAD

AUBURN, NH 03032

TAXABLE DISTRICTS

District	Percentage

PERMITS

Date	Permit ID	Permit Type	Notes

BUILDING DETAILS

Model: **1.75 STORY FRAME CAPE**
Roof: **GABLE OR HIP/ASPHALT**
Ext: **VINYL SIDING**
Int: **DRYWALL**
Floor: **CARPET/HARD TILE**
Heat: **GAS/HOT WATER**
Bedrooms: **3** Baths: **3.0** Fixtures: **9**
Extra Kitchens: Fireplaces:
A/C: **No** Generators:
Quality: **A2 AVG+20**
Com. Wall:
Size Adj: **0.9483** Base Rate: **RSA 60.00**
Bldg. Rate: **1.1152**
Sq. Foot Cost: **$ 66.91**

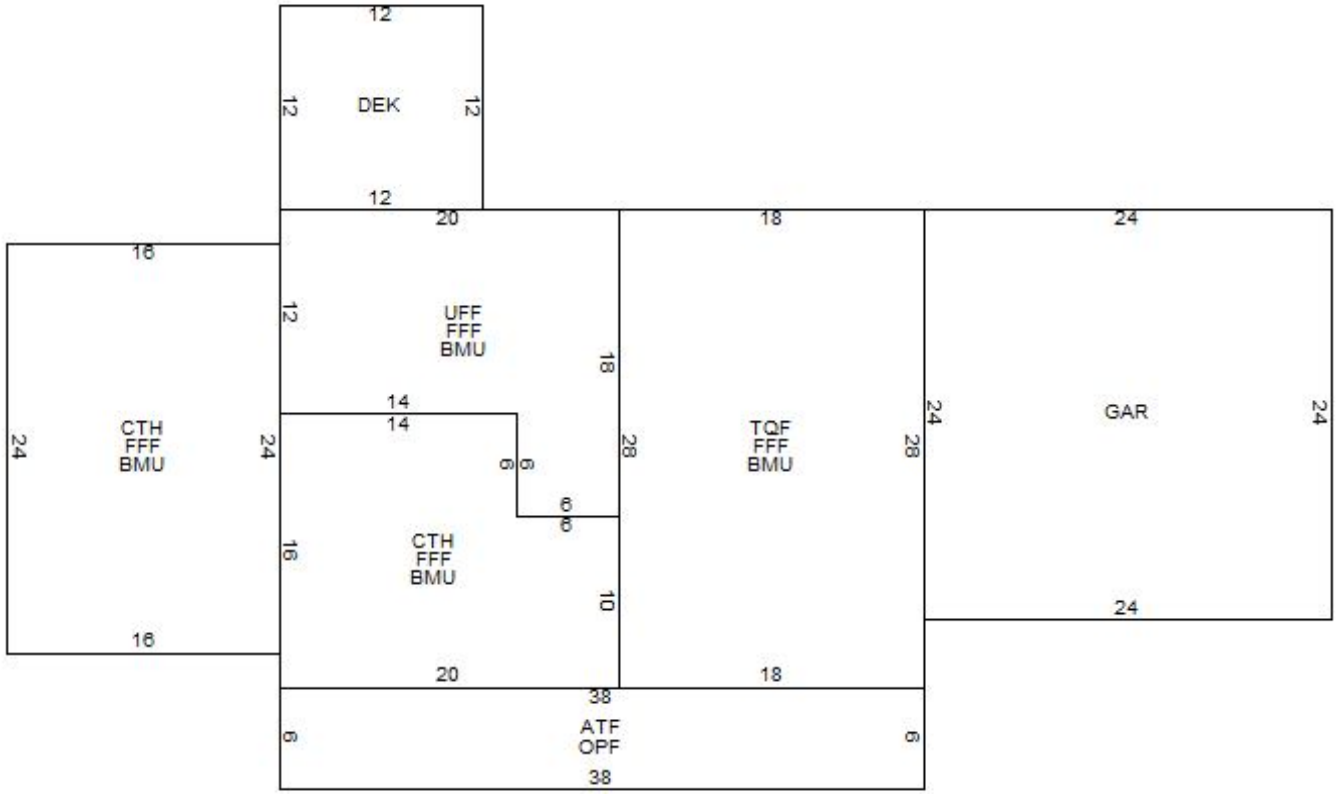

BUILDING SUB AREA DETAILS

ID	Description	Area	Adj.	Effect.
DEK	DECK/ENTRANCE	144	0.10	14
CTH	CATHEDRAL	668	0.10	67
FFF	FST FLR FIN	1448	1.00	1448
BMU	BSMNT	1448	0.15	217
ATF	ATTIC FINISHED	228	0.25	57
GAR	GARAGE	576	0.45	259
TQF	3/4 STRY FIN	504	0.75	378
UFF	UPPER FLR FIN	276	1.00	276
OPF	OPEN PORCH	228	0.25	57
GLA:	**2,159**	**5,520**		**2,773**

2013 BASE YEAR BUILDING VALUATION

Market Cost New:		**$ 185,541**
Year Built:		**2000**
Condition For Age:	GOOD	**11 %**
Physical:		
Functional:		
Economic:		
Temporary:		
Total Depreciation:		**11 %**
Building Value:		**$ 165,100**

OWNER INFORMATION

BENYIK PETER
BENYIK REBECCA
71 CEDAR CREST LANE

AUBURN, NH 03032

SALES HISTORY

Date	Book	Page	Type	Price	Grantor
10/09/2012	5364	1802	Q I	500,000	STAPEL SCOTT L
01/09/2006	4604	2693	Q I	679,930	PEAK DEVELOPMENT
09/13/2004	4362	816	Q V	155,000	TENN SYLVIA
08/08/2001	??	??	U V 24	1	UNKNOWN

PICTURE

LISTING HISTORY

03/22/13	CRVM	
03/07/12	DMVM	
01/30/12	INSP	MARKED FOR INSPECTION
08/04/06	BHUR	
12/19/05	DMPM	
10/12/04	DWP	
10/30/02	JDRL	

NOTES

TAN/BRICK; SLOPES DOWN FROM ROAD; 3/12 NOH EST 2ND FPL IN ROOM OVER GAR=VENT;3/13 NOH-NC; GRANITE/CHERRY/SS KIT

EXTRA FEATURES VALUATION

Feature Type	Units	Lngth x Width	Size Adj	Rate	Cond	Market Value	Notes
FIREPLACE 1-STAND	2		100	3,000.00	100	6,000	
						6,000	

MUNICIPAL SOFTWARE BY AVITAR

AUBURN ASSESSING OFFICE

PARCEL TOTAL TAXABLE VALUE

Year	Building	Features	Land
2011	$ 310,400	$ 3,000	$ 184,600
		Parcel Total:	$ 498,000
2013	**$ 294,400**	**$ 6,000**	**$ 189,200**
		Parcel Total:	**$ 489,600**

LAND VALUATION

Zone: RESIDENTIAL 1 & 2 **Minimum Acreage:** 2.00 **Minimum Frontage:** 200 **Site:** GOOD **Driveway:** PAVED **Road:** PAVED

Land Type	Units	Base Rate	NC	Adj	Site	Road	DWay	Topography	Cond	Ad Valorem	SPI	R	Tax Value	Notes
1F RES	2.000 ac	144,000	H	130	103	100	100	90 -- ROLLING	100	173,500	0	N	173,500	
1F RES	5.283 ac	x 3,500	X	100				85 -- MODERATE	100	15,700	0	N	15,700	
	7.283 ac									189,200			**189,200**	

PICTURE

OWNER

BENYIK PETER
BENYIK REBECCA
71 CEDAR CREST LANE

AUBURN, NH 03032

TAXABLE DISTRICTS

District	Percentage

PERMITS

Date	Permit ID	Permit Type	Notes
12/29/04	04-588	NEW HOME	NEW HOME, 4 BDRM, 3 CA

BUILDING DETAILS

Model: **2.00 STORY FRAME COLONIAL**
Roof: **GABLE OR HIP/ASPHALT**
Ext: **BR ON MASONRY/VINYL SIDING**
Int: **DRYWALL**
Floor: **HARDWOOD**
Heat: **OIL/FA DUCTED**
Bedrooms: **4** Baths: **2.5** Fixtures: **11**
Extra Kitchens: Fireplaces:
A/C: **Yes 100.00 %** Generators:
Quality: **A3 AVG+30**
Com. Wall:
Size Adj: **0.8696** Base Rate: **RSA 60.00**
Bldg. Rate: **1.1854**
Sq. Foot Cost: **$ 71.13**

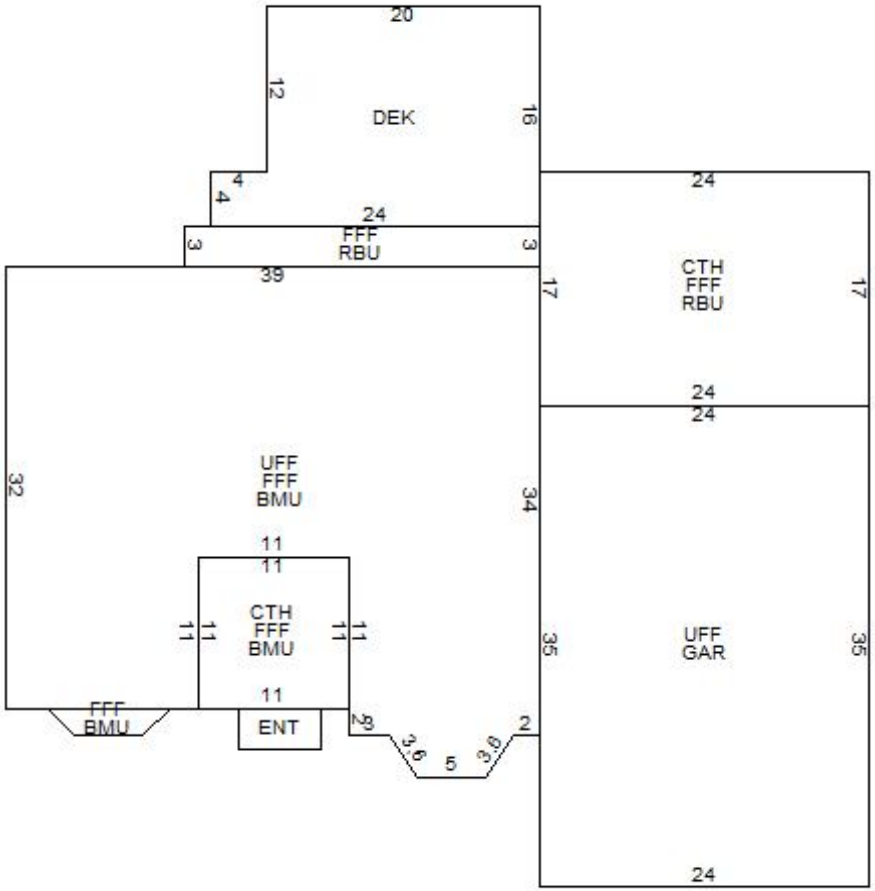

BUILDING SUB AREA DETAILS

ID	Description	Area	Adj.	Effect.
FFF	FST FLR FIN	1797	1.00	1797
UFF	UPPER FLR FIN	2016	1.00	2016
GAR	GARAGE	840	0.45	378
CTH	CATHEDRAL	529	0.10	53
RBU	RAISED BSMNT	486	0.25	122
BMU	BSMNT	1311	0.15	197
ENT	ENTRANCE	18	0.10	2
DEK	DECK/ENTRANCE	336	0.10	34
GLA:	**3,813**	**7,333**		**4,599**

2013 BASE YEAR BUILDING VALUATION

Market Cost New:		**$ 327,127**
Year Built:		**2005**
Condition For Age:	GOOD	**9 %**
Physical:		
Functional:	WH	**1 %**
Economic:		
Temporary:		
Total Depreciation:		**10 %**
Building Value:		**$ 294,400**

OWNER INFORMATION

COSTELLO JEFFREY A
COSTELLO INGA
20 HARVARD AVENUE

AUBURN, NH 03032

SALES HISTORY

Date	Book	Page	Type	Price	Grantor
06/18/2012	5326	1383	Q I	344,933	MARSH, GARY S
05/01/2002	3764	2057	Q I	319,600	ESPANA

PICTURE

LISTING HISTORY

03/22/13	CRVM	
04/25/11	DMPM	
05/20/09	DMVM	
03/04/09	INSP	MARKED FOR INSPECTION
07/19/05	KCUM	
01/06/03	BHCL	
10/30/02	JDRM	

NOTES

WHITE; 4/11 P/U SHED;3/13 NOH-NC;CTH AREA EST

EXTRA FEATURES VALUATION

Feature Type	Units	Lngth x Width	Size Adj	Rate	Cond	Market Value	Notes
FIREPLACE 1-STAND	1		100	3,000.00	100	3,000	GAS FPL INSERT
SHED-WOOD	120	10 x 12	193	3.50	50	405	1/2 SHED/1/2 COOP
						3,400	

MUNICIPAL SOFTWARE BY AVITAR

AUBURN ASSESSING OFFICE

PARCEL TOTAL TAXABLE VALUE

Year	Building	Features	Land
2011	$ 188,100	$ 3,400	$ 165,800
		Parcel Total:	$ 357,300
2013	**$ 170,700**	**$ 3,400**	**$ 159,100**
		Parcel Total:	**$ 333,200**

LAND VALUATION

Zone: RESIDENTIAL 1 & 2 **Minimum Acreage:** 2.00 **Minimum Frontage:** 200 **Site:** AVERAGE **Driveway:** PAVED **Road:** PAVED

Land Type	Units	Base Rate	NC	Adj	Site	Road	DWay	Topography	Cond	Ad Valorem	SPI	R	Tax Value	Notes
1F RES	2.000 ac	144,000	H	130	100	100	100	85 -- MODERATE	100	159,100	0	N	159,100	
1F RES	0.006 ac	x 3,500	X	100					100	0	0	N	0	
	2.006 ac									159,100			**159,100**	

PICTURE

OWNER

COSTELLO JEFFREY A
COSTELLO INGA
20 HARVARD AVENUE

AUBURN, NH 03032

TAXABLE DISTRICTS

District	Percentage

PERMITS

Date	Permit ID	Permit Type	Notes
09/07/10	10-249	SHED	NOT TO EXCEED 120 SQU

BUILDING DETAILS

Model: **2.00 STORY FRAME COLONIAL**
Roof: **GABLE OR HIP/ASPHALT**
Ext: **VINYL SIDING**
Int: **DRYWALL**
Floor: **CARPET/HARDWOOD**
Heat: **GAS/FA DUCTED**
Bedrooms: **4** Baths: **2.5** Fixtures:
Extra Kitchens: Fireplaces:
A/C: **No** Generators:
Quality: **A2 AVG+20**
Com. Wall:
Size Adj: **0.9378** Base Rate: **RSA 60.00**
Bldg. Rate: **1.0918**
Sq. Foot Cost: **$ 65.51**

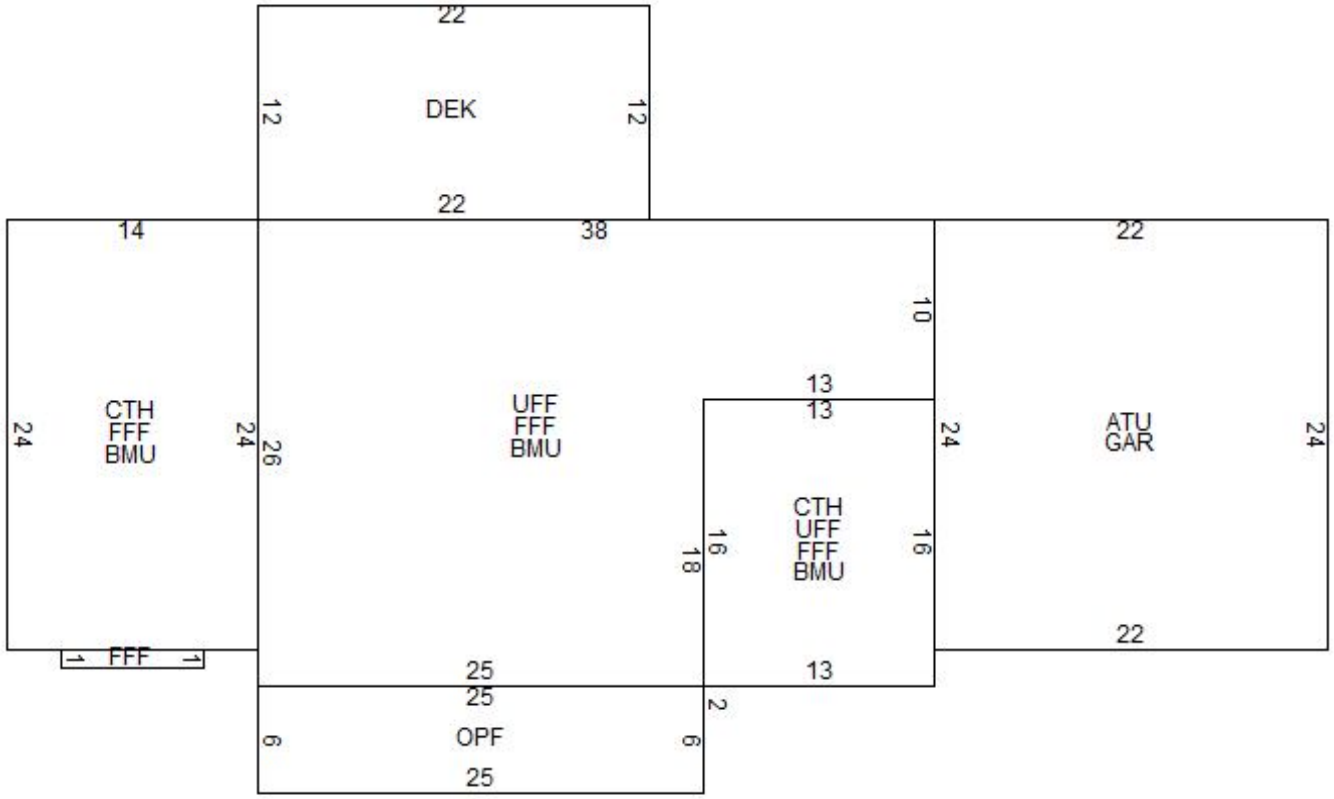

BUILDING SUB AREA DETAILS

ID	Description	Area	Adj.	Effect.
CTH	CATHEDRAL	544	0.10	54
FFF	FST FLR FIN	1332	1.00	1332
BMU	BSMNT	1324	0.15	199
UFF	UPPER FLR FIN	988	1.00	988
OPF	OPEN PORCH	150	0.25	38
ATU	ATTIC	528	0.10	53
GAR	GARAGE	528	0.45	238
DEK	DECK/ENTRANCE	264	0.10	26
GLA:	**2,320**	**5,658**		**2,928**

2013 BASE YEAR BUILDING VALUATION

Market Cost New:		**$ 191,813**
Year Built:		**2001**
Condition For Age:	GOOD	**11 %**
Physical:		
Functional:		
Economic:		
Temporary:		
Total Depreciation:		**11 %**
Building Value:		**$ 170,700**

OWNER INFORMATION

LOPEZ SHANNON L
LOPEZ MICHAEL
11 SONYA DRIVE

AUBURN, NH 03032

SALES HISTORY

Date	Book	Page	Type	Price	Grantor
09/25/2012	5359	1793	Q I	307,933	ESPANA BUILDING &
11/24/2010	5168	1186	U I 37	104,900	FEDERAL HOME
11/05/2010	5162	1495	U I 51	150,000	LOGUE, JOHN C

PICTURE

LISTING HISTORY

03/22/13	CRVM	
03/27/12	DMPM	
04/25/11	DMPL	4-SALE REMAX 622-SALE;
01/11/10	DMPR	
04/10/09	DMPR	
12/20/07	BHPR	
04/10/07	KCPR	
01/11/07	DMPR	

NOTES

CREAM; 3/12 NOH EST HSE IS 100% COMPLETED, REMOVE UC & FLAG;3/13 NOH-NC-WETLANDS DIRECTLY TO REAR OF PROPERTY;

EXTRA FEATURES VALUATION

Feature Type	Units	Lngth x Width	Size Adj	Rate	Cond	Market Value	Notes
FIREPLACE 1-STAND	1		100	3,000.00	100	3,000	
						3,000	

MUNICIPAL SOFTWARE BY AVITAR

AUBURN ASSESSING OFFICE

PARCEL TOTAL TAXABLE VALUE

Year	Building	Features	Land
2011	$ 25,200	$ 14,700	$ 123,500
		Parcel Total:	$ 163,400
2013	**$ 171,800**	**$ 3,000**	**$ 140,000**
		Parcel Total:	**$ 314,800**

LAND VALUATION

Zone: RESIDENTIAL 1 & 2 **Minimum Acreage:** 2.00 **Minimum Frontage:** 200 **Site:** AVERAGE **Driveway:** PAVED **Road:** PAVED

Land Type	Units	Base Rate	NC	Adj	Site	Road	DWay	Topography	Cond	Ad Valorem	SPI	R	Tax Value	Notes
1F RES	1.000 ac	140,000	E	100	100	100	100	100 -- LEVEL	100	140,000	0	N	140,000	
	1.000 ac									140,000			**140,000**	

PICTURE

OWNER

LOPEZ SHANNON L
LOPEZ MICHAEL
11 SONYA DRIVE

AUBURN, NH 03032

TAXABLE DISTRICTS

District	Percentage

PERMITS

Date	Permit ID	Permit Type	Notes
12/28/10	10-401	NEW BUILDING	SUBCONTRACTORS TO SE
12/28/10	10-400	DEMOLITION	DISPOSAL OF MATERIALS
07/29/04	04-273	ADDITION	18X48 ABOVE GRD POOL
09/11/03	03-292b	ADDITION	24X40 GARAGE

BUILDING DETAILS

Model: **2.00 STORY FRAME COLONIAL**
Roof: **GABLE OR HIP/ASPHALT**
Ext: **VINYL SIDING**
Int: **DRYWALL**
Floor: **CARPET/HARDWOOD**
Heat: **GAS/FA DUCTED**
Bedrooms: **3** Baths: **2.5** Fixtures:
Extra Kitchens: Fireplaces:
A/C: **No** Generators:
Quality: **A2 AVG+20**
Com. Wall:
Size Adj: **0.9496** Base Rate: **RSA 60.00**
Bldg. Rate: **1.0944**
Sq. Foot Cost: **$ 65.66**

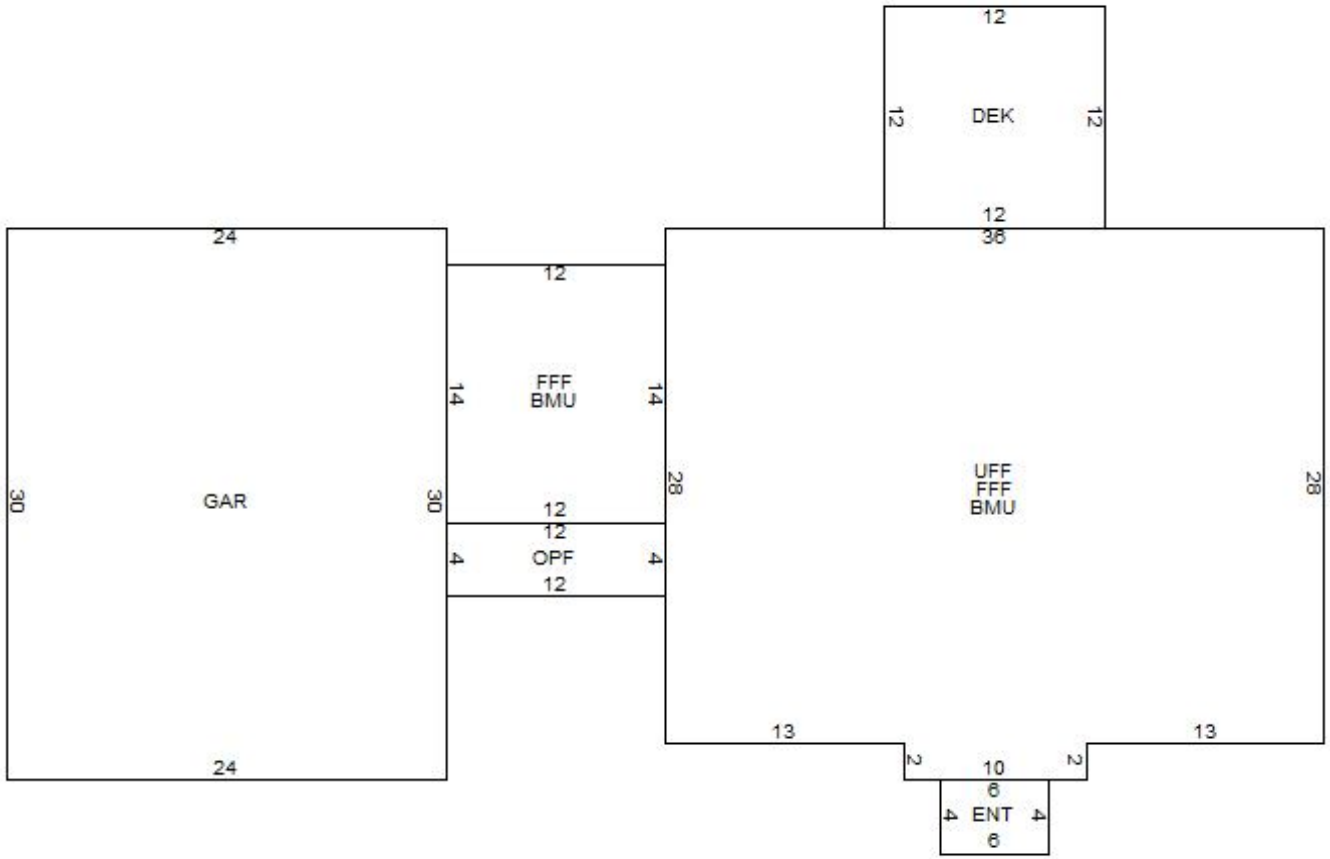

BUILDING SUB AREA DETAILS

ID	Description	Area	Adj.	Effect.
OPF	OPEN PORCH	48	0.25	12
UFF	UPPER FLR FIN	1028	1.00	1028
FFF	FST FLR FIN	1196	1.00	1196
ENT	ENTRANCE	24	0.10	2
DEK	DECK/ENTRANCE	144	0.10	14
BMU	BSMNT	1196	0.15	179
GAR	GARAGE	720	0.45	324
GLA:	**2,224**	**4,356**		**2,755**

2013 BASE YEAR BUILDING VALUATION

Market Cost New:		**$ 180,893**
Year Built:		**2010**
Condition For Age:	AVERAGE	**5 %**
Physical:		
Functional:		
Economic:		
Temporary:		
Total Depreciation:		**5 %**
Building Value:		**$ 171,800**

OWNER INFORMATION

RUSSO, JENNA

332 CHESTER TURNPIKE

AUBURN, NH 03032

SALES HISTORY

Date	Book	Page	Type	Price	Grantor
06/11/2012	5324	432	Q I	325,000	RUSSO, JOHN

PICTURE

LISTING HISTORY

08/04/11	DMVM	
06/15/11	INSP	MARKED FOR INSPECTION
05/25/10	LMHC	
07/06/05	DIUM	
10/31/02	TMRM	

NOTES

TAN; DET DEK ATT TO AGP; 8/11 0NE FPL IS OUTSIDE, ALL INFO FROM H/O AT DOOR DNVI (BAD TIME), REMOVED POOL, CORRECTED FPL & EST CTH, SUMP PUMP;

EXTRA FEATURES VALUATION

Feature Type	Units	Lngth x Width	Size Adj	Rate	Cond	Market Value	Notes
FIREPLACE 2-STAND	1		100	5,000.00	100	5,000	
PATIO	198	11 x 18	141	7.00	30	586	EST/SHAPE
SHED-WOOD	144	12 x 12	171	3.50	75	646	
						6,200	

MUNICIPAL SOFTWARE BY AVITAR

AUBURN ASSESSING OFFICE

PARCEL TOTAL TAXABLE VALUE

Year	Building	Features	Land
2011	$ 180,500	$ 6,200	$ 149,900
		Parcel Total:	$ 336,600
2013	**$ 161,100**	**$ 6,200**	**$ 164,600**
		Parcel Total:	**$ 331,900**

LAND VALUATION

Zone: RESIDENTIAL 1 & 2 **Minimum Acreage:** 2.00 **Minimum Frontage:** 200 **Site:** AVERAGE **Driveway:** PAVED **Road:** PAVED

Land Type	Units	Base Rate	NC	Adj	Site	Road	DWay	Topography	Cond	Ad Valorem	SPI	R	Tax Value	Notes
1F RES	2.000 ac	144,000	F	105	100	100	100	100 -- LEVEL	100	151,200	0	N	151,200	
1F RES	4.033 ac	x 3,500	X	100				95 -- MILD	100	13,400	0	N	13,400	
	6.033 ac									164,600			**164,600**	

PICTURE

OWNER

RUSSO, JENNA

332 CHESTER TURNPIKE

AUBURN, NH 03032

TAXABLE DISTRICTS

District	Percentage

PERMITS

Date	Permit ID	Permit Type	Notes

BUILDING DETAILS

Model: **1.75 STORY FRAME CAPE**
Roof: **GABLE OR HIP/ASPHALT**
Ext: **CEDAR/REDWD**
Int: **DRYWALL**
Floor: **PERGO/LAMINATE/HARDWOOD**
Heat: **OIL/HOT WATER**
Bedrooms: **3** Baths: **1.5** Fixtures: **6**
Extra Kitchens: Fireplaces:
A/C: **No** Generators:
Quality: **A1 AVG+10**
Com. Wall:
Size Adj: **0.9163** Base Rate: **RSA 60.00**
Bldg. Rate: **0.9779**
Sq. Foot Cost: **$ 58.67**

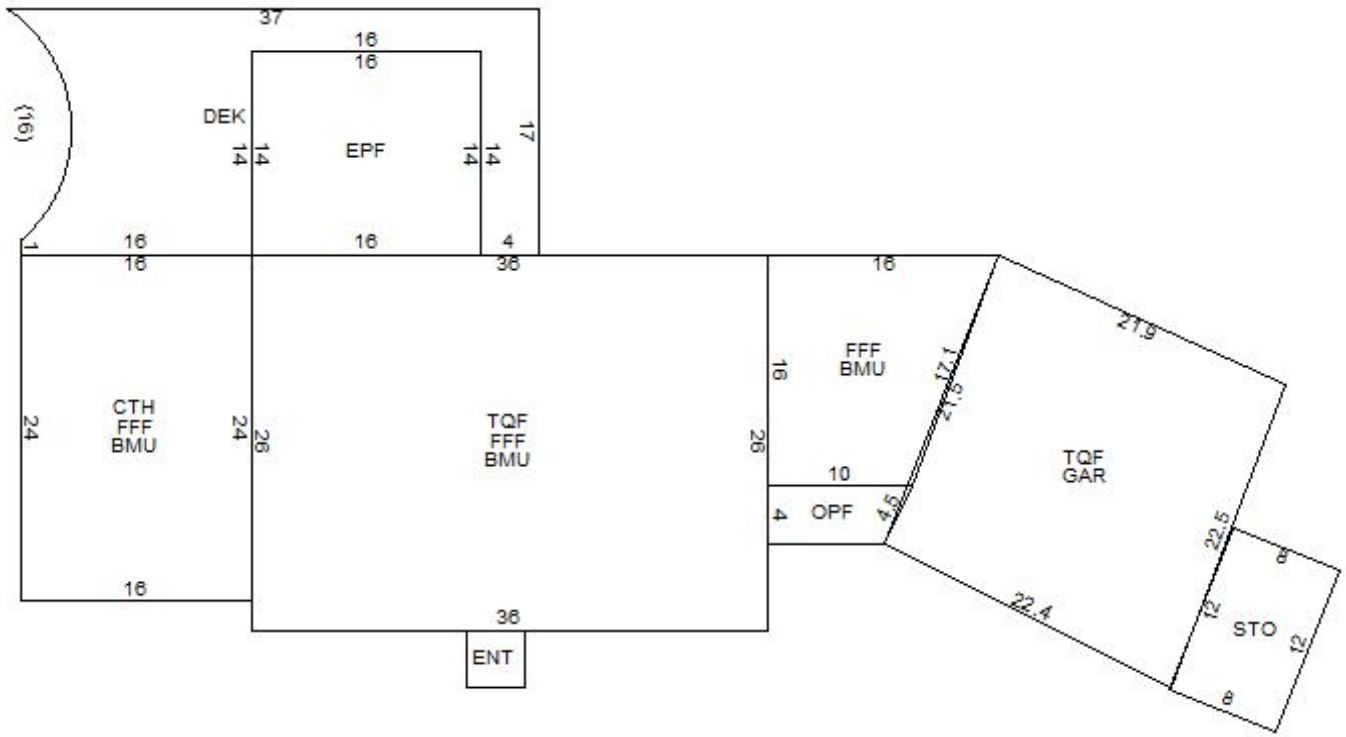

BUILDING SUB AREA DETAILS

ID	Description	Area	Adj.	Effect.
TQF	3/4 STRY FIN	1422	0.75	1067
OPF	OPEN PORCH	36	0.25	9
CTH	CATHEDRAL	384	0.10	38
DEK	DECK/ENTRANCE	351	0.10	35
STO	STORAGE AREA	96	0.25	24
ENT	ENTRANCE	16	0.10	2
EPF	ENCLSD PORCH	224	0.70	157
FFF	FST FLR FIN	1528	1.00	1528
BMU	BSMNT	1528	0.15	229
GAR	GARAGE	486	0.45	219
GLA:	**2,595**	**6,071**		**3,308**

2013 BASE YEAR BUILDING VALUATION

Market Cost New:		**$ 194,080**
Year Built:		**1984**
Condition For Age:	GOOD	**17 %**
Physical:		
Functional:		
Economic:		
Temporary:		
Total Depreciation:		**17 %**
Building Value:		**$ 161,100**

OWNER INFORMATION

DAVIS JON & SANDRA TRUSTEES OF
THE JON DAVIS FAMILY TRUST
24 GROVE CT

AUBURN, NH 03032

SALES HISTORY

Date	Book	Page	Type	Price	Grantor
07/27/2012	5339	1270	Q I	355,000	VALBONA, STEVEN M
11/21/2011	5263	2896	U I 44	40	VALBONA, STEVEN A
06/10/2003	4064	2249	Q I	370,000	GERHOLD, RANDALL

PICTURE

LISTING HISTORY

03/22/13	CRVL	
08/05/11	DMVM	
06/15/11	INSP	MARKED FOR INSPECTION
10/16/07	KMVL	
10/03/07	INSP	MARKED FOR INSPECTION
10/23/02	TMRL	

NOTES

GRAY; 2-FIX DWN STAIRS BTH; JACUZZI = HOT TUB IN FEATURES DNPU;10/07 BTH=1 2FIX 1 4FIX 1 5FIX; DNPU CANVAS TENT OVER DEK=N/V;3/13 NC; KIT=OAK/LAM;

EXTRA FEATURES VALUATION

Feature Type	Units	Lngth x Width	Size Adj	Rate	Cond	Market Value	Notes
FIREPLACE 1-STAND	1		100	3,000.00	100	3,000	WOOD
PATIO	380	20 x 19	102	7.00	60	1,628	ATT TO HSE
CRICKET COMMON	1		100	5,000.00	100	5,000	
						9,600	

MUNICIPAL SOFTWARE BY AVITAR.

AUBURN ASSESSING OFFICE

PARCEL TOTAL TAXABLE VALUE

Year	Building	Features	Land
2011	$ 206,800	$ 9,600	$ 182,400
		Parcel Total:	$ 398,800
2013	**$ 189,400**	**$ 9,600**	**$ 193,400**
		Parcel Total:	**$ 392,400**

LAND VALUATION

Zone: RURAL **Minimum Acreage:** 3.00 **Minimum Frontage:** 300 **Site:** VERY GOOD **Driveway:** PAVED **Road:** PAVED

Land Type	Units	Base Rate	NC	Adj	Site	Road	DWay	Topography	Cond	Ad Valorem	SPI	R	Tax Value	Notes
1F RES	2.630 ac	146,520	G	120	110	100	100	100 -- LEVEL	100	193,400	0	N	193,400	
	2.630 ac									193,400			**193,400**	

PICTURE

OWNER

DAVIS JON & SANDRA TRUSTEES OF
THE JON DAVIS FAMILY TRUST
24 GROVE CT

AUBURN, NH 03032

TAXABLE DISTRICTS

District	Percentage

PERMITS

Date	Permit ID	Permit Type	Notes
10/03/12	12-447	FIREPLACE	NFPA 211 STANDARDS

BUILDING DETAILS

Model: **2.00 STORY FRAME COLONIAL**
Roof: **GABLE OR HIP/ASPHALT**
Ext: **VINYL SIDING**
Int: **DRYWALL**
Floor: **CARPET/HARDWOOD**
Heat: **OIL/FA DUCTED**
Bedrooms: **4** Baths: **2.5** Fixtures: **11**
Extra Kitchens: Fireplaces:
A/C: **Yes 100.00 %** Generators:
Quality: **A2 AVG+20**
Com. Wall:
Size Adj: **0.9232** Base Rate: **RSA 60.00**
Bldg. Rate: **1.1291**
Sq. Foot Cost: **$ 67.75**

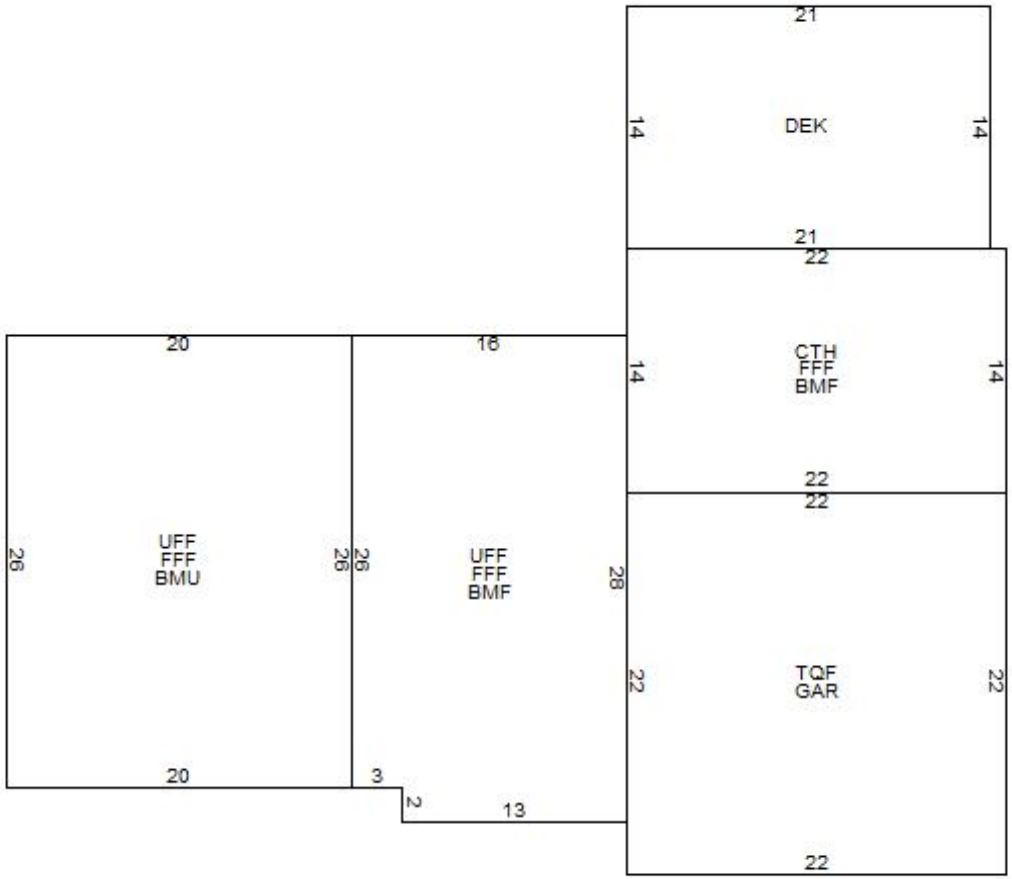

BUILDING SUB AREA DETAILS

ID	Description	Area	Adj.	Effect.
BMU	BSMNT	520	0.15	78
GAR	GARAGE	484	0.45	218
TQF	3/4 STRY FIN	484	0.75	363
CTH	CATHEDRAL	308	0.10	31
DEK	DECK/ENTRANCE	294	0.10	29
BMF	BSMNT FINISHED	750	0.30	225
UFF	UPPER FLR FIN	962	1.00	962
FFF	FST FLR FIN	1270	1.00	1270
GLA:	**2,595**	**5,072**		**3,176**

2013 BASE YEAR BUILDING VALUATION

Market Cost New:		**$ 215,174**
Year Built:		**1998**
Condition For Age:	GOOD	**12 %**
Physical:		
Functional:		
Economic:		
Temporary:		
Total Depreciation:		**12 %**
Building Value:		**$ 189,400**

OWNER INFORMATION

LANGLOIS PETER & MAUREEN,
HIGGINS MICHAEL H & JANICE E T
29 SAGHARBOR DRIVE

AUBURN, NH 03032

SALES HISTORY

Date	Book	Page	Type	Price	Grantor
11/08/2012	5376	666	U I 44	40	LANGLOIS PETER
01/27/2012	5283	1208	Q I	235,000	WHITTEMORE CAROL
06/18/2008	4927	1617	U I 39		WHITTEMORE PAUL J

PICTURE

LISTING HISTORY

03/22/13	CRVM	
03/09/12	DMVM	
01/30/12	INSP	MARKED FOR INSPECTION
12/21/05	JDUM	
10/08/02	TMRL	

NOTES

GRN; BMU HAS DRYWALL ON WALLS;3/12 NOH P/U PATIO;3/13 NOH-DNPU ENTRY WAY PATIO=NV, KIT=OAK/LAM NOT ABV AVG DETAILS; 5/13 BMF FROM MLS

EXTRA FEATURES VALUATION

Feature Type	Units	Lngth x Width	Size Adj	Rate	Cond	Market Value	Notes
PATIO	144	12 x 12	171	7.00	50	862	
						900	

MUNICIPAL SOFTWARE BY AVITAR

AUBURN ASSESSING OFFICE

PARCEL TOTAL TAXABLE VALUE

Year	Building	Features	Land
2011	$ 136,000	$ 0	$ 149,100
		Parcel Total:	$ 285,100
2013	**$ 106,800**	**$ 900**	**$ 151,800**
		Parcel Total:	**$ 259,500**

LAND VALUATION

Zone: RESIDENTIAL 1 & 2 **Minimum Acreage:** 2.00 **Minimum Frontage:** 200 **Site:** AVERAGE **Driveway:** PAVED **Road:** PAVED

Land Type	Units	Base Rate	NC	Adj	Site	Road	DWay	Topography	Cond	Ad Valorem	SPI	R	Tax Value	Notes
1F RES	2.000 ac	144,000	F	105	100	100	100	100 -- LEVEL	100	151,200	0	N	151,200	
1F RES	0.177 ac	x 3,500	X	100				95 -- MILD	100	600	0	N	600	
	2.177 ac									151,800			**151,800**	

Map: 000011 Lot: 000037 Sub: 0001-6 Card: 1 of 1 0029 SAGHARBOR DRIVE AUBURN Printed: 07/11/2013

PICTURE

OWNER

LANGLOIS PETER & MAUREEN,
HIGGINS MICHAEL H & JANICE E T
29 SAGHARBOR DRIVE

AUBURN, NH 03032

TAXABLE DISTRICTS

District	Percentage

PERMITS

Date	Permit ID	Permit Type	Notes
04/25/05	05-136	ADDITION	12 X 18 SUNROOM, STRUC

BUILDING DETAILS

Model: **1.75 STORY FRAME CAPE**
Roof: **GABLE OR HIP/ASPHALT**
Ext: **CEDAR/REDWD**
Int: **DRYWALL**
Floor: **CARPET/LINOLEUM/VINYL**
Heat: **OIL/FA DUCTED**
Bedrooms: **3** Baths: **1.5** Fixtures:
Extra Kitchens: Fireplaces:
A/C: **Yes 100.00 %** Generators:
Quality: **A0 AVG**
Com. Wall:
Size Adj: **0.9962** Base Rate: **RSA 60.00**
Bldg. Rate: **0.9958**
Sq. Foot Cost: **$ 59.75**

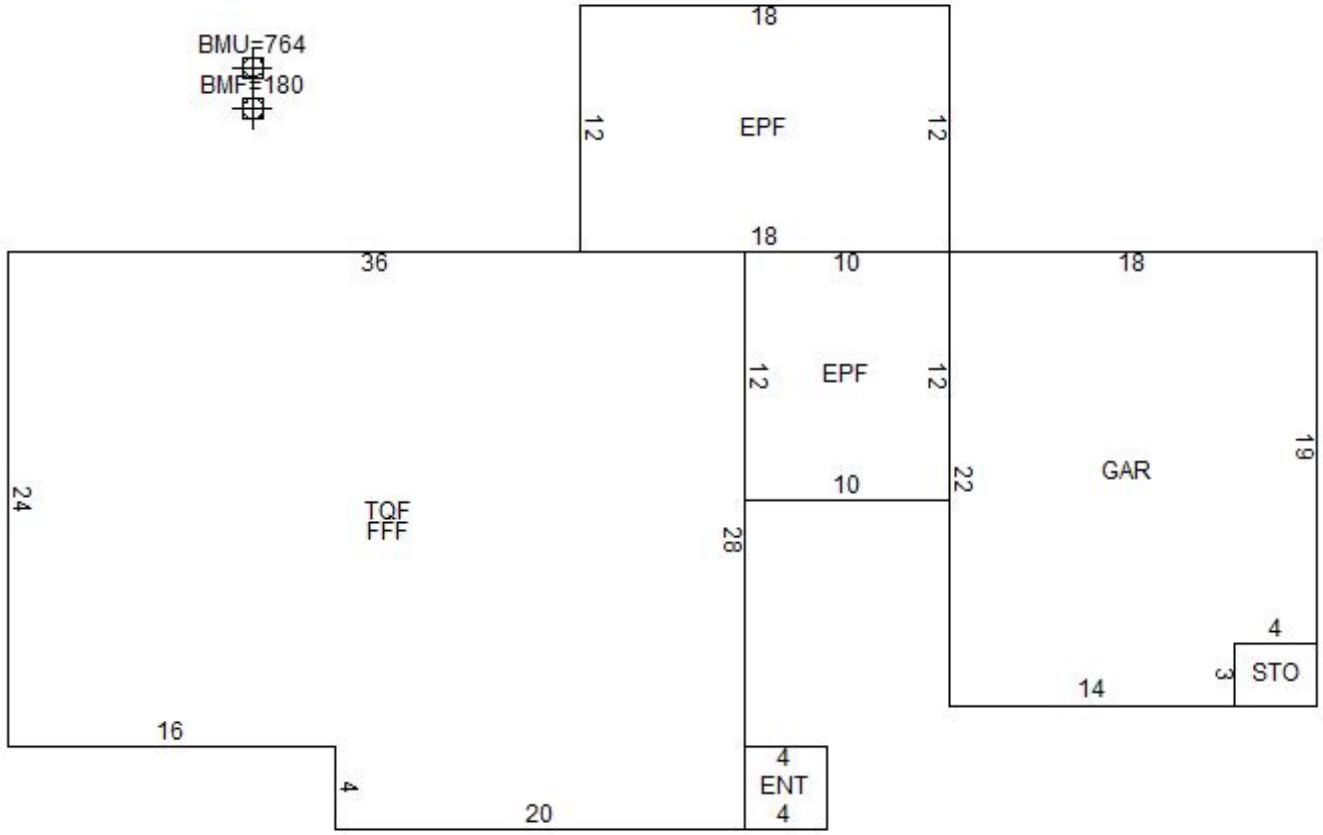

BUILDING SUB AREA DETAILS

ID	Description	Area	Adj.	Effect.
TQF	3/4 STRY FIN	944	0.75	708
FFF	FST FLR FIN	944	1.00	944
EPF	ENCLSD PORCH	336	0.70	235
GAR	GARAGE	384	0.45	173
STO	STORAGE AREA	12	0.25	3
ENT	ENTRANCE	16	0.10	2
BMU	BSMNT	764	0.15	115
BMF	BSMNT FINISHED	180	0.30	54
GLA:	**1,652**	**3,580**		**2,234**

2013 BASE YEAR BUILDING VALUATION

Market Cost New:		**$ 133,482**
Year Built:		**1987**
Condition For Age:	AVERAGE	**20 %**
Physical:		
Functional:		
Economic:		
Temporary:		
Total Depreciation:		**20 %**
Building Value:		**$ 106,800**

OWNER INFORMATION

MARTIN VINYARD CRYSTAL M
MARTIN RICHARD L
8 SPRUCE LANE

AUBURN, NH 03032

SALES HISTORY

Date	Book	Page	Type	Price	Grantor
09/28/2012	5361	476	U I 44		MARTIN VINYARD
09/17/2012	5356	2404	Q I	248,066	HOLT, CHRISTOPHER
07/18/2002	3802	1274	Q I	220,900	ALDRIDGE, JACOB

PICTURE

LISTING HISTORY

03/22/13	CRVM	
06/26/09	DMVL	
03/04/09	INSP	MARKED FOR INSPECTION
03/29/05	KMPL	
07/14/03	BHHC	
04/30/03	CMCL	
10/11/02	TMRM	

NOTES

BEIGE; FULL DORMER ON REAR OF HSE; IACA; NEW SIDING; 3/13 NOH-NC, DNPU CHILD'S PLAYHSE/DECK, POSSIBLY A DUG WELL;

EXTRA FEATURES VALUATION

Feature Type	Units	Lngth x Width	Size Adj	Rate	Cond	Market Value	Notes
FIREPLACE 1-STAND	1		100	3,000.00	100	3,000	
						3,000	

MUNICIPAL SOFTWARE BY AVITAR

AUBURN ASSESSING OFFICE

PARCEL TOTAL TAXABLE VALUE

Year	Building	Features	Land
2011	$ 125,700	$ 3,000	$ 142,500
		Parcel Total:	$ 271,200
2013	**$ 101,900**	**$ 3,000**	**$ 144,700**
		Parcel Total:	**$ 249,600**

LAND VALUATION

Zone: RESIDENTIAL 1 & 2 **Minimum Acreage:** 2.00 **Minimum Frontage:** 200 **Site:** AVERAGE **Driveway:** PAVED **Road:** PAVED

Land Type	Units	Base Rate	NC	Adj	Site	Road	DWay	Topography	Cond	Ad Valorem	SPI	R	Tax Value	Notes
1F RES	2.000 ac	144,000	F	105	100	100	100	95 -- MILD	100	143,600	0	N	143,600	
1F RES	0.325 ac	x 3,500	X	100				95 -- MILD	100	1,100	0	N	1,100	
	2.325 ac									144,700			**144,700**	

PICTURE

OWNER

MARTIN VINYARD CRYSTAL M
MARTIN RICHARD L
8 SPRUCE LANE

AUBURN, NH 03032

TAXABLE DISTRICTS

District	Percentage

PERMITS

Date	Permit ID	Permit Type	Notes
09/28/04	04-460	ADDITION	14'X32' DECK

BUILDING DETAILS

Model: **2.00 STORY FRAME GAMBREL**
Roof: **GAMBREL/ASPHALT**
Ext: **VINYL SIDING**
Int: **DRYWALL**
Floor: **CARPET/HARD TILE**
Heat: **OIL/HOT WATER**
Bedrooms: **3** Baths: **1.5** Fixtures: **5**
Extra Kitchens: Fireplaces:
A/C: **No** Generators:
Quality: **A0 AVG**
Com. Wall:
Size Adj: **1.0139** Base Rate: **RSA 60.00**
Bldg. Rate: **0.9936**
Sq. Foot Cost: **$ 59.62**

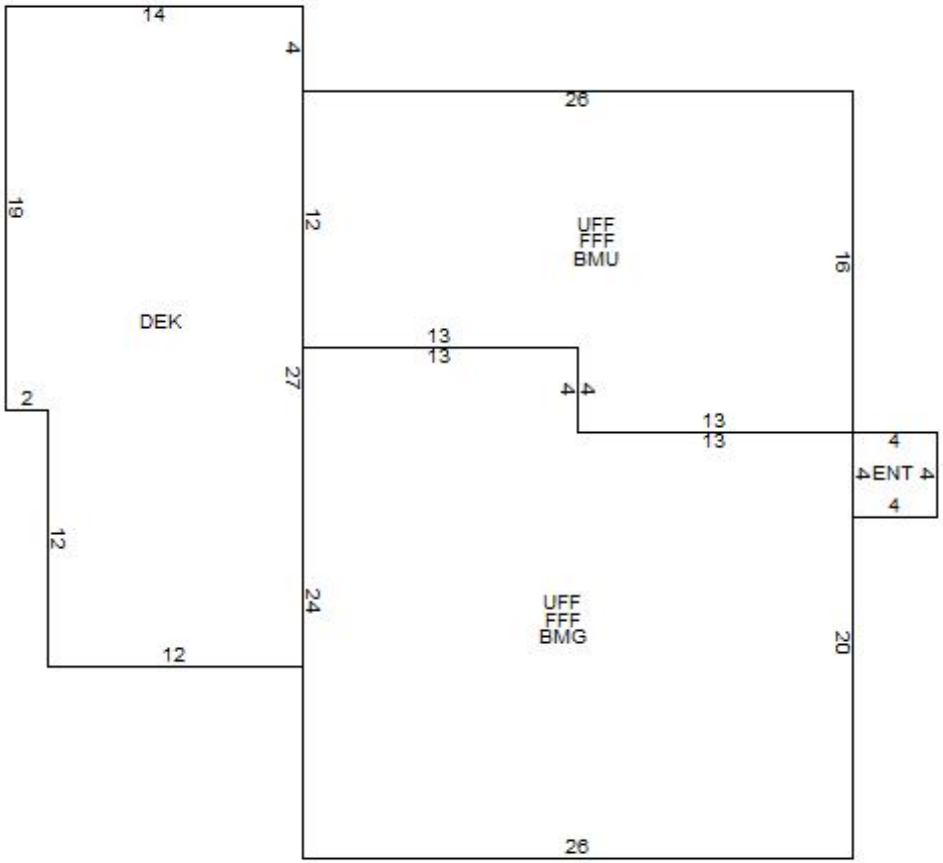

BUILDING SUB AREA DETAILS

ID	Description	Area	Adj.	Effect.
DEK	DECK/ENTRANCE	410	0.10	41
FFF	FST FLR FIN	936	1.00	936
UFF	UPPER FLR FIN	936	1.00	936
ENT	ENTRANCE	16	0.10	2
BMG	BASEMENT	572	0.20	114
BMU	BSMNT	364	0.15	55
GLA:	**1,872**	**3,234**		**2,084**

2013 BASE YEAR BUILDING VALUATION

Market Cost New:		**$ 124,248**
Year Built:		**1985**
Condition For Age:	GOOD	**17 %**
Physical:		
Functional:	WH - UFF	**1 %**
Economic:		
Temporary:		
Total Depreciation:		**18 %**
Building Value:		**$ 101,900**

OWNER INFORMATION

PAYAN FRITZ M
PAYAN AMY M
65 STONEY BROOK LANE

AUBURN, NH 03032

SALES HISTORY

Date	Book	Page	Type	Price	Grantor
12/17/2012	5389	1155	Q I	286,000	BONNIER, JAMES A

PICTURE

LISTING HISTORY

03/22/13	CRVX	
01/22/10	BHVM	
01/11/10	INSP	MARKED FOR INSPECTION
03/29/05	KMPM	
10/08/02	TMRL	

NOTES

TAN;3/13 SPOKE W/OWNER ON WAY OUT, ANS SOME Q'S - HAD TO LEAVE DID NOT WANT MEAS;

EXTRA FEATURES VALUATION

Feature Type	Units	Lngth x Width	Size Adj	Rate	Cond	Market Value	Notes
SHED-WOOD	140	14 x 10	174	3.50	80	682	
						700	

MUNICIPAL SOFTWARE BY AVITAR

AUBURN ASSESSING OFFICE

PARCEL TOTAL TAXABLE VALUE

Year	Building	Features	Land
2011	$ 143,500	$ 700	$ 141,800
		Parcel Total:	$ 286,000
2013	**$ 132,800**	**$ 700**	**$ 151,200**
		Parcel Total:	**$ 284,700**

LAND VALUATION

Zone: RESIDENTIAL 1 & 2 **Minimum Acreage:** 2.00 **Minimum Frontage:** 200 **Site:** AVERAGE **Driveway:** PAVED **Road:** PAVED

Land Type	Units	Base Rate	NC	Adj	Site	Road	DWay	Topography	Cond	Ad Valorem	SPI	R	Tax Value	Notes
1F RES	2.000 ac	144,000	F	105	100	100	100	100 -- LEVEL	100	151,200	0	N	151,200	
	2.000 ac									151,200			**151,200**	

PICTURE

OWNER

PAYAN FRITZ M
PAYAN AMY M
65 STONEY BROOK LANE

AUBURN, NH 03032

TAXABLE DISTRICTS

District	Percentage

PERMITS

Date	Permit ID	Permit Type	Notes
11/18/04	04-530	SHED	10 X 14 SHED, NO ELECTR

BUILDING DETAILS

Model: **2.00 STORY FRAME COLONIAL**
Roof: **GABLE OR HIP/ASPHALT**
Ext: **VINYL SIDING**
Int: **DRYWALL**
Floor: **CARPET/LINOLEUM/VINYL**
Heat: **OIL/HOT WATER**
Bedrooms: **4** Baths: **3.0** Fixtures:
Extra Kitchens: Fireplaces:
A/C: **No** Generators:
Quality: **A1 AVG+10**
Com. Wall:
Size Adj: **0.9783** Base Rate: **RSA 60.00**
Bldg. Rate: **1.0441**
Sq. Foot Cost: **$ 62.64**

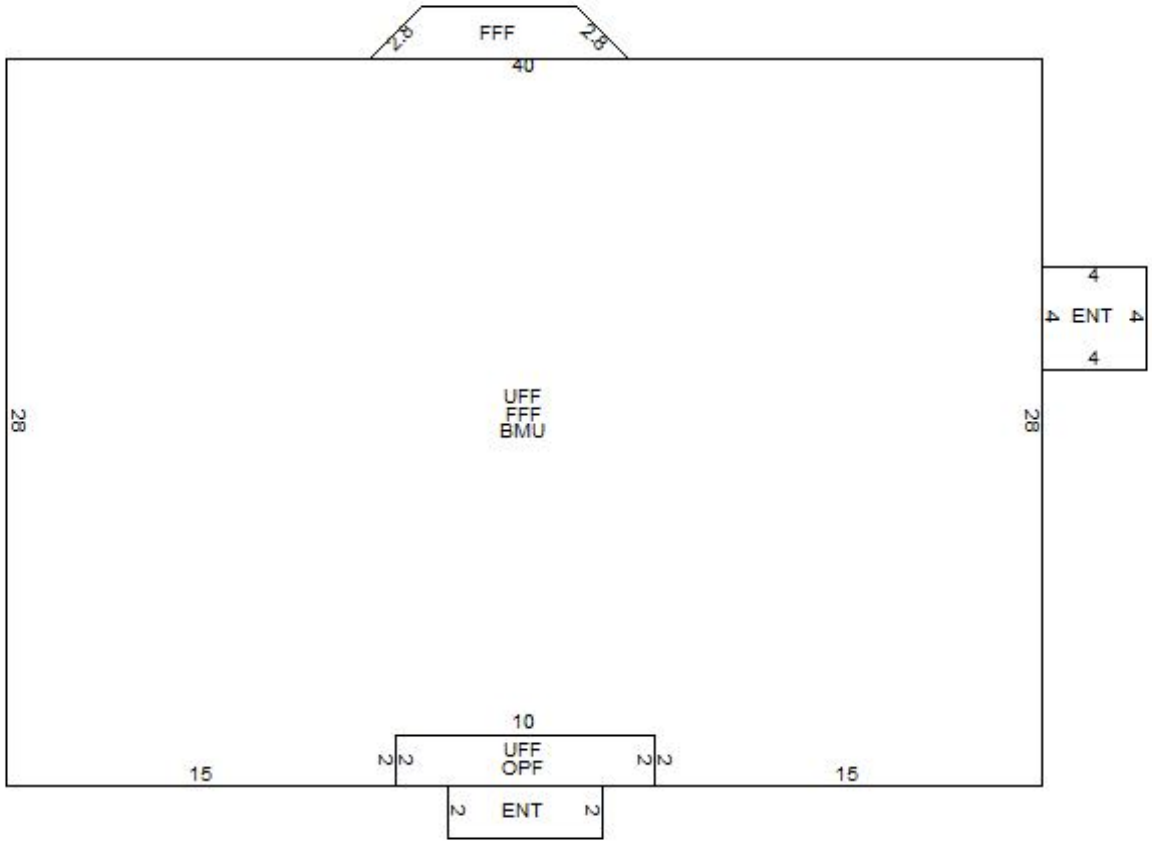

BUILDING SUB AREA DETAILS

ID	Description	Area	Adj.	Effect.
ENT	ENTRANCE	28	0.10	3
OPF	OPEN PORCH	20	0.25	5
UFF	UPPER FLR FIN	1120	1.00	1120
BMU	BSMNT	1100	0.15	165
FFF	FST FLR FIN	1116	1.00	1116
GLA:	**2,236**	**3,384**		**2,409**

2013 BASE YEAR BUILDING VALUATION

Market Cost New:		**$ 150,900**
Year Built:		**1995**
Condition For Age:	GOOD	**12 %**
Physical:		
Functional:		
Economic:		
Temporary:		
Total Depreciation:		**12 %**
Building Value:		**$ 132,800**

OWNER INFORMATION

MORRISSETTE DIANE M
MORRISSETE SCOTT A
24 JAMES DRIVE

AUBURN, NH 03032

SALES HISTORY

Date	Book	Page	Type	Price	Grantor
01/30/2012	5283	2149	Q I	312,533	VOSSLER, GEORGE C
03/02/2004	4247	453	U I 38	40	VOSSLER GEORGE C

PICTURE

LISTING HISTORY

03/22/13	CRVM	
01/26/10	DMVL	
01/11/10	INSP	MARKED FOR INSPECTION
10/06/08	BHCM	
04/12/04	DWP	
10/07/02	JDRL	

NOTES

TAN; 1ST FLR=OIL/FHW; 2ND FLR=ELEC/RAD ELEC; HEAVY RAIN& SEASONAL H20 IN BMU; SOME MINOR CRACKS IN FNDTN; CHMNEY FOR WDSTV; SOME PERGO FLRS; 8X8 DET DEK HAS HOT TUB; 1/10 CORRECTED SIZE OF BMF; NO FPL;3/13 BMF=FLR/WALLS/HEAT;

EXTRA FEATURES VALUATION

Feature Type	Units	Lngth x Width	Size Adj	Rate	Cond	Market Value	Notes
DECK	64	8 x 8	310	7.00	20	278	
POOL-INGRND-VINYL	480	16 x 30	93	28.00	70	8,749	KIDNEY SHAPE
						9,000	

MUNICIPAL SOFTWARE BY AVITAR

AUBURN ASSESSING OFFICE

PARCEL TOTAL TAXABLE VALUE

Year	Building	Features	Land
2011	$ 147,300	$ 800	$ 176,900
		Parcel Total:	$ 325,000
2013	**$ 131,500**	**$ 9,000**	**$ 183,500**
		Parcel Total:	**$ 324,000**

LAND VALUATION

Zone: RESIDENTIAL 1 & 2 **Minimum Acreage:** 2.00 **Minimum Frontage:** 200 **Site:** AVERAGE **Driveway:** PAVED **Road:** PAVED

Land Type	Units	Base Rate	NC	Adj	Site	Road	DWay	Topography	Cond	Ad Valorem	SPI	R	Tax Value	Notes
1F RES	2.000 ac	144,000	G	120	100	100	100	100 -- LEVEL	100	172,800	0	N	172,800	
1F RES	3.389 ac	x 3,500	X	100				90 -- ROLLING	100	10,700	0	N	10,700	
	5.389 ac									183,500			**183,500**	

PICTURE

OWNER

MORRISSETTE DIANE M
MORRISSETE SCOTT A
24 JAMES DRIVE

AUBURN, NH 03032

TAXABLE DISTRICTS

District	Percentage

PERMITS

Date	Permit ID	Permit Type	Notes
04/18/12	12-142	POOL	ELECTRICAL PERMIT ANI

BUILDING DETAILS

Model: **2.00 STORY FRAME COLONIAL**
Roof: **GABLE OR HIP/ASPHALT**
Ext: **CEDAR/REDWD**
Int: **DRYWALL**
Floor: **CARPET/LINOLEUM/VINYL**
Heat: **OIL/HOT WATER**
Bedrooms: **3** Baths: **1.5** Fixtures: **5**
Extra Kitchens: Fireplaces:
A/C: **No** Generators:
Quality: **A1 AVG+10**
Com. Wall:
Size Adj: **0.9616** Base Rate: **RSA 60.00**
Bldg. Rate: **1.0159**
Sq. Foot Cost: **$ 60.95**

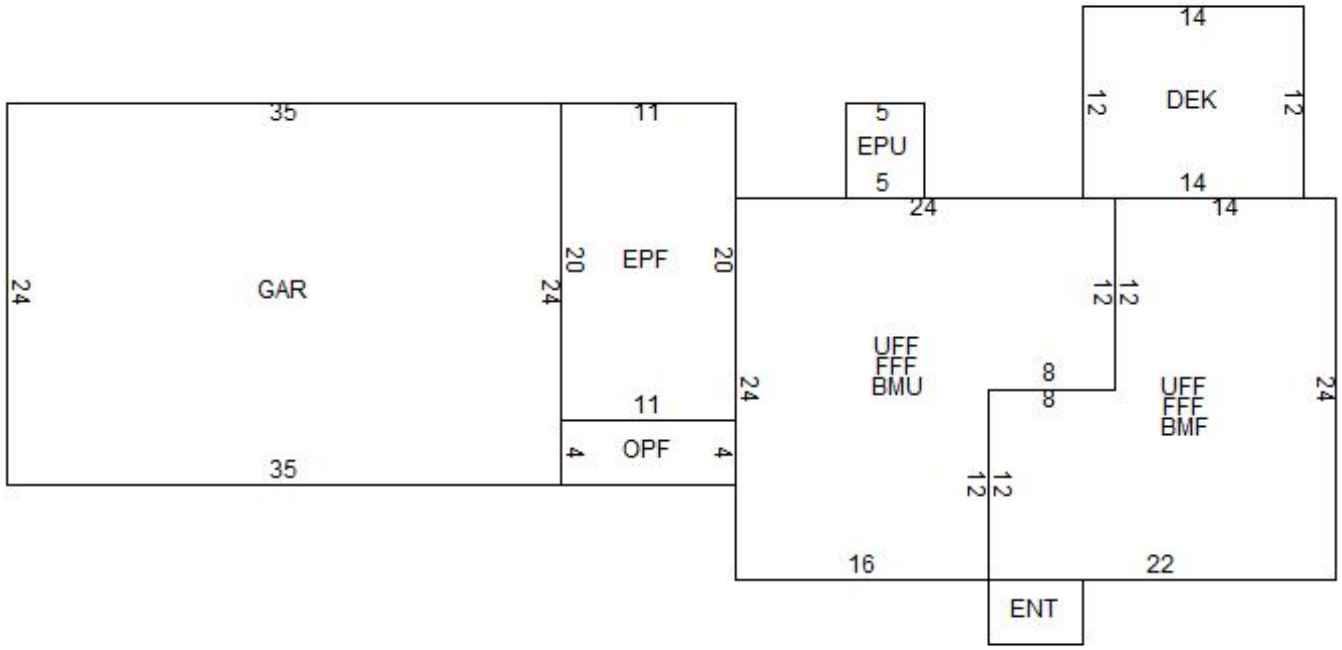

BUILDING SUB AREA DETAILS

ID	Description	Area	Adj.	Effect.
ENT	ENTRANCE	24	0.10	2
GAR	GARAGE	840	0.45	378
OPF	OPEN PORCH	44	0.25	11
EPF	ENCLSD PORCH	220	0.70	154
UFF	UPPER FLR FIN	912	1.00	912
FFF	FST FLR FIN	912	1.00	912
BMU	BSMNT	480	0.15	72
BMF	BSMNT FINISHED	432	0.30	130
DEK	DECK/ENTRANCE	168	0.10	17
EPU	COVERED	30	0.35	11
GLA:	**1,824**	**4,062**		**2,599**

2013 BASE YEAR BUILDING VALUATION

Market Cost New:		**$ 158,409**
Year Built:		**1984**
Condition For Age:	GOOD	**17 %**
Physical:		
Functional:		
Economic:		
Temporary:		
Total Depreciation:		**17 %**
Building Value:		**$ 131,500**

OWNER INFORMATION

CARREAU MARIANNE

243 OLD CANDIA ROAD

AUBURN, NH 03032

SALES HISTORY

Date	Book	Page	Type	Price	Grantor
10/17/2012	5368	556	Q I	309,200	ADELPHI HOMES INC
03/11/2011	5200	1931	U V 49	130,000	SWEENEY, JOAN

PICTURE

LISTING HISTORY

06/30/13	LMHC
04/04/13	DMPM
05/24/10	LMHC
04/10/10	LMUL
11/11/02	TMRL

NOTES

TAN; FF RISES UP FROM ROAD; 4/13 P/U NEW HSE/NOH EST INT & EST HSE IS 100% COMPLETED;

EXTRA FEATURES VALUATION

Feature Type	Units	Lngth x Width	Size Adj	Rate	Cond	Market Value	Notes
FIREPLACE 1-STAND	1		100	3,000.00	100	3,000	
						3,000	

MUNICIPAL SOFTWARE BY AVITAR

AUBURN ASSESSING OFFICE

PARCEL TOTAL TAXABLE VALUE

Year	Building	Features	Land
2011	$ 0	$ 0	$ 109,100
		Parcel Total:	$ 109,100
2013	**$ 174,000**	**$ 3,000**	**$ 136,900**
		Parcel Total:	**$ 313,900**

LAND VALUATION

Zone: COMMERCIAL 1 & 2 **Minimum Acreage:** 2.00 **Minimum Frontage:** 200 **Site:** AVERAGE **Driveway:** PAVED **Road:** PAVED

Land Type	Units	Base Rate	NC	Adj	Site	Road	DWay	Topography	Cond	Ad Valorem	SPI	R	Tax Value	Notes
1F RES	2.000 ac	144,000	E	100	100	100	100	95 -- MILD	100	136,800	0	N	136,800	MPU
1F RES	0.040 ac	x 3,500	X	100				95 -- MILD	100	100	0	N	100	
	2.040 ac									136,900			**136,900**	

PICTURE

OWNER

CARREAU MARIANNE

243 OLD CANDIA ROAD

AUBURN, NH 03032

TAXABLE DISTRICTS

District	Percentage

PERMITS

Date	Permit ID	Permit Type	Notes
07/16/12	12-299	NEW HOME	NOT TO EXCEED 4 BEDROOM
05/17/12	12-202	NEW HOME	VARIANCE GRANTED FOR SI

BUILDING DETAILS

Model: **2.50 STORY FRAME COLONIAL**
Roof: **GABLE OR HIP/ASPHALT**
Ext: **VINYL SIDING**
Int: **DRYWALL**
Floor: **HARDWOOD**
Heat: **GAS/FA DUCTED**
Bedrooms: **4** Baths: **2.5** Fixtures:
Extra Kitchens: Fireplaces:
A/C: **Yes 100.00 %** Generators: **1**
Quality: **A1 AVG+10**
Com. Wall:
Size Adj: **0.9498** Base Rate: **RSA 60.00**
Bldg. Rate: **1.0751**
Sq. Foot Cost: **$ 64.50**

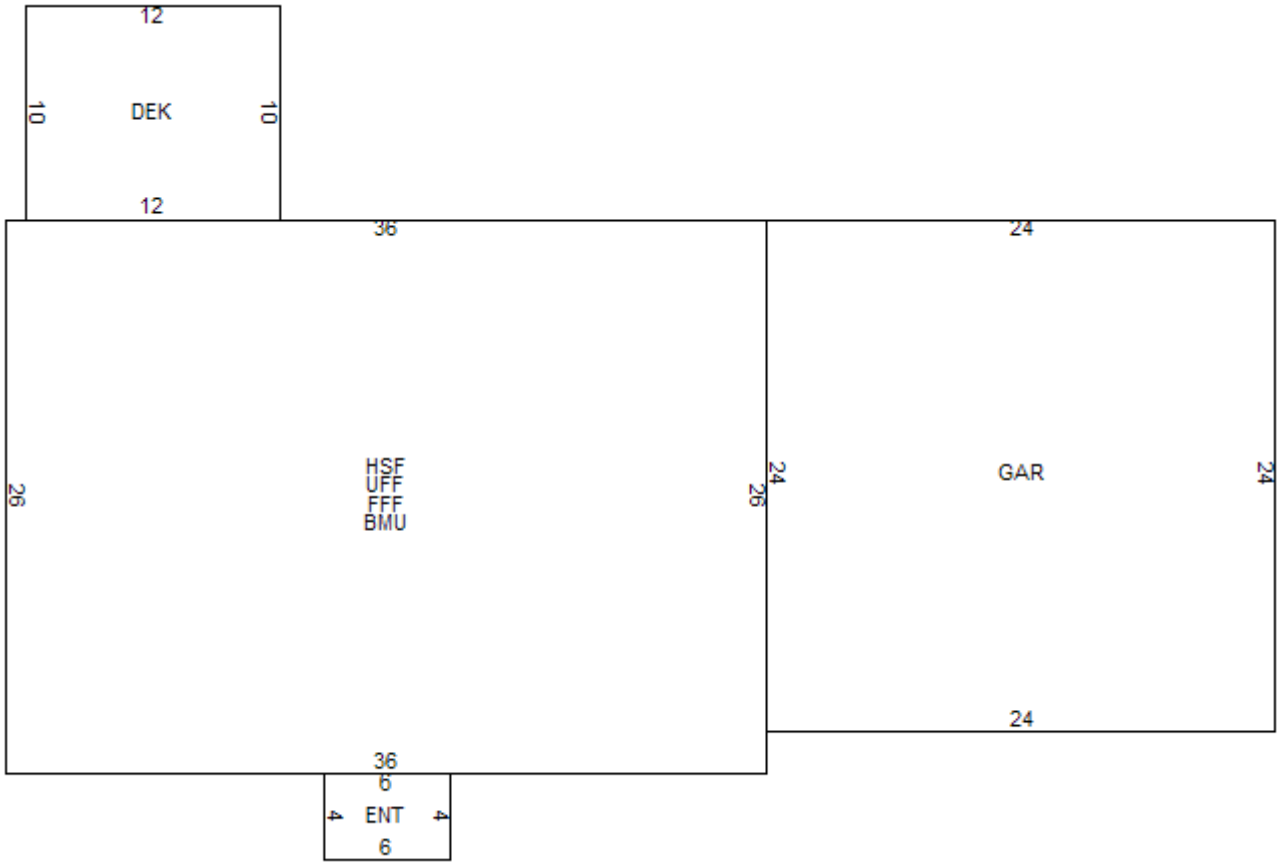

BUILDING SUB AREA DETAILS

ID	Description	Area	Adj.	Effect.
BMU	BSMNT	936	0.15	140
DEK	DECK/ENTRANCE	120	0.10	12
GAR	GARAGE	576	0.45	259
HSF	1/2 STRY FIN	936	0.50	468
UFF	UPPER FLR FIN	936	1.00	936
FFF	FST FLR FIN	936	1.00	936
ENT	ENTRANCE	24	0.10	2
GLA:	**2,340**	**4,464**		**2,753**

2013 BASE YEAR BUILDING VALUATION

Market Cost New:		**$ 177,569**
Year Built:		**2012**
Condition For Age:	AVERAGE	**2 %**
Physical:		
Functional:		
Economic:		
Temporary:		
Total Depreciation:		**2 %**
Building Value:		**$ 174,000**

OWNER INFORMATION

LARSON II, FRED L

23 WALNUT DRIVE

AUBURN, NH 03032

SALES HISTORY

Date	Book	Page	Type	Price	Grantor
05/02/2013	5434	2185	Q I	228,000	WILSON THOMAS W
08/05/2005	4527	1911	Q I	289,933	EMBUREY SEAN
09/29/2000	3508	1072	Q I	155,000	PERREAULT

PICTURE

LISTING HISTORY

01/27/10	DMVM	
01/11/10	INSP	MARKED FOR INSPECTION
10/18/06	MAIL	
08/04/06	BHVM	
11/07/02	TMRM	

NOTES

SKIN TONE; 1/10 NOH;

EXTRA FEATURES VALUATION

Feature Type	Units	Lngth x Width	Size Adj	Rate	Cond	Market Value	Notes
SHED-WOOD	96	12 x 8	227	3.50	50	381	
PATIO	121	11 x 11	192	7.00	70	1,138	EST/SNOW
						1,500	

MUNICIPAL SOFTWARE BY AVITAR

AUBURN ASSESSING OFFICE

PARCEL TOTAL TAXABLE VALUE

Year	Building	Features	Land
2011	$ 96,900	$ 1,500	$ 134,000
		Parcel Total:	$ 232,400
2013	**$ 79,500**	**$ 1,500**	**$ 143,600**
		Parcel Total:	**$ 224,600**

LAND VALUATION

Zone: RESIDENTIAL 1 & 2 **Minimum Acreage:** 2.00 **Minimum Frontage:** 200 **Site:** AVERAGE **Driveway:** PAVED **Road:** PAVED

Land Type	Units	Base Rate	NC	Adj	Site	Road	DWay	Topography	Cond	Ad Valorem	SPI	R	Tax Value	Notes
1F RES	2.000 ac	144,000	F	105	100	100	100	95 -- MILD	100	143,600	0	N	143,600	
	2.000 ac									143,600			**143,600**	

PICTURE

OWNER

LARSON II, FRED L

23 WALNUT DRIVE

AUBURN, NH 03032

TAXABLE DISTRICTS

District	Percentage

PERMITS

Date	Permit ID	Permit Type	Notes

BUILDING DETAILS

Model: **1.00 STORY FRAME RASD RANCH**
Roof: **GABLE OR HIP/ASPHALT**
Ext: **CLAP BOARD**
Int: **DRYWALL**
Floor: **CARPET**
Heat: **OIL/HOT WATER**
Bedrooms: **3** Baths: **1.0** Fixtures:
Extra Kitchens: Fireplaces:
A/C: **No** Generators:
Quality: **A0 AVG**
Com. Wall:
Size Adj: **1.1030** Base Rate: **RSA 60.00**
Bldg. Rate: **1.0368**
Sq. Foot Cost: **$ 62.21**

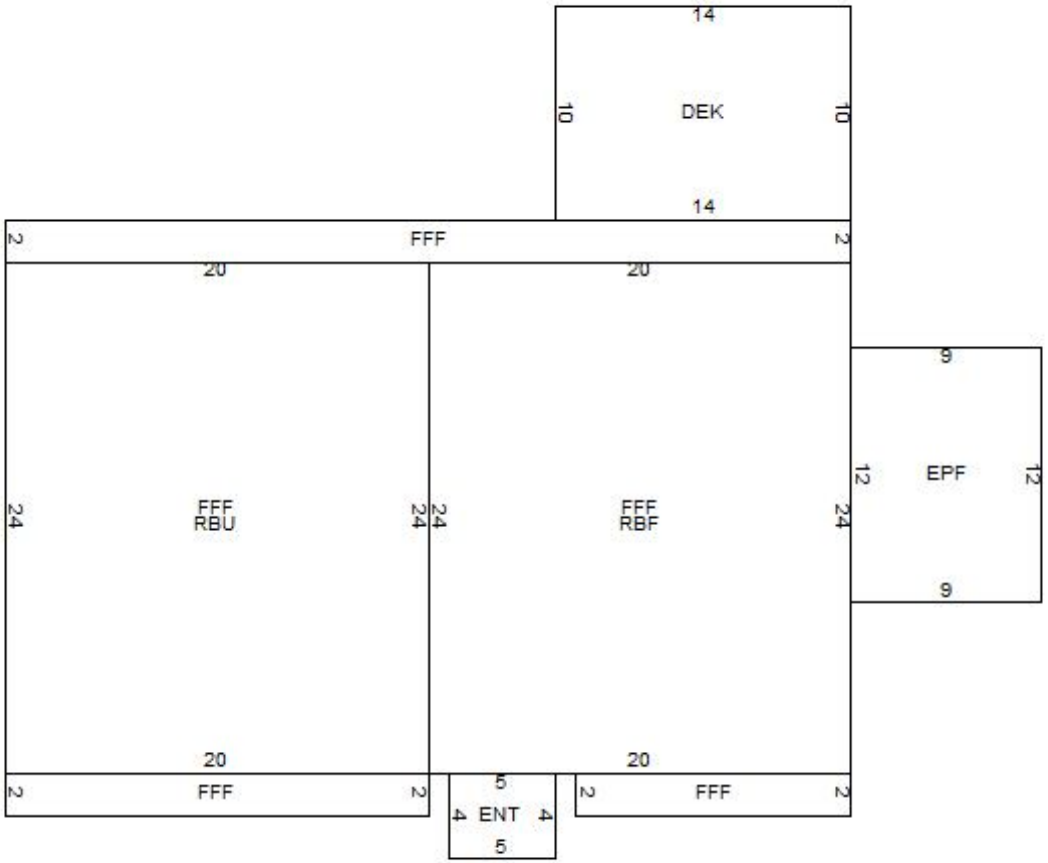

BUILDING SUB AREA DETAILS

ID	Description	Area	Adj.	Effect.
DEK	DECK/ENTRANCE	140	0.10	14
ENT	ENTRANCE	20	0.10	2
RBF	RAISED BSMNT	480	0.50	240
EPF	ENCLSD PORCH	108	0.70	76
RBU	RAISED BSMNT	480	0.25	120
FFF	FST FLR FIN	1106	1.00	1106
GLA:	**1,106**	**2,334**		**1,558**

2013 BASE YEAR BUILDING VALUATION

Market Cost New:		**$ 96,923**
Year Built:		**1976**
Condition For Age:	GOOD	**18 %**
Physical:		
Functional:		
Economic:		
Temporary:		
Total Depreciation:		**18 %**
Building Value:		**$ 79,500**

OWNER INFORMATION

CARRIEN JENNIFER R
SPRAGUE II ROBERT W
239 RATTLESNAKE HILL RD

AUBURN, NH 03032

SALES HISTORY

Date	Book	Page	Type	Price	Grantor
01/29/2013	5403	2746	Q I	240,000	MARTIN, RICHARD P

PICTURE

LISTING HISTORY

05/21/13	DMPR	
03/18/13	CRVM	
01/29/10	JBVL	
01/11/10	INSP	MARKED FOR INSPECTION
11/27/07	DMCL	
10/19/07	KCVM	
10/03/07	INSP	MARKED FOR INSPECTION
12/10/02	CMRL	

NOTES

TAN; 10/07 NOH-PATIO'S EST=SHAPE;12X8 PATIO UNDER DEK;11/07 NEW ROOF '06; 1BDRM IN RBF; 1/10 WDSTOVE ON HEARTH IN BMF=DNPU;3/13 NOH NC;KIT=OAK/LAM ; 5/13 NEW SEPTIC IN 2012

EXTRA FEATURES VALUATION

Feature Type	Units	Lngth x Width	Size Adj	Rate	Cond	Market Value	Notes
FIREPLACE 1-STAND	1		100	3,000.00	100	3,000	GAS
SCREENHOUSE	160	16 x 10	160	7.00	75	1,344	ATT TO 10X6 SHED
POOL-INGRND-VINYL	512	32 x 16	91	28.00	75	9,784	
SHED-WOOD	60	10 x 6	327	3.50	90	618	
SHED-WOOD	80	10 x 8	260	3.50	90	655	
PATIO	128	16 x 8	185	7.00	50	829	EST SHAPE
PATIO	96	12 x 8	227	7.00	50	763	EST SHAPE
						17,000	

MUNICIPAL SOFTWARE BY AVITAR

AUBURN ASSESSING OFFICE

PARCEL TOTAL TAXABLE VALUE

Year	Building	Features	Land
2011	$ 116,600	$ 17,000	$ 143,500
		Parcel Total:	$ 277,100
2013	**$ 93,100**	**$ 17,000**	**$ 147,100**
		Parcel Total:	**$ 257,200**

LAND VALUATION

Zone: RESIDENTIAL 1 & 2 **Minimum Acreage:** 2.00 **Minimum Frontage:** 200 **Site:** AVERAGE **Driveway:** PAVED **Road:** PAVED

Land Type	Units	Base Rate	NC	Adj	Site	Road	DWay	Topography	Cond	Ad Valorem	SPI	R	Tax Value	Notes
1F RES	1.028 ac	140,112	F	105	100	100	100	100 -- LEVEL	100	147,100	0	N	147,100	
	1.028 ac									147,100			**147,100**	

PICTURE

OWNER

CARRIEN JENNIFER R
SPRAGUE II ROBERT W
239 RATTLESNAKE HILL RD

AUBURN, NH 03032

TAXABLE DISTRICTS

District	Percentage

PERMITS

Date	Permit ID	Permit Type	Notes
01/22/13	13-035	SEPTIC	STATE APPROVAL CA 201

BUILDING DETAILS

Model: **1.00 STORY FRAME RASD RANCH**
Roof: **GABLE OR HIP/ASPHALT**
Ext: **VINYL SIDING**
Int: **DRYWALL/PLASTERED**
Floor: **HARDWOOD/LINOLEUM/VINYL**
Heat: **OIL/HOT WATER**
Bedrooms: **3** Baths: **1.5** Fixtures: **5**
Extra Kitchens: Fireplaces:
A/C: **No** Generators:
Quality: **A0 AVG**
Com. Wall:
Size Adj: **1.0256** Base Rate: **RSA 60.00**
Bldg. Rate: **0.9846**
Sq. Foot Cost: **$ 59.07**

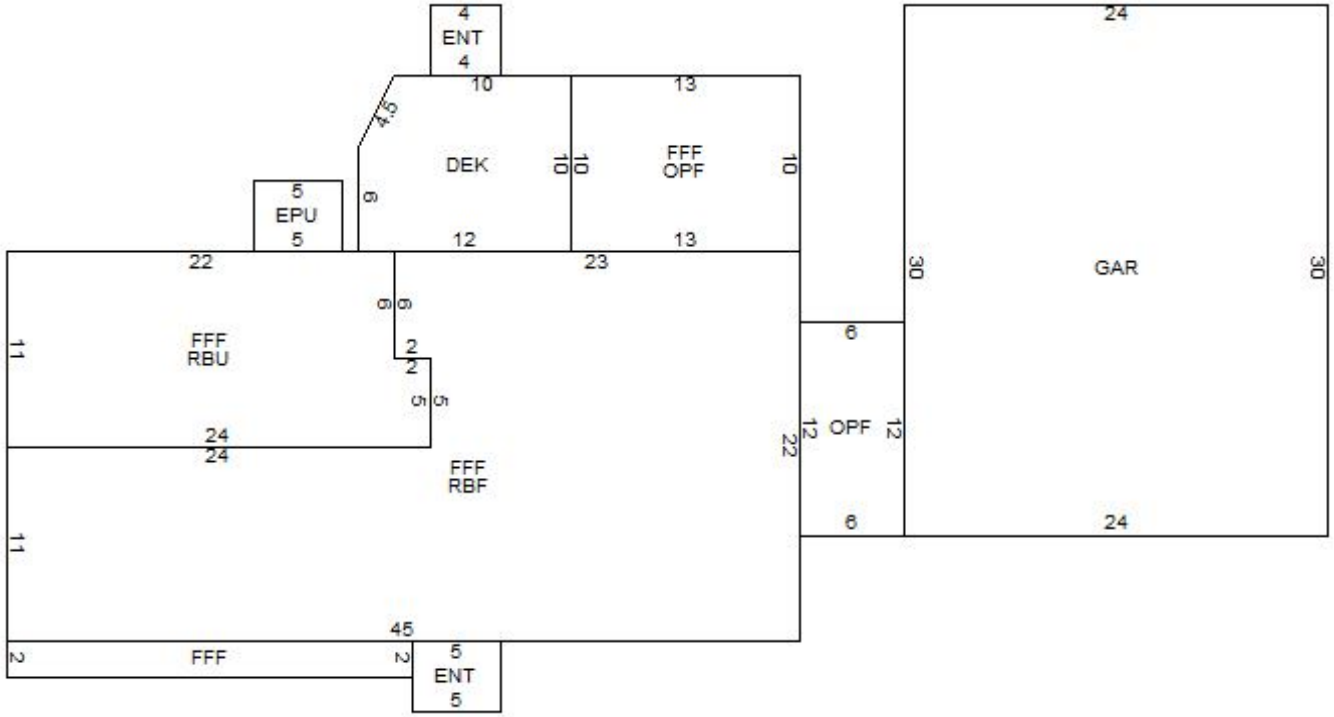

BUILDING SUB AREA DETAILS

ID	Description	Area	Adj.	Effect.
OPF	OPEN PORCH	202	0.25	51
DEK	DECK/ENTRANCE	116	0.10	12
GAR	GARAGE	720	0.45	324
RBF	RAISED BSMNT	738	0.50	369
RBU	RAISED BSMNT	252	0.25	63
ENT	ENTRANCE	36	0.10	4
FFF	FST FLR FIN	1166	1.00	1166
EPU	COVERED	20	0.35	7
GLA:	**1,166**	**3,250**		**1,996**

2013 BASE YEAR BUILDING VALUATION

Market Cost New:		**$ 117,904**
Year Built:		**1965**
Condition For Age:	GOOD	**21 %**
Physical:		
Functional:		
Economic:		
Temporary:		
Total Depreciation:		**21 %**
Building Value:		**$ 93,100**

OWNER INFORMATION

OWEN TAMMY
OWEN PETER J
37 MARGATE DRIVE

AUBURN, NH 03032

SALES HISTORY

Date	Book	Page	Type	Price	Grantor
06/15/2012	5325	2692	Q I	235,000	BOULANGER, ROBERT
01/15/2002	3708	2898	Q I	190,000	FELDE

PICTURE

LISTING HISTORY

03/18/13	CRVR	
01/29/10	JBMV	
01/13/10	DMVM	
01/11/10	INSP	MARKED FOR INSPECTION
04/17/08	KCVM	
04/14/08	INSP	MARKED FOR INSPECTION
03/18/03	BHRL	
11/26/02	CMRM	

NOTES

TAN;4/08 NOH-OPF NOW FFF/PRS-PATIO ATT TO POOL; 1/10 NOH; BACKUP GEN INSTALLED; 1/10 NOH; 3/13 NOH;RBF EST FROM MLS

EXTRA FEATURES VALUATION

Feature Type	Units	Lngth x Width	Size Adj	Rate	Cond	Market Value	Notes
FIREPLACE 2-STAND	1		100	5,000.00	100	5,000	
POOL-INGRND-VINYL	800	40 x 20	80	28.00	75	13,440	EST SNO
SHED-WOOD	100	10 x 10	220	3.50	100	770	ATT
LEAN-TO	60	10 x 6	327	4.00	100	785	ATT
PATIO	560	56 x 10	89	7.00	50	1,744	EST SNO
						21,700	

MUNICIPAL SOFTWARE BY AVITAR

AUBURN ASSESSING OFFICE

PARCEL TOTAL TAXABLE VALUE

Year	Building	Features	Land
2011	$ 116,600	$ 21,700	$ 144,200
		Parcel Total:	$ 282,500
2013	**$ 92,100**	**$ 21,700**	**$ 147,600**
		Parcel Total:	**$ 261,400**

LAND VALUATION

Zone: RESIDENTIAL 1 & 2 **Minimum Acreage:** 2.00 **Minimum Frontage:** 200 **Site:** AVERAGE **Driveway:** PAVED **Road:** PAVED

Land Type	Units	Base Rate	NC	Adj	Site	Road	DWay	Topography	Cond	Ad Valorem	SPI	R	Tax Value	Notes
1F RES	1.150 ac	140,600	F	105	100	100	100	100 -- LEVEL	100	147,600	0	N	147,600	
	1.150 ac									147,600			**147,600**	

PICTURE

OWNER

OWEN TAMMY
OWEN PETER J
37 MARGATE DRIVE

AUBURN, NH 03032

TAXABLE DISTRICTS

District	Percentage

PERMITS

Date	Permit ID	Permit Type	Notes

BUILDING DETAILS

Model: **1.00 STORY FRAME RASD RANCH**
Roof: **GABLE OR HIP/ASPHALT**
Ext: **VINYL SIDING/WOOD SHINGLE**
Int: **DRYWALL**
Floor: **CARPET/LINOLEUM/VINYL**
Heat: **OIL/HOT WATER**
Bedrooms: **3** Baths: **1.0** Fixtures:
Extra Kitchens: Fireplaces:
A/C: **No** Generators: **1**
Quality: **A0 AVG**
Com. Wall:
Size Adj: **1.0345** Base Rate: **RSA 60.00**
Bldg. Rate: **0.9931**
Sq. Foot Cost: **$ 59.59**

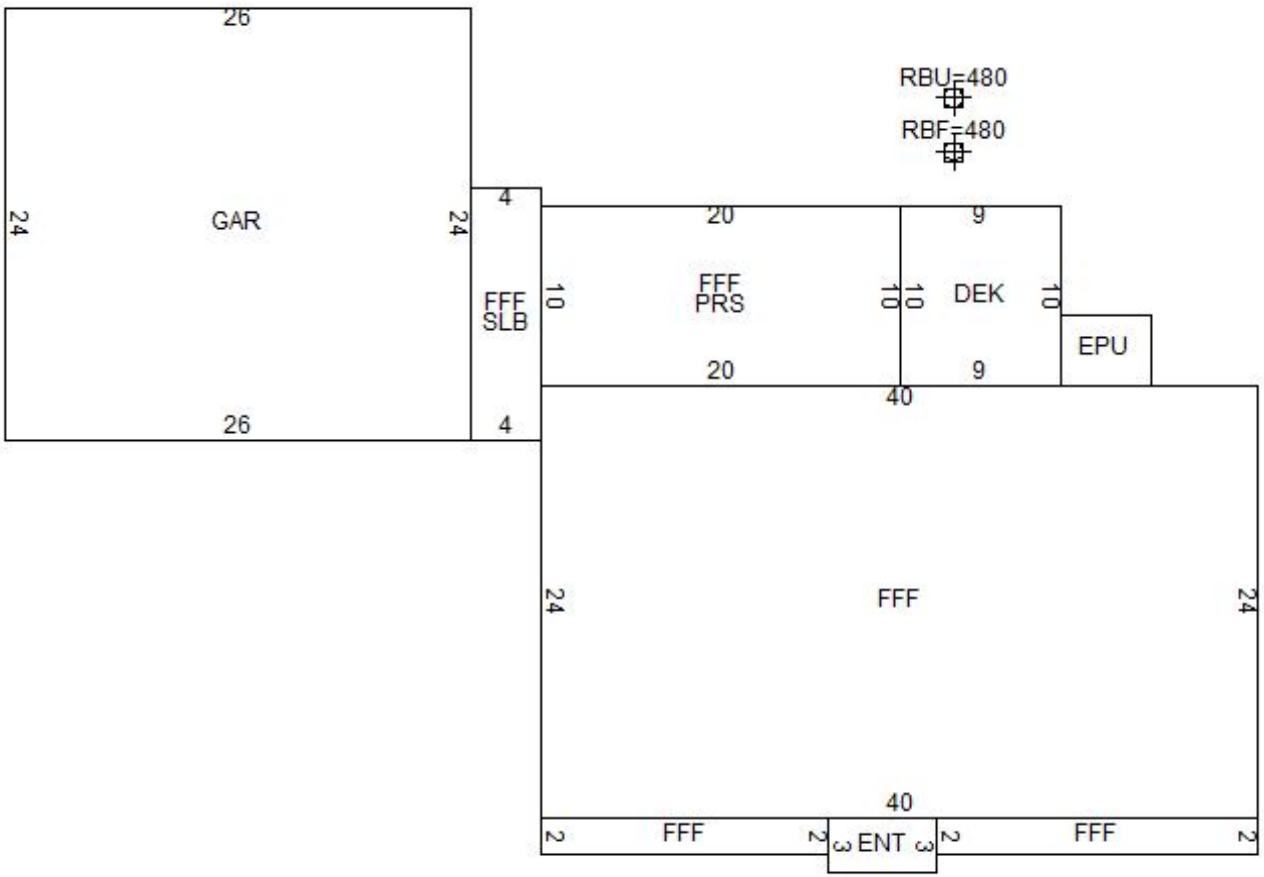

BUILDING SUB AREA DETAILS

ID	Description	Area	Adj.	Effect.
GAR	GARAGE	624	0.45	281
FFF	FST FLR FIN	1284	1.00	1284
SLB	SLB	56	0.00	0
PRS	PIER	200	-0.05	-10
EPU	COVERED	20	0.35	7
ENT	ENTRANCE	18	0.10	2
DEK	DECK/ENTRANCE	90	0.10	9
RBU	RAISED BSMNT	480	0.25	120
RBF	RAISED BSMNT	480	0.50	240
GLA:	**1,284**	**3,252**		**1,933**

2013 BASE YEAR BUILDING VALUATION

Market Cost New:		**$ 115,187**
Year Built:		**1970**
Condition For Age:	GOOD	**20 %**
Physical:		
Functional:		
Economic:		
Temporary:		
Total Depreciation:		**20 %**
Building Value:		**$ 92,100**

OWNER INFORMATION

WATT CHRISTOPHER

338 WILSON CROSSING

AUBURN, NH 03032

SALES HISTORY

Date	Book	Page	Type	Price	Grantor
04/02/2012	5302	945	Q I	202,000	338 WILSON
04/18/2011	5209	540	U I 81	100,000	SHACKELTON,

PICTURE

LISTING HISTORY

03/18/13	CRVM	
03/28/12	DMPR	
01/30/12	INSP	MARKED FOR INSPECTION
12/02/11	DMVM	DV SALES
04/17/08	KCVM	
04/14/08	INSP	MARKED FOR INSPECTION
11/25/02	CMRL	

NOTES

YELLOW; ELEC BACKUP; NEW ROOF; 12/11 NOH NEW SIDING, WINDOWS & DOORS; 3/12 N/C TO EXT;3/13 NOH-NC;

EXTRA FEATURES VALUATION

Feature Type	Units	Lngth x Width	Size Adj	Rate	Cond	Market Value	Notes
FIREPLACE 1-STAND	1		100	3,000.00	100	3,000	
SHED-WOOD	40	8 x 5	400	3.50	40	224	
						3,200	

MUNICIPAL SOFTWARE BY AVITAR

AUBURN ASSESSING OFFICE

PARCEL TOTAL TAXABLE VALUE

Year	Building	Features	Land
2011	$ 85,500	$ 3,200	$ 131,100
		Parcel Total:	$ 219,800
2013	**$ 80,200**	**$ 3,200**	**$ 140,900**
		Parcel Total:	**$ 224,300**

LAND VALUATION

Zone: RESIDENTIAL 1 & 2 **Minimum Acreage:** 2.00 **Minimum Frontage:** 200 **Site:** AVERAGE **Driveway:** PAVED **Road:** PAVED

Land Type	Units	Base Rate	NC	Adj	Site	Road	DWay	Topography	Cond	Ad Valorem	SPI	R	Tax Value	Notes
1F RES	1.219 ac	140,876	E	100	100	100	100	100 -- LEVEL	100	140,900	0	N	140,900	
	1.219 ac									140,900			**140,900**	

PICTURE

OWNER

WATT CHRISTOPHER

338 WILSON CROSSING

AUBURN, NH 03032

TAXABLE DISTRICTS

District	Percentage

PERMITS

Date	Permit ID	Permit Type	Notes

BUILDING DETAILS

Model: **1.00 STORY FRAME RANCH**
Roof: **GABLE OR HIP/ASPHALT**
Ext: **VINYL SIDING**
Int: **DRYWALL**
Floor: **HARDWOOD/LINOLEUM/VINYL**
Heat: **OIL/FA DUCTED**
Bedrooms: **3** Baths: **1.0** Fixtures:
Extra Kitchens: Fireplaces:
A/C: **No** Generators:
Quality: **A0 AVG**
Com. Wall:
Size Adj: **1.0858** Base Rate: **RSA 60.00**
Bldg. Rate: **1.0207**
Sq. Foot Cost: **$ 61.24**

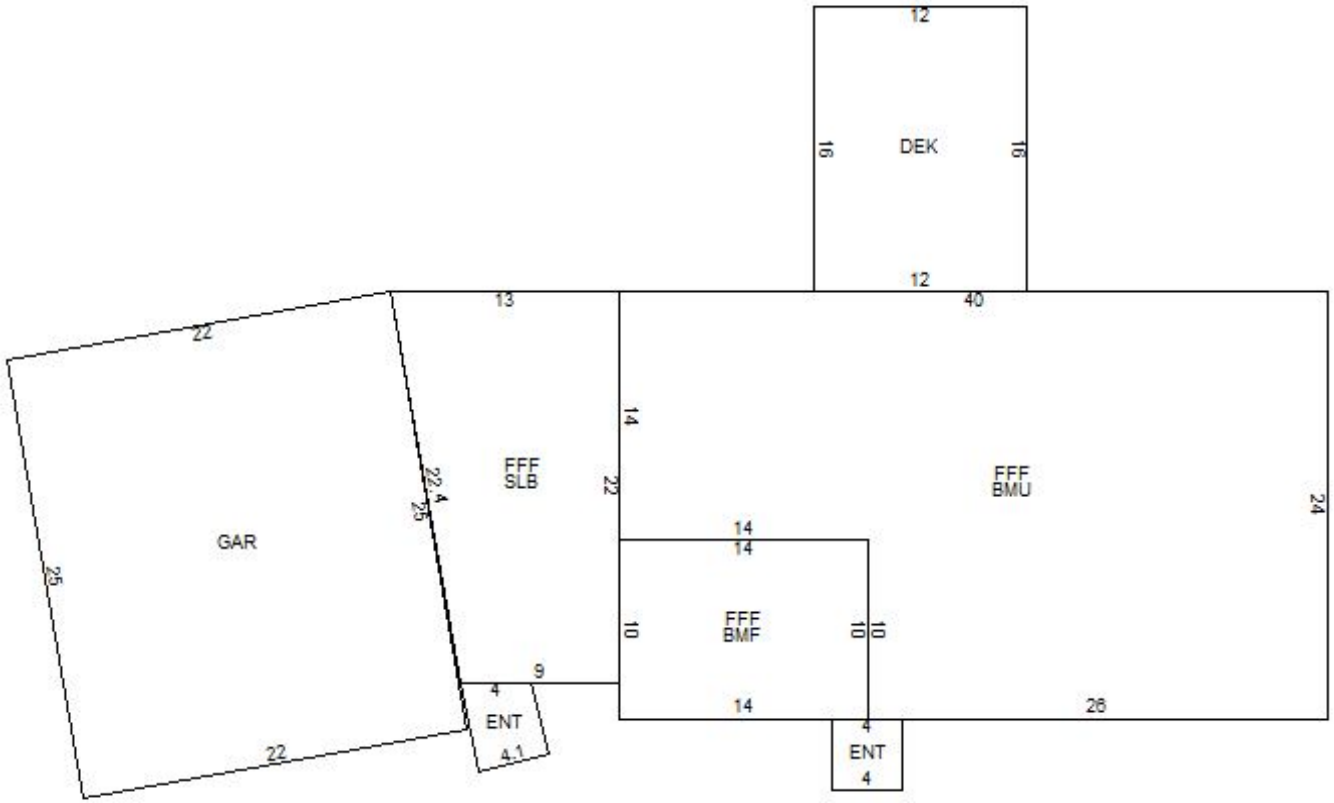

BUILDING SUB AREA DETAILS

ID	Description	Area	Adj.	Effect.
DEK	DECK/ENTRANCE	192	0.10	19
FFF	FST FLR FIN	1202	1.00	1202
BMU	BSMNT	820	0.15	123
BMF	BSMNT FINISHED	140	0.30	42
ENT	ENTRANCE	35	0.10	4
SLB	SLB	242	0.00	0
GAR	GARAGE	550	0.45	248
GLA:	**1,202**	**3,181**		**1,638**

2013 BASE YEAR BUILDING VALUATION

Market Cost New:		**$ 100,311**
Year Built:		**1970**
Condition For Age:	GOOD	**20 %**
Physical:		
Functional:		
Economic:		
Temporary:		
Total Depreciation:		**20 %**
Building Value:		**$ 80,200**

OWNER INFORMATION

WAY JONATHAN
WAY CRYSTAL
41 APPLETREE ROAD

AUBURN, NH 03032

SALES HISTORY

Date	Book	Page	Type	Price	Grantor
12/21/2012	5391	1815	Q I	180,000	BAKER JEFF
02/20/2009	4982	249	U I 37	149,000	DEUTSCHE BANK
02/20/2009	4982	2494	U I 37	149,000	NEW CENTURY HOME
10/14/2008	4955	2446	U I 51	199,550	PINAULT JASON A
08/13/2008	4942	2681	U I 51		PINAULT, JASON A

PICTURE

LISTING HISTORY

03/18/13 CRVM
01/13/10 DMVM
10/02/08 BHCM
04/12/04 DWP
12/18/02 TMRL

NOTES

CRM; 1/10 NOH; SHED HAS BEEN REMOVED;3/13; NOH NC; KIT=OAK/LAM, RECK 2014 BTH IN BSMT;

EXTRA FEATURES VALUATION

Feature Type	Units	Lngth x Width	Size Adj	Rate	Cond	Market Value	Notes
LEAN-TO	152	19 x 8	165	4.00	70	702	ATT TO GAR
						700	

MUNICIPAL SOFTWARE BY AVITAR

AUBURN ASSESSING OFFICE

PARCEL TOTAL TAXABLE VALUE

Year	Building	Features	Land
2011	$ 103,500	$ 700	$ 126,900
		Parcel Total:	$ 231,100
2013	**$ 82,600**	**$ 700**	**$ 121,100**
		Parcel Total:	**$ 204,400**

LAND VALUATION

Zone: RESIDENTIAL 1 & 2 **Minimum Acreage:** 2.00 **Minimum Frontage:** 200 **Site:** AVERAGE **Driveway:** PAVED **Road:** PAVED

Land Type	Units	Base Rate	NC	Adj	Site	Road	DWay	Topography	Cond	Ad Valorem	SPI	R	Tax Value	Notes
1F RES	0.686 ac	127,440	E	100	100	100	100	95 -- MILD	100	121,100	0	N	121,100	
	0.686 ac									121,100			**121,100**	

PICTURE

OWNER

WAY JONATHAN
WAY CRYSTAL
41 APPLETREE ROAD

AUBURN, NH 03032

TAXABLE DISTRICTS

District	Percentage

PERMITS

Date	Permit ID	Permit Type	Notes

BUILDING DETAILS

Model: **1.00 STORY FRAME RASD RANCH**
Roof: **GABLE OR HIP/ASPHALT**
Ext: **BR ON MASONRY/VINYL SIDING**
Int: **DRYWALL**
Floor: **CARPET/LINOLEUM/VINYL**
Heat: **OIL/HOT WATER**
Bedrooms: **3** Baths: **1.0** Fixtures:
Extra Kitchens: Fireplaces:
A/C: **No** Generators:
Quality: **A0 AVG**
Com. Wall:
Size Adj: **1.0514** Base Rate: **RSA 60.00**
Bldg. Rate: **1.0199**
Sq. Foot Cost: **$ 61.19**

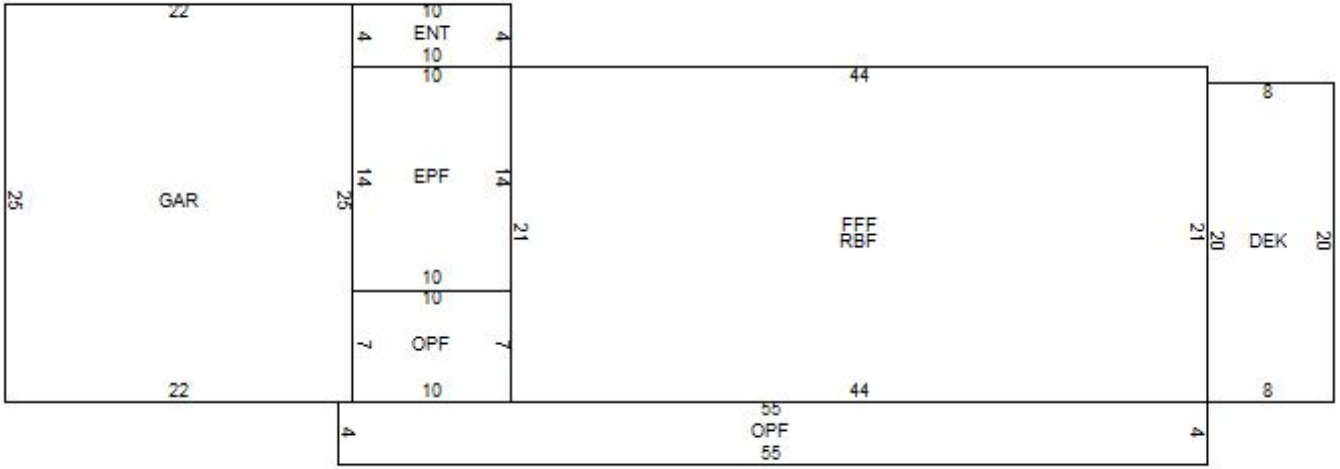

BUILDING SUB AREA DETAILS

ID	Description	Area	Adj.	Effect.
GAR	GARAGE	550	0.45	248
EPF	ENCLSD PORCH	140	0.70	98
FFF	FST FLR FIN	924	1.00	924
DEK	DECK/ENTRANCE	160	0.10	16
OPF	OPEN PORCH	290	0.25	73
ENT	ENTRANCE	40	0.10	4
RBF	RAISED BSMNT	924	0.50	462
GLA:	**924**	**3,028**		**1,825**

2013 BASE YEAR BUILDING VALUATION

Market Cost New:		**$ 111,672**
Year Built:		**1968**
Condition For Age:	AVERAGE	**26 %**
Physical:		
Functional:		
Economic:		
Temporary:		
Total Depreciation:		**26 %**
Building Value:		**$ 82,600**

OWNER INFORMATION

DIRESTA ANDREW

252 APPLETREE ROAD

AUBURN, NH 03032

SALES HISTORY

Date	Book	Page	Type	Price	Grantor
04/17/2012	5307	1710	Q I	162,533	SWEENEY DAVID F
08/15/2008	4943	0891	U I 51	165,750	COSTELLO, ERIC J &
06/20/2008	4927	2979	U I 37	161,000	BANK OF NEW YORK
12/19/2001	3696	2667	Q I	150,000	CANOVAN

PICTURE

LISTING HISTORY

03/18/13	CRVM	
03/28/12	DMPM	
01/30/12	INSP	MARKED FOR INSPECTION
12/20/07	KCPE	
01/10/07	KCPL	
09/26/06	DMPL	
03/30/06	DSPR	
12/19/05	KCPM	

NOTES

RED; 1/07 14X10 COMP-REM UC; PART OF DEK TO OPF-ACCESS TO CRL THRU FLR DNV; SM SHED DNPU N/V;3/12 NOH NEW SEPTIC IN 2011-REMOVE POOL & DECK;3/13 NOH-NC;

EXTRA FEATURES VALUATION

Feature Type	Units	Lngth x Width	Size Adj	Rate	Cond	Market Value	Notes
SHED-WOOD	192	16 x 12	143	3.50	50	480	
SHED-METAL	48	8 x 6	393	2.50	50	236	
						700	

MUNICIPAL SOFTWARE BY AVITAR

AUBURN ASSESSING OFFICE

PARCEL TOTAL TAXABLE VALUE

Year	Building	Features	Land
2011	$ 85,400	$ 2,900	$ 125,000
		Parcel Total:	$ 213,300
2013	**$ 67,600**	**$ 700**	**$ 120,000**
		Parcel Total:	**$ 188,300**

LAND VALUATION

Zone: RESIDENTIAL 1 & 2 **Minimum Acreage:** 2.00 **Minimum Frontage:** 200 **Site:** AVERAGE **Driveway:** PAVED **Road:** PAVED

Land Type	Units	Base Rate	NC	Adj	Site	Road	DWay	Topography	Cond	Ad Valorem	SPI	R	Tax Value	Notes
1F RES	0.500 ac	120,000	E	100	100	100	100	100 -- LEVEL	100	120,000	0	N	120,000	
	0.500 ac									120,000			**120,000**	

PICTURE

OWNER

DIRESTA ANDREW

252 APPLETREE ROAD

AUBURN, NH 03032

TAXABLE DISTRICTS

District	Percentage

PERMITS

Date	Permit ID	Permit Type	Notes
11/07/11	11-354	SEPTIC	
03/12/07	07-046	SEPTIC	
09/27/05	05-379	RENEWAL	RENEWAL OF PERMIT 04-3
09/09/04	04-325	RENOVATION	CONVERT EXISTING DECI

BUILDING DETAILS

Model: **1.00 STORY FRAME CONVENTNL**
Roof: **GABLE OR HIP/ASPHALT**
Ext: **CLAP BOARD**
Int: **DRYWALL**
Floor: **CARPET/PINE/SOFT WD**
Heat: **GAS/HOT WATER**
Bedrooms: **3** Baths: **2.0** Fixtures: **6**
Extra Kitchens: Fireplaces:
A/C: **No** Generators:
Quality: **B1 AVG-10**
Com. Wall:
Size Adj: **1.1309** Base Rate: **RSA 60.00**
Bldg. Rate: **0.9873**
Sq. Foot Cost: **$ 59.24**

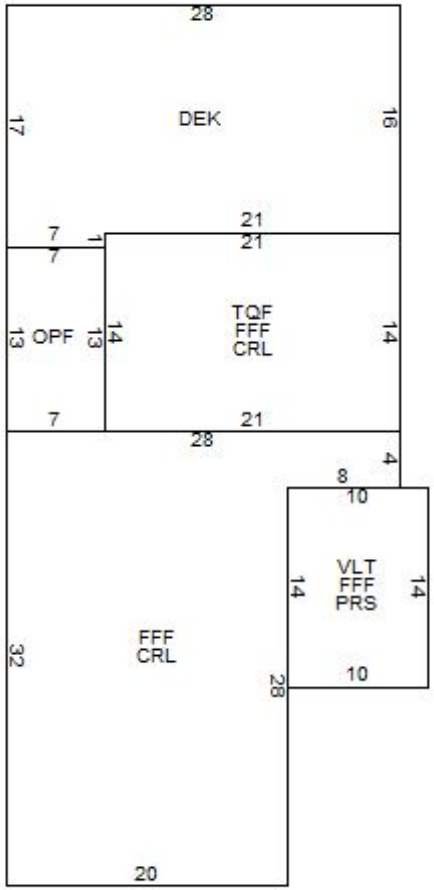

BUILDING SUB AREA DETAILS

ID	Description	Area	Adj.	Effect.
TQF	3/4 STRY FIN	294	0.75	221
OPF	OPEN PORCH	91	0.25	23
DEK	DECK/ENTRANCE	455	0.10	46
VLT	VAULTED	140	0.05	7
PRS	PIER	140	-0.05	-7
FFF	FST FLR FIN	1106	1.00	1106
CRL	CRAWL SPACE	966	0.05	48
GLA:	**1,327**	**3,192**		**1,444**

2013 BASE YEAR BUILDING VALUATION

Market Cost New:		**$ 85,543**
Year Built:		**1965**
Condition For Age:	GOOD	**21 %**
Physical:		
Functional:		
Economic:		
Temporary:		
Total Depreciation:		**21 %**
Building Value:		**$ 67,600**

OWNER INFORMATION

KOBILARCSIK PAMELA A

46 APPLETREE ROAD

AUBURN, NH 03032

SALES HISTORY

Date	Book	Page	Type	Price	Grantor
08/22/2012	5348	1134	Q I	241,533	THOMPSON SCOTT
03/28/2007	4780	2866	Q I	289,533	LENOX, VINCENT P
05/13/2005	4480	1895	U I 14	205,000	MORSE PATRICIA
09/09/2004	4360	1182	Q V	140,000	O'MEARA KENNETH
06/16/2000	3482	2908	U I 99		PARIZO

PICTURE

LISTING HISTORY

05/21/13	DMPL
03/18/13	CRVL
01/13/10	DMPR
04/03/09	KCPM
01/03/08	KCPM
09/26/06	DMPM
08/03/06	BHVM
03/30/06	DSPR

NOTES

TAN; WALKOUT BSMT-EST BSMT; 4/09 CORRECT PATIO; 1/10 NOH; COND SHED & PU AC;3/13 PU BMU AREA + VLT; 5/13 CORRECTED INT. DATA

EXTRA FEATURES VALUATION

Feature Type	Units	Lngth x Width	Size Adj	Rate	Cond	Market Value	Notes
SHED-WOOD	128	16 x 8	185	3.50	100	829	
FIREPLACE 1-STAND	1		100	3,000.00	100	3,000	GAS
						3,800	

MUNICIPAL SOFTWARE BY AVITAR

AUBURN ASSESSING OFFICE

PARCEL TOTAL TAXABLE VALUE

Year	Building	Features	Land
2011	$ 109,800	$ 800	$ 120,300
		Parcel Total:	$ 230,900
2013	**$ 105,300**	**$ 3,800**	**$ 120,200**
		Parcel Total:	**$ 229,300**

LAND VALUATION

Zone: RESIDENTIAL 1 & 2 **Minimum Acreage:** 2.00 **Minimum Frontage:** 200 **Site:** AVERAGE **Driveway:** PAVED **Road:** PAVED

Land Type	Units	Base Rate	NC	Adj	Site	Road	DWay	Topography	Cond	Ad Valorem	SPI	R	Tax Value	Notes
1F RES	0.664 ac	126,560	E	100	100	100	100	95 -- MILD	100	120,200	0	N	120,200	
	0.664 ac									120,200			**120,200**	

PICTURE

OWNER

KOBILARCSIK PAMELA A

46 APPLETREE ROAD

AUBURN, NH 03032

TAXABLE DISTRICTS

District	Percentage

PERMITS

Date	Permit ID	Permit Type	Notes
06/16/08	08-119	SHED	
06/21/06	06-183	NEW BUILDING	ZBA VARIANCE GRANTED
01/26/06	06-020	ADDITION	24 X 26 ADDITION PER ZB

BUILDING DETAILS

Model: **1.00 STORY FRAME RANCH**
Roof: **GABLE OR HIP/ASPHALT**
Ext: **VINYL SIDING**
Int: **DRYWALL**
Floor: **CARPET/HARDWOOD**
Heat: **GAS/HOT WATER**
Bedrooms: **3** Baths: **1.5** Fixtures: **6**
Extra Kitchens: Fireplaces:
A/C: **Yes 100.00 %** Generators: **1**
Quality: **A0 AVG**
Com. Wall:
Size Adj: **1.0713** Base Rate: **RSA 60.00**
Bldg. Rate: **1.1142**
Sq. Foot Cost: **$ 66.85**

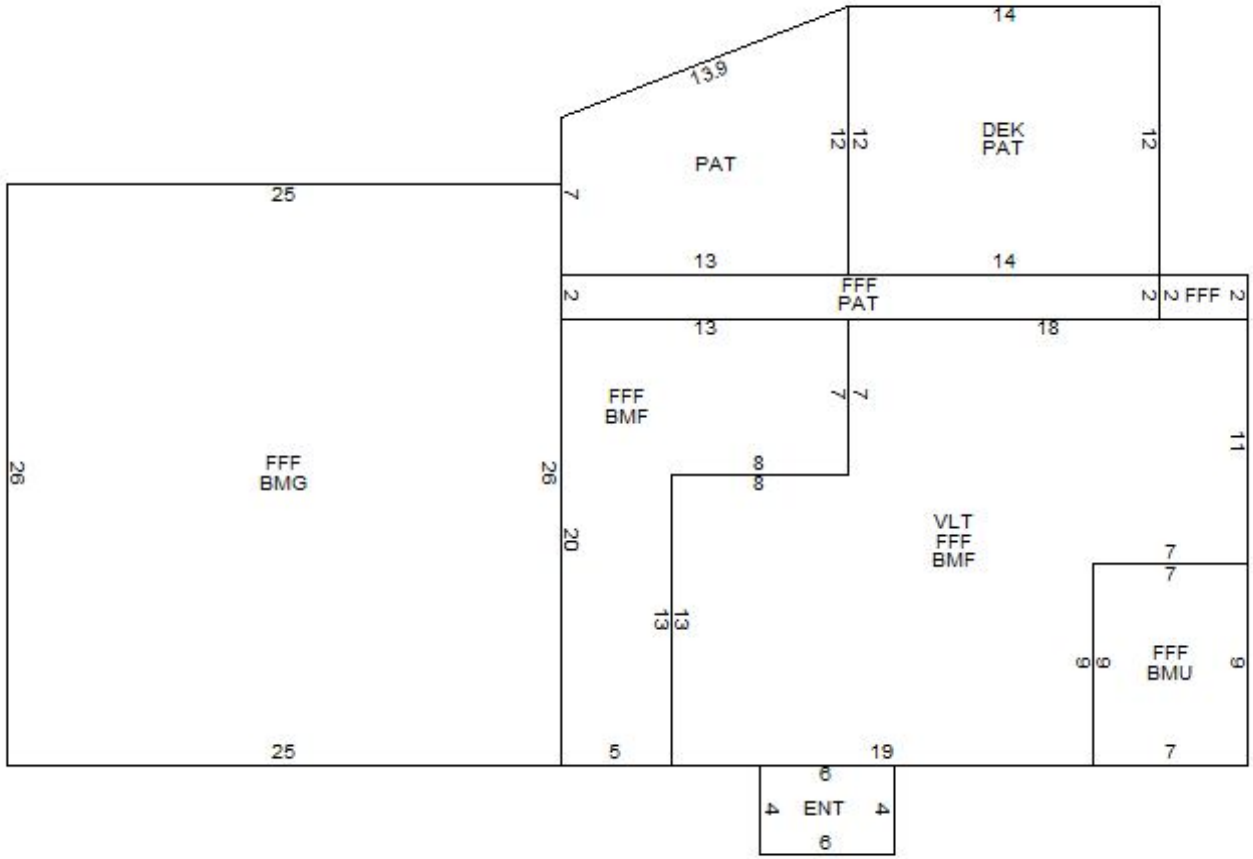

BUILDING SUB AREA DETAILS

ID	Description	Area	Adj.	Effect.
DEK	DECK/ENTRANCE	168	0.10	17
PAT	PATIO	346	0.10	35
FFF	FST FLR FIN	1332	1.00	1332
BMG	BASEMENT	650	0.20	130
ENT	ENTRANCE	24	0.10	2
BMF	BSMNT FINISHED	557	0.30	167
BMU	BSMNT	63	0.15	9
VLT	VAULTED	401	0.05	20
GLA:	**1,332**	**3,541**		**1,712**

2013 BASE YEAR BUILDING VALUATION

Market Cost New:		**$ 114,447**
Year Built:		**2006**
Condition For Age:	GOOD	**8 %**
Physical:		
Functional:		
Economic:		
Temporary:		
Total Depreciation:		**8 %**
Building Value:		**$ 105,300**

OWNER INFORMATION

SODERBERG CARL

364 CHESTER ROAD

AUBURN, NH 03032

SALES HISTORY

Date	Book	Page	Type	Price	Grantor
03/15/2013	5420	1904	Q I	268,900	SOUTHWORTH,

PICTURE

LISTING HISTORY

08/17/11	DMVM	
06/15/11	INSP	MARKED FOR INSPECTION
04/29/08	KCVL	
04/14/08	INSP	MARKED FOR INSPECTION
07/15/03	BHHC	
01/07/03	TMRM	

NOTES

BROWN;4/08 NO UPDATES,BMU STARTED TO FINISH NEVER COMPLETE DNPU PART WALL,CEILING & HEAT;8/11 NOH;

EXTRA FEATURES VALUATION

Feature Type	Units	Lngth x Width	Size Adj	Rate	Cond	Market Value	Notes

MUNICIPAL SOFTWARE BY AVITAR

AUBURN ASSESSING OFFICE

PARCEL TOTAL TAXABLE VALUE

Year	Building	Features	Land
2011	$ 128,200	$ 0	$ 143,900
		Parcel Total:	$ 272,100
2013	**$ 115,900**	**$ 0**	**$ 164,200**
		Parcel Total:	**$ 280,100**

LAND VALUATION

Zone: RESIDENTIAL 1 & 2 **Minimum Acreage:** 2.00 **Minimum Frontage:** 200 **Site:** AVERAGE **Driveway:** PAVED **Road:** PAVED

Land Type	Units	Base Rate	NC	Adj	Site	Road	DWay	Topography	Cond	Ad Valorem	SPI	R	Tax Value	Notes
1F RES	2.000 ac	144,000	E	100	100	100	100	95 -- MILD	100	136,800	0	N	136,800	
1F RES	8.234 ac	x 3,500	X	95					100	27,400	0	N	27,400	
	10.234 ac									164,200			**164,200**	

Map: 000020 **Lot: 000018** **Sub: 000000** **Card: 1 of 1** **0364 CHESTER ROAD** **AUBURN** **Printed: 07/11/2013**

PICTURE

OWNER

SODERBERG CARL

364 CHESTER ROAD

AUBURN, NH 03032

TAXABLE DISTRICTS

District	Percentage

PERMITS

Date	Permit ID	Permit Type	Notes

BUILDING DETAILS

Model: **2.00 STORY FRAME LOG HOME**
Roof: **GAMBREL/ASPHALT**
Ext: **LOGS**
Int: **WOOD/LOG**
Floor: **CARPET/HARDWOOD**
Heat: **OIL/HOT WATER**
Bedrooms: **2** Baths: **2.0** Fixtures: **6**
Extra Kitchens: Fireplaces:
A/C: **No** Generators:
Quality: **A1 AVG+10**
Com. Wall:
Size Adj: **1.0184** Base Rate: **RSA 60.00**
Bldg. Rate: **1.1088**
Sq. Foot Cost: **$ 66.53**

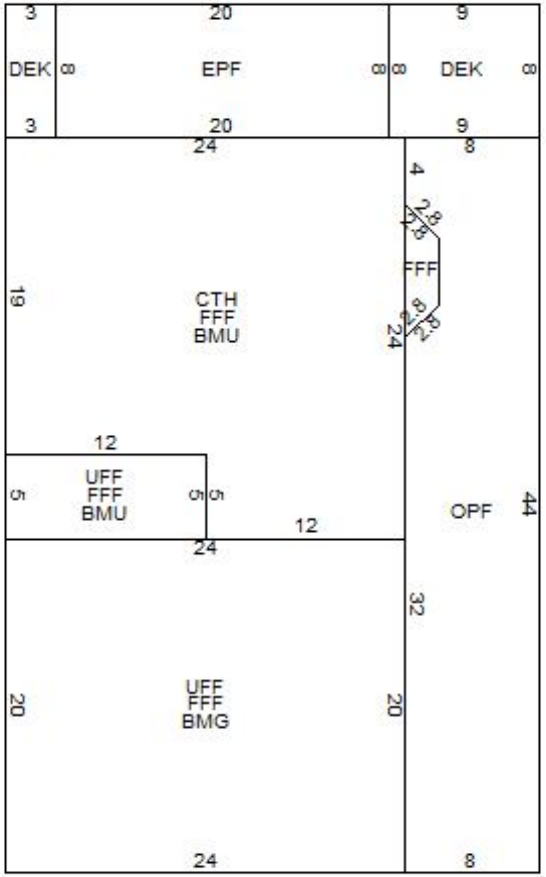

BUILDING SUB AREA DETAILS

ID	Description	Area	Adj.	Effect.
OPF	OPEN PORCH	340	0.25	85
UFF	UPPER FLR FIN	540	1.00	540
FFF	FST FLR FIN	1068	1.00	1068
BMG	BASEMENT	480	0.20	96
DEK	DECK/ENTRANCE	96	0.10	10
EPF	ENCLSD PORCH	160	0.70	112
CTH	CATHEDRAL	516	0.10	52
BMU	BSMNT	576	0.15	86
GLA:	**1,608**	**3,776**		**2,049**

2013 BASE YEAR BUILDING VALUATION

Market Cost New:		**$ 136,320**
Year Built:		**1988**
Condition For Age:	GOOD	**15 %**
Physical:		
Functional:		
Economic:		
Temporary:		
Total Depreciation:		**15 %**
Building Value:		**$ 115,900**

OWNER INFORMATION

COLETTI MICHAEL W

220 CHESTER ROAD

AUBURN, NH 03032

SALES HISTORY

Date	Book	Page	Type	Price	Grantor
04/18/2013	5430	561	Q I	179,933	DESLAURIERS,
12/23/2002	3916	1655	Q I	172,000	COLLINS, ROBERT A

PICTURE

LISTING HISTORY

02/01/10	JBVM	
01/11/10	INSP	MARKED FOR INSPECTION
11/11/05	DMCL	
07/07/05	DIUM	
04/30/03	JDCL	
01/03/03	TMRM	

NOTES

GRAY; BAD DRVWY LOC;HSE CTR; FRNT OF HSE APPR 15-20 YRS OLD; ONLY ACCED TO DEK THRU HSE;YR BLT=EST;FLR JOISTS=2X6, 18;LIMITED VU OF WTR FALL & WINTER SEASON; INT=AVG; EXT=GD; 2/10 NOH; EST HEAT AS GAS DUE TO LP BOTTLES;

EXTRA FEATURES VALUATION

Feature Type	Units	Lngth x Width	Size Adj	Rate	Cond	Market Value	Notes
SHED-WOOD	120	12 x 10	193	3.50	100	811	ATT
LEAN-TO	55	11 x 5	351	4.00	100	772	ATT
						1,600	

MUNICIPAL SOFTWARE BY AVITAR

AUBURN ASSESSING OFFICE

PARCEL TOTAL TAXABLE VALUE

Year	Building	Features	Land
2011	$ 84,100	$ 1,600	$ 72,600
		Parcel Total: $ 158,300	
2013	**$ 72,800**	**$ 1,600**	**$ 88,000**
		Parcel Total: $ 162,400	

LAND VALUATION

Zone: RESIDENTIAL 1 & 2 **Minimum Acreage:** 2.00 **Minimum Frontage:** 200 **Site:** AVERAGE **Driveway:** PAVED **Road:** PAVED

Land Type	Units	Base Rate	NC	Adj	Site	Road	DWay	Topography	Cond	Ad Valorem	SPI	R	Tax Value	Notes
1F RES	0.160 ac	88,000	E	100	100	100	100		100	88,000	0	N	88,000	
	0.160 ac									88,000			**88,000**	

PICTURE

OWNER

COLETTI MICHAEL W

220 CHESTER ROAD

AUBURN, NH 03032

TAXABLE DISTRICTS

District	Percentage

PERMITS

Date	Permit ID	Permit Type	Notes

BUILDING DETAILS

Model: **1.00 STORY FRAME CONVENTNL**
Roof: **GABLE OR HIP/ASPHALT**
Ext: **VINYL SIDING**
Int: **DRYWALL**
Floor: **PINE/SOFT WD/CARPET**
Heat: **GAS/FA DUCTED**
Bedrooms: **2** Baths: **2.0** Fixtures: **6**
Extra Kitchens: Fireplaces:
A/C: **Yes 100.00 %** Generators:
Quality: **A0 AVG**
Com. Wall:
Size Adj: **1.1580** Base Rate: **RSA 60.00**
Bldg. Rate: **1.1696**
Sq. Foot Cost: **$ 70.17**

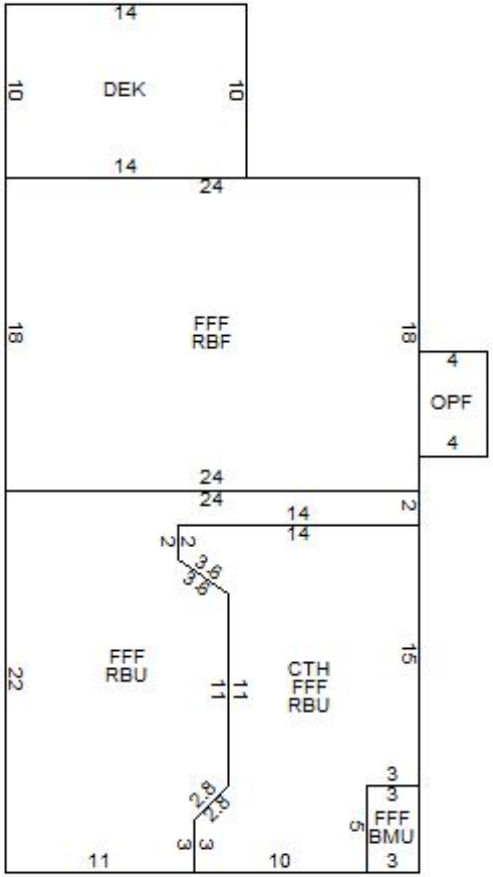

BUILDING SUB AREA DETAILS

ID	Description	Area	Adj.	Effect.
OPF	OPEN PORCH	24	0.25	6
DEK	DECK/ENTRANCE	140	0.10	14
RBU	RAISED BSMNT	513	0.25	128
FFF	FST FLR FIN	960	1.00	960
RBF	RAISED BSMNT	432	0.50	216
CTH	CATHEDRAL	222	0.10	22
BMU	BSMNT	15	0.15	2
GLA:	**960**	**2,306**		**1,348**

2013 BASE YEAR BUILDING VALUATION

Market Cost New:		**$ 94,589**
Year Built:		**1960**
Condition For Age:	GOOD	**23 %**
Physical:		
Functional:		
Economic:		
Temporary:		
Total Depreciation:		**23 %**
Building Value:		**$ 72,800**

OWNER INFORMATION

MURRAY SUSAN E
BINDERT WILLIAM
22 ORCHARD STREET

AUBURN, NH 03032

SALES HISTORY

Date	Book	Page	Type	Price	Grantor
04/02/2013	5424	2333	Q I	196,000	O'CONNELL, SEAN P
03/14/2011	5200	2892	U I 46	40	O'CONNELL, SEAN P
12/23/2002	3921	1730	U I 44		O'CONNELL, SEAN, P

PICTURE

LISTING HISTORY

04/05/13	DMPM	
03/15/12	DMVM	
01/30/12	INSP	MARKED FOR INSPECTION
12/02/11	DMVM	DV SALES
12/20/05	KCUM	
11/10/05	BHUL	
07/07/05	DMRM	

NOTES

WHITE; HOUSE HAS 6" OH IN FRONT; CEMENT BLK FOUNDATION;12/11 NOH/CORRECTED STO;3/12 NOH N/C;4/13 P/U 2ND BTH & VLT, CORRECTED BMG SIZE;

EXTRA FEATURES VALUATION

Feature Type	Units	Lngth x Width	Size Adj	Rate	Cond	Market Value	Notes

MUNICIPAL SOFTWARE BY AVITAR

AUBURN ASSESSING OFFICE

PARCEL TOTAL TAXABLE VALUE

Year	Building	Features	Land
2011	$ 91,300	$ 0	$ 121,500
		Parcel Total:	$ 212,800
2013	**$ 83,400**	**$ 0**	**$ 113,000**
		Parcel Total:	**$ 196,400**

LAND VALUATION

Zone: RESIDENTIAL 1 & 2 **Minimum Acreage:** 2.00 **Minimum Frontage:** 200 **Site:** AVERAGE **Driveway:** PAVED **Road:** PAVED

Land Type	Units	Base Rate	NC	Adj	Site	Road	DWay	Topography	Cond	Ad Valorem	SPI	R	Tax Value	Notes
1F RES	0.413 ac	113,040	E	100	100	100	100	100 -- LEVEL	100	113,000	0	N	113,000	
	0.413 ac									113,000			**113,000**	

PICTURE

OWNER

MURRAY SUSAN E
BINDERT WILLIAM
22 ORCHARD STREET

AUBURN, NH 03032

TAXABLE DISTRICTS

District	Percentage

PERMITS

Date	Permit ID	Permit Type	Notes
04/19/05	05-131	SEPTIC	SEPTIC INSTALL PER STA

BUILDING DETAILS

Model: **1.00 STORY FRAME RANCH**
Roof: **GABLE OR HIP/ASPHALT**
Ext: **VINYL SIDING**
Int: **DRYWALL**
Floor: **CARPET/HARDWOOD**
Heat: **OIL/HOT WATER**
Bedrooms: **3** Baths: **2.0** Fixtures: **6**
Extra Kitchens: Fireplaces:
A/C: **No** Generators:
Quality: **A0 AVG**
Com. Wall:
Size Adj: **1.0690** Base Rate: **RSA 60.00**
Bldg. Rate: **1.0476**
Sq. Foot Cost: **$ 62.86**

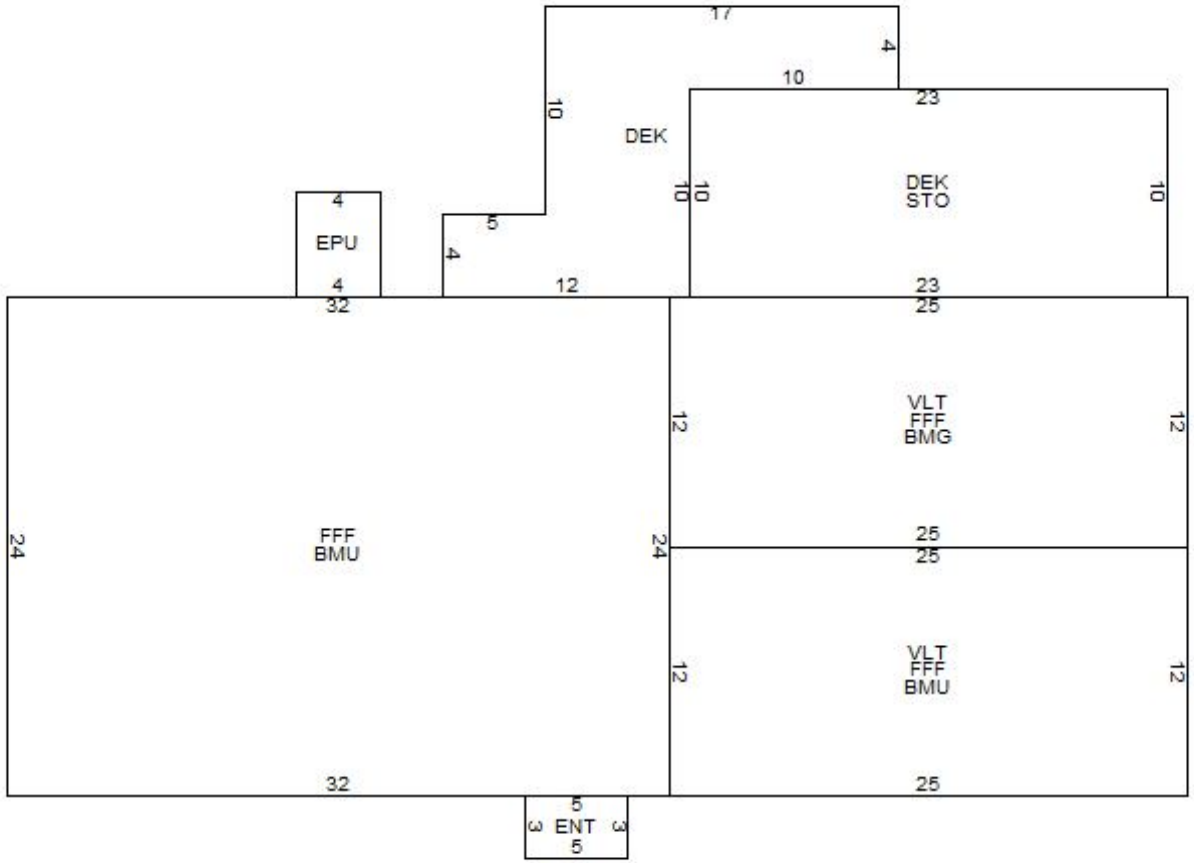

BUILDING SUB AREA DETAILS

ID	Description	Area	Adj.	Effect.
EPU	COVERED	20	0.35	7
ENT	ENTRANCE	15	0.10	2
DEK	DECK/ENTRANCE	388	0.10	39
STO	STORAGE AREA	230	0.25	58
VLT	VAULTED	600	0.05	30
FFF	FST FLR FIN	1368	1.00	1368
BMG	BASEMENT	300	0.20	60
BMU	BSMNT	1068	0.15	160
GLA:	**1,368**	**3,989**		**1,724**

2013 BASE YEAR BUILDING VALUATION

Market Cost New:		**$ 108,371**
Year Built:		**1960**
Condition For Age:	GOOD	**23 %**
Physical:		
Functional:		
Economic:		
Temporary:		
Total Depreciation:		**23 %**
Building Value:		**$ 83,400**

OWNER INFORMATION

PEVERILL KEITH M

520 MANCHESTER ROAD

AUBURN, NH 03032

SALES HISTORY

Date	Book	Page	Type	Price	Grantor
01/31/2013	5404	2886	Q I	170,000	RAYMOND, CHRIS A

PICTURE

LISTING HISTORY

03/22/13	CRVM	
01/14/10	DMPM	
05/26/09	DMVM	
03/04/09	INSP	MARKED FOR INSPECTION
10/19/07	DMVM	
10/03/07	INSP	MARKED FOR INSPECTION
10/09/02	THRM	

NOTES

WHT; NEW WINDOWS;5/09 NOH; 1/10 NOH; PU OPF; OPF NEEDS CEIL EST DONE BY 4/10;3/13 NEW 3 BDRM SEPTIC, UPDATED KIT & BATHS, HO ANS Q'S WOULD NOT ALLOW INT;

EXTRA FEATURES VALUATION

Feature Type	Units	Lngth x Width	Size Adj	Rate	Cond	Market Value	Notes
GARAGE-1 STY	480	24 x 20	93	22.00	50	4,910	
						4,900	

MUNICIPAL SOFTWARE BY AVITAR

AUBURN ASSESSING OFFICE

PARCEL TOTAL TAXABLE VALUE

Year	Building	Features	Land
2011	$ 81,900	$ 4,900	$ 51,100
		Parcel Total: $ 137,900	
2013	**$ 71,000**	**$ 4,900**	**$ 80,200**
		Parcel Total: $ 156,100	

LAND VALUATION

Zone: RESIDENTIAL 1 & 2 **Minimum Acreage:** 2.00 **Minimum Frontage:** 200 **Site:** AVERAGE **Driveway:** DIRT **Road:** PAVED

Land Type	Units	Base Rate	NC	Adj	Site	Road	DWay	Topography	Cond	Ad Valorem	SPI	R	Tax Value	Notes
1F RES	0.120 ac	82,666	E	100	100	100	97	100 -- LEVEL	100	80,200	0	N	80,200	
	0.120 ac									80,200			**80,200**	

PICTURE

OWNER

PEVERILL KEITH M

520 MANCHESTER ROAD

AUBURN, NH 03032

TAXABLE DISTRICTS

District	Percentage

PERMITS

Date	Permit ID	Permit Type	Notes
09/04/12	12-393	SEPTIC	
09/14/09	09-191	RENOVATION	ZBA VARIANCE GRANTED

BUILDING DETAILS

Model: **1.75 STORY FRAME CONVENTION**
Roof: **GABLE OR HIP/ASPHALT**
Ext: **VINYL SIDING**
Int: **DRYWALL**
Floor: **HARDWOOD**
Heat: **OIL/HOT WATER**
Bedrooms: **3** Baths: **2.0** Fixtures:
Extra Kitchens: Fireplaces:
A/C: **No** Generators:
Quality: **A1 AVG+10**
Com. Wall:
Size Adj: **1.1095** Base Rate: **RSA 60.00**
Bldg. Rate: **1.1721**
Sq. Foot Cost: **$ 70.33**

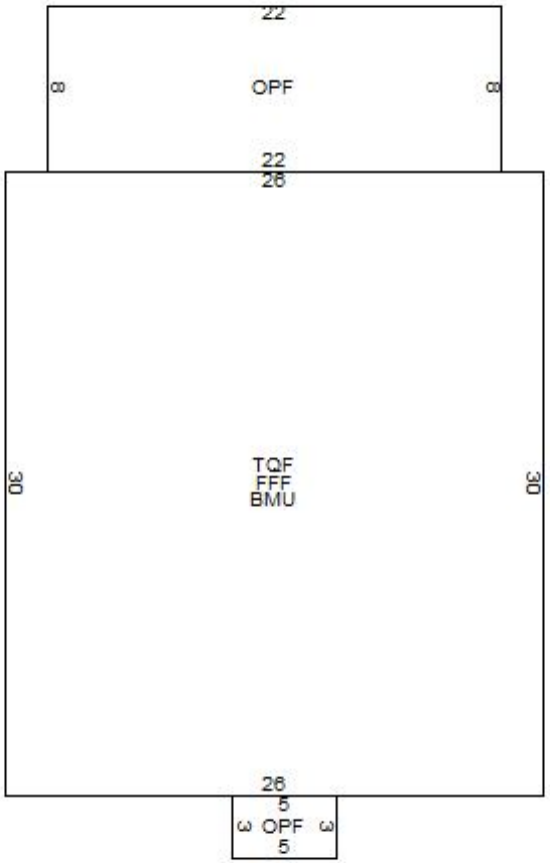

BUILDING SUB AREA DETAILS

ID	Description	Area	Adj.	Effect.
TQF	3/4 STRY FIN	780	0.75	585
FFF	FST FLR FIN	780	1.00	780
BMU	BSMNT	780	0.15	117
OPF	OPEN PORCH	191	0.25	48
GLA:	**1,365**	**2,531**		**1,530**

2013 BASE YEAR BUILDING VALUATION

Market Cost New:		**$ 107,605**
Year Built:		**1920**
Condition For Age:	GOOD	**29 %**
Physical:		
Functional:		
Economic:	HWY	**5 %**
Temporary:		
Total Depreciation:		**34 %**
Building Value:		**$ 71,000**

OWNER INFORMATION

FLANIGAN GARY T
FLANIGAN LAURIE J
75 RAYMOND ROAD

AUBURN, NH 03032

SALES HISTORY

Date	Book	Page	Type	Price	Grantor
09/10/2012	5354	1140	Q I	375,000	FOSKITT PAUL J &
01/10/2012	5278	1339	U I 44	40	FOSKITT PAUL J
09/12/2003	4150	1325	Q I	350,000	SCARLETT HOMES
12/05/2001	3685	1522	U V 38	85,000	SEAVEY HEIRS

PICTURE

LISTING HISTORY

03/22/13	CRVL	
08/17/11	DMVM	
06/15/11	INSP	MARKED FOR INSPECTION
01/04/08	DMVM	
12/03/04	DSPL	
04/13/04	JDPM	
10/20/03	DWP	
01/13/03	TMRL	

NOTES

CREAM;OPN FIELD; FF LVL W/ROAD; 12/5/01 SALE UMQ #38; 3/13 BOUGHT FROM FRIENDS, HAD TO REPLACE FAULTY ROOF, LEAKY WINDOWS + PIPES IN AREAS FROZE;

EXTRA FEATURES VALUATION

Feature Type	Units	Lngth x Width	Size Adj	Rate	Cond	Market Value	Notes
FIREPLACE 1-STAND	1		100	3,000.00	100	3,000	GAS
PATIO	336	12 x 28	108	7.00	80	2,032	EST/SHAPE
SHED-WOOD	264	12 x 22	121	3.50	100	1,118	
						6,200	

MUNICIPAL SOFTWARE BY AVITAR

AUBURN ASSESSING OFFICE

PARCEL TOTAL TAXABLE VALUE

Year	Building	Features	Land
2011	$ 224,200	$ 6,200	$ 127,000
		Parcel Total:	$ 357,400
2013	**$ 205,500**	**$ 6,200**	**$ 148,900**
		Parcel Total:	**$ 360,600**

LAND VALUATION

Zone: COMMERCIAL 1 & 2 **Minimum Acreage:** 2.00 **Minimum Frontage:** 200 **Site:** GOOD **Driveway:** PAVED **Road:** PAVED

Land Type	Units	Base Rate	NC	Adj	Site	Road	DWay	Topography	Cond	Ad Valorem	SPI	R	Tax Value	Notes
1F RES	2.000 ac	144,000	E	100	103	100	100	100 -- LEVEL	100	148,300	0	N	148,300	
1F RES	0.167 ac	x 3,500	X	100				100 -- LEVEL	100	600	0	N	600	
	2.167 ac									148,900			**148,900**	

PICTURE

OWNER

FLANIGAN GARY T
FLANIGAN LAURIE J
75 RAYMOND ROAD

AUBURN, NH 03032

TAXABLE DISTRICTS

District	Percentage

PERMITS

Date	Permit ID	Permit Type	Notes
08/16/07	07-205	SHED	
04/10/03	03-063	SEPTIC	SEPTIC INSTALL NEW HO

BUILDING DETAILS

Model: **2.50 STORY FRAME COLONIAL**
Roof: **GABLE OR HIP/ASPHALT**
Ext: **VINYL SIDING**
Int: **DRYWALL**
Floor: **CARPET/HARDWOOD**
Heat: **OIL/HOT WATER**
Bedrooms: **3** Baths: **2.5** Fixtures: **9**
Extra Kitchens: Fireplaces: **1**
A/C: **Yes 100.00 %** Generators:
Quality: **A3 AVG+30**
Com. Wall:
Size Adj: **0.9208** Base Rate: **RSA 60.00**
Bldg. Rate: **1.2083**
Sq. Foot Cost: **$ 72.50**

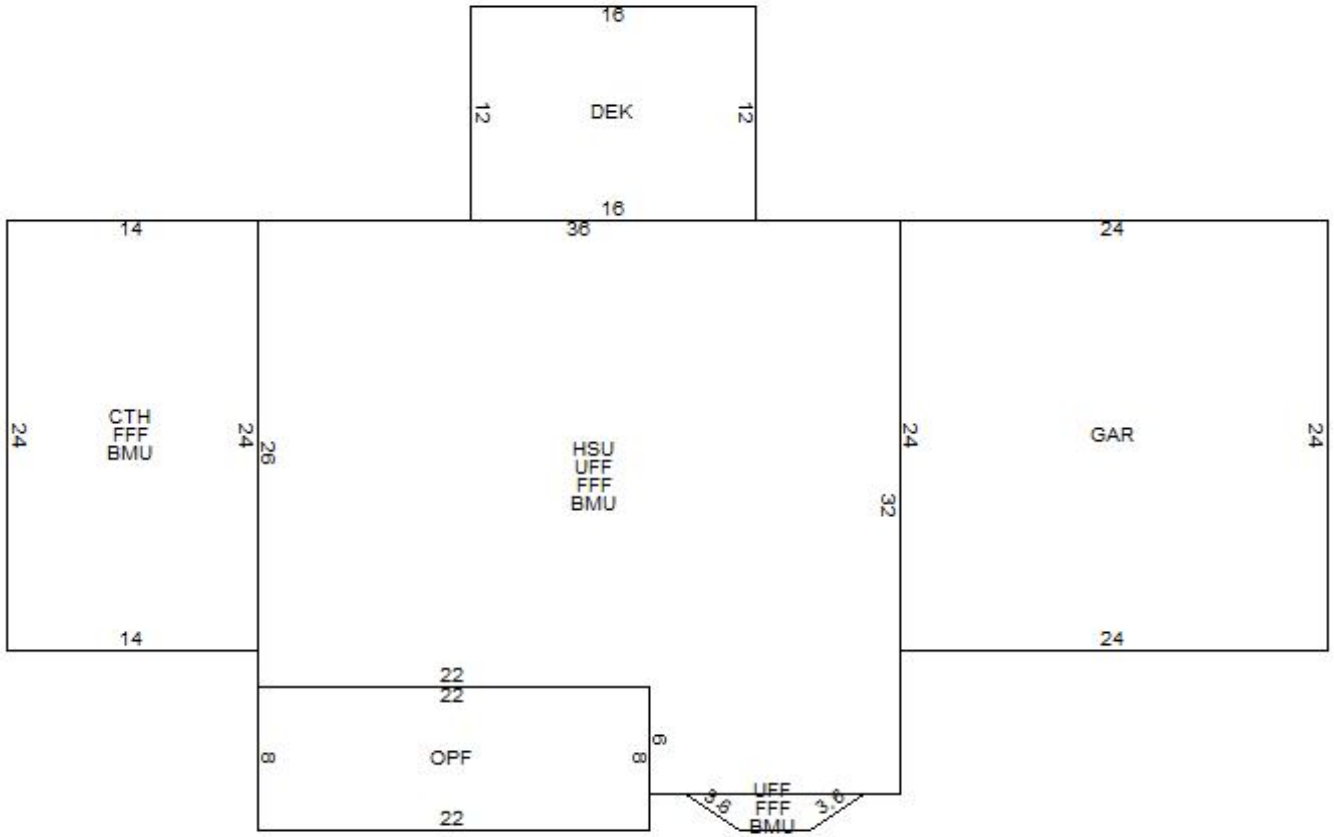

BUILDING SUB AREA DETAILS

ID	Description	Area	Adj.	Effect.
GAR	GARAGE	576	0.45	259
HSU	1/2 STRY UNFIN	1020	0.25	255
UFF	UPPER FLR FIN	1034	1.00	1034
FFF	FST FLR FIN	1370	1.00	1370
BMU	BSMNT	1370	0.15	206
CTH	CATHEDRAL	336	0.10	34
DEK	DECK/ENTRANCE	192	0.10	19
OPF	OPEN PORCH	176	0.25	44
GLA:	**2,404**	**6,074**		**3,221**

2013 BASE YEAR BUILDING VALUATION

Market Cost New:		**$ 233,523**
Year Built:		**2003**
Condition For Age:	AVERAGE	**12 %**
Physical:		
Functional:		
Economic:		
Temporary:		
Total Depreciation:		**12 %**
Building Value:		**$ 205,500**

OWNER INFORMATION

ASHCARRIER LLC

31 WOOD HILL DRIVE

AUBURN, NH 03032

SALES HISTORY

Date	Book	Page	Type	Price	Grantor
03/30/2012	5301	2124	Q I	290,000	TSOURVAKAS,
04/24/2001	3577	1517	U I 38		TSOURVAKAS

PICTURE

LISTING HISTORY

03/22/13	CRVM
03/29/12	DMPR
04/29/11	DMPR
05/26/10	LMHC
03/25/10	DMPL
04/03/09	DMPL
09/26/06	KCPM
07/14/03	BHHR

NOTES

BEIGE; (2) 1/2 BTHS; DNPU PLAYHOUSE=NV; OLD POST OFFICE CONVERTED INTO PIZZA SHOP, 4/09 2 SIDES OF BLDG=VINYL SIDING/PU OPF,DEK & COLD STORAGE; DNPU HANDI CAP RAMP; 3/10 REMOVED 1 COLD STO & ADDED HARDWD; BATHS=2 AVG 4 USE;3/13 LOUKO MAMMA'S,

EXTRA FEATURES VALUATION

Feature Type	Units	Lngth x Width	Size Adj	Rate	Cond	Market Value	Notes
PAVING	6,204	94 x 66	63	3.25	80	10,162	
COLD STORAGE	42	6 x 7	400	45.00	60	4,536	
						14,700	

MUNICIPAL SOFTWARE BY AVITAR

AUBURN ASSESSING OFFICE

PARCEL TOTAL TAXABLE VALUE

Year	Building	Features	Land
2011	$ 86,700	$ 14,700	$ 255,000
		Parcel Total:	$ 356,400
2013	**$ 85,400**	**$ 14,700**	**$ 180,000**
		Parcel Total:	**$ 280,100**

LAND VALUATION

Zone: COMMERCIAL 1 & 2 **Minimum Acreage:** 2.00 **Minimum Frontage:** 200 **Site:** AVERAGE **Driveway:** PAVED **Road:** PAVED

Land Type	Units	Base Rate	NC	Adj	Site	Road	DWay	Topography	Cond	Ad Valorem	SPI	R	Tax Value	Notes
COM/IND	2.000 ac	144,000	E	100	100	100	100	100 -- LEVEL	125	180,000	0	N	180,000	150USE-25SHAPE/WET
COM/IND	0.003 ac	x 3,500	X	100				100 -- LEVEL	100	0	0	N	0	
	2.003 ac									180,000			**180,000**	

PICTURE

OWNER

ASHCARRIER LLC

31 WOOD HILL DRIVE

AUBURN, NH 03032

TAXABLE DISTRICTS

District	Percentage

PERMITS

Date	Permit ID	Permit Type	Notes
08/17/10	10-221	ALTERATION	OWNER MUST COMPLY W
05/29/08	08-099	DECK	PER ZBA VARIANCE, UP T
05/08/08	08-081	REMODEL	
04/02/08	08-050	RENOVATION	
02/14/08	08-019	REMODEL	DOES NOT INCLUDE ELEC
08/18/05	05-316	SIGN	SIGN FOR MASSABESIC PI

BUILDING DETAILS

Model: **1.00 STORY FRAME RESTAURANT**
Roof: **GABLE OR HIP/ASPHALT**
Ext: **VINYL SIDING/CEDAR/REDWD**
Int: **DRYWALL**
Floor: **LINOLEUM/VINYL/HARDWOOD**
Heat: **GAS/FA DUCTED**
Bedrooms: Baths: **2.0** Fixtures:
Extra Kitchens: Fireplaces:
A/C: **No** Generators:
Quality: **A0 AVG**
Com. Wall:
Size Adj: **1.1189** Base Rate: **CFF 80.00**
Bldg. Rate: **1.0853**
Sq. Foot Cost: **$ 86.83**

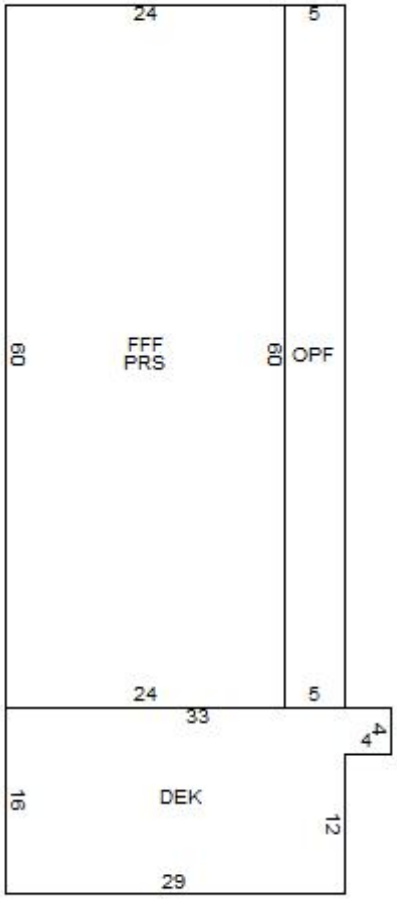

BUILDING SUB AREA DETAILS

ID	Description	Area	Adj.	Effect.
FFF	FST FLR FIN	1440	1.00	1440
PRS	PIER	1440	-0.05	-72
OPF	OPEN PORCH	300	0.25	75
DEK	DECK/ENTRANCE	480	0.10	48
GLA:	**1,440**	**3,660**		**1,491**

2013 BASE YEAR BUILDING VALUATION

Market Cost New:		**$ 129,464**
Year Built:		**1900**
Condition For Age:	AVERAGE	**34 %**
Physical:		
Functional:		
Economic:		
Temporary:		
Total Depreciation:		**34 %**
Building Value:		**$ 85,400**

SECTION 9

C. FINAL VALUATION COST TABLES

Land Pricing Zones

Zone 01

Description:	RURAL	$ 3,500	@	0.010 ac
Lot Size:	3.00	$ 80,000	@	0.100 ac
Frontage:	300	$ 100,000	@	0.250 ac
Lot Price:	$ 148,000	$ 120,000	@	0.500 ac
Excess Acreage:	$ 3,500	$ 140,000	@	1.000 ac
Excess Frontage:	$ 110	$ 144,000	@	2.000 ac
Water Frontage:	$ 100,000	$ 148,000	@	3.000 ac
View:	$ 100,000	$ 148,000	@	3.000 ac
		$ 148,000	@	3.000 ac

Zone 02

Description:	RESIDENTIAL 1 & 2	$ 3,500	@	0.010 ac
Lot Size:	2.00	$ 80,000	@	0.100 ac
Frontage:	200	$ 100,000	@	0.250 ac
Lot Price:	$ 144,000	$ 120,000	@	0.500 ac
Excess Acreage:	$ 3,500	$ 140,000	@	1.000 ac
Excess Frontage:	$ 110	$ 144,000	@	2.000 ac
Water Frontage:	$ 100,000	$ 144,000	@	2.000 ac
View:	$ 100,000	$ 144,000	@	2.000 ac
		$ 144,000	@	2.000 ac

Zone 03

Description:	COMMERCIAL 1 & 2	$ 3,500	@	0.010 ac
Lot Size:	2.00	$ 80,000	@	0.100 ac
Frontage:	200	$ 100,000	@	0.250 ac
Lot Price:	$ 144,000	$ 120,000	@	0.500 ac
Excess Acreage:	$ 3,500	$ 140,000	@	1.000 ac
Excess Frontage:	$ 300	$ 144,000	@	2.000 ac
Water Frontage:	$ 100,000	$ 144,000	@	2.000 ac
View:	$ 100,000	$ 144,000	@	2.000 ac
		$ 144,000	@	2.000 ac

Zone 04

Description:	INDUSTRIAL	$ 3,500	@	0.010 ac
Lot Size:	3.00	$ 80,000	@	0.100 ac
Frontage:	300	$ 100,000	@	0.250 ac
Lot Price:	$ 148,000	$ 120,000	@	0.500 ac
Excess Acreage:	$ 3,500	$ 140,000	@	1.000 ac
Excess Frontage:	$ 200	$ 144,000	@	2.000 ac
Water Frontage:	$ 100,000	$ 148,000	@	3.000 ac
View:	$ 100,000	$ 148,000	@	3.000 ac
		$ 148,000	@	3.000 ac

Land Use Codes

Code	Description
79D	79-D HISTORIC BARN
79F	79-F FARM STRUCT
CI	COM/IND
EX-F	EXEMPT-FED
EX-G	EX ACTIVITY TAX AREA
EX-M	EXEMPT-MUNIC
EX-P	EXEMPT-PILT
EX-S	EXEMPT-STATE
R1	1F RES
R1A	1F RES WTR ACS
R1W	1F RES WTRFRNT
R2	2F RES
R2A	2F RES WTR ACS
R2W	2F RES WTRFRNT
R3	3F RES
R3A	3F RES WTR ACS
R3W	3F RES WTRFRNT
R4	4F RES
R4A	4F RES WTR ACS
R4W	4F RES WTRFRNT
UTL	UTILITY-OTHER
UTLE	UTILITY-ELEC
UTLG	UTILITY-GAS
UTLW	UTILITY-WATER

Neighborhoods

Code	Adjustment	Value
A	AVG-60	40
B	AVG -40	60
C	AVG -20	80
D	AVG -10	90
E	AVG	100
F	AVG +	105
G	AVG +20	120
H	AVG +30	130
I	AVG +40	140
J	AVG +50	150
K	AVG +60 160%	160
L	AVG +70 170%	170
M	AVG +80 180%	180
N	AVG +90 190%	190
P	AVG +100 200%	200
Q	SPECIAL 225%	225
R	SPECIAL 250%	250
S	SPECIAL 275%	275
T	SPECIAL 300%	300
X	BACKLAND	100

Site Modifiers

Code	Description	Value
A	AVERAGE	100
B	BEST	125
E	EXC	115
F	FAIR	95
G	GOOD	103
N	NATURAL	90
U	UNDEV/WOODED	100
UC	UNDEV/CLEARED	100
Y	VERY GOOD	110

Topography Modifiers

Code	Description	Value
A	LEVEL	100
B	MILD	95
C	ROLLING	90
D	MODERATE	85
E	STEEP	75
F	SEVERE	50

Road Modifiers

Code	Description	Value
D	DIRT	95
G	GRAVEL	95
P	PAVED	100

Driveway Modifiers

Code	Description	Value
C	CONCRETE	100
D	DIRT	97
G	GRAVEL	97
N	NONE	100
PV	PAVED	100

Current Use Codes

Code	Description	Min. Value	Max. Value
CUDE	DISCRETNRY	$ 0.00	$ 0.00
CUFL	FARM LAND	$ 25.00	$ 425.00
CUMH	MNGD HARDWD	$ 21.00	$ 32.00
CUMO	MNGD OTHER	$ 10.00	$ 15.00
CUMW	MNGD PINE	$ 87.00	$ 131.00
CUUH	UNMNGD HARDWD	$ 43.00	$ 65.00
CUUL	UNPRODUCTIVE	$ 10.00	$ 10.00
CUUO	UNMNGD OTHER	$ 31.00	$ 47.00
CUUW	UNMNGD PINE	$ 118.00	$ 177.00
CUWL	WETLANDS	$ 10.00	$ 10.00

Auburn

Land Area Size Adjustment Factors

Acres	Adj.	Acres	Adj.	Acres	Adj.	Acres	Adj.	Acres	Adj.
8	96.00	50	80.00	92	68.00	134	60.00	176	53.00
9	96.00	51	80.00	93	68.00	135	60.00	177	53.00
10	95.00	52	79.00	94	68.00	136	60.00	178	53.00
11	95.00	53	79.00	95	68.00	137	59.00	179	53.00
12	94.00	54	79.00	96	68.00	138	59.00	180	53.00
13	94.00	55	78.00	97	67.00	139	59.00	181	52.00
14	93.00	56	78.00	98	67.00	140	59.00	182	52.00
15	93.00	57	78.00	99	67.00	141	59.00	183	52.00
16	93.00	58	78.00	100	67.00	142	58.00	184	52.00
17	92.00	59	77.00	101	66.00	143	58.00	185	52.00
18	92.00	60	77.00	102	66.00	144	58.00	186	52.00
19	91.00	61	77.00	103	66.00	145	58.00	187	52.00
20	91.00	62	76.00	104	66.00	146	58.00	188	52.00
21	90.00	63	76.00	105	66.00	147	58.00	189	51.00
22	90.00	64	76.00	106	65.00	148	57.00	190	51.00
23	90.00	65	75.00	107	65.00	149	57.00	191	51.00
24	89.00	66	75.00	108	65.00	150	57.00	192	51.00
25	89.00	67	75.00	109	65.00	151	57.00	193	51.00
26	88.00	68	75.00	110	65.00	152	57.00	194	51.00
27	88.00	69	74.00	111	64.00	153	57.00	195	51.00
28	88.00	70	74.00	112	64.00	154	56.00	196	51.00
29	87.00	71	74.00	113	64.00	155	56.00	197	50.00
30	87.00	72	74.00	114	64.00	156	56.00	198	50.00
31	87.00	73	73.00	115	63.00	157	56.00	199	50.00
32	86.00	74	73.00	116	63.00	158	56.00	200	50.00
33	86.00	75	73.00	117	63.00	159	56.00		
34	85.00	76	72.00	118	63.00	160	56.00		
35	85.00	77	72.00	119	63.00	161	55.00		
36	85.00	78	72.00	120	63.00	162	55.00		
37	84.00	79	72.00	121	62.00	163	55.00		
38	84.00	80	71.00	122	62.00	164	55.00		
39	84.00	81	71.00	123	62.00	165	55.00		
40	83.00	82	71.00	124	62.00	166	55.00		
41	83.00	83	71.00	125	62.00	167	54.00		
42	83.00	84	70.00	126	61.00	168	54.00		
43	82.00	85	70.00	127	61.00	169	54.00		
44	82.00	86	70.00	128	61.00	170	54.00		
45	82.00	87	70.00	129	61.00	171	54.00		
46	81.00	88	69.00	130	61.00	172	54.00		
47	81.00	89	69.00	131	60.00	173	54.00		
48	81.00	90	69.00	132	60.00	174	53.00		
49	80.00	91	69.00	133	60.00	175	53.00		

Description	Rate		DPR
20 PRISCILLA LANE	125,000.00	ea	0.00
320 ROCKINGHAM RD	100,000.00	ea	0.00
79-F FARM STRUCTURE	0.00	sf	0.00
88 PRISCILLA CONDO	35,000.00	ea	0.00
BARN-1STRY	15.00	sf	40.00
BARN-1STRY/BSMT	17.00	sf	40.00
BARN-1STY/LOFT	19.00	sf	40.00
BARN-1STY/LOFT/BSMT	21.00	sf	40.00
BARN-2STY	18.00	sf	40.00
BARN-2STY/BSMT	20.00	sf	40.00
BARN-2STY/LOFT	21.00	sf	40.00
BARN-2STY/LOFT/BSMT	23.00	sf	40.00
BATH HOUSE	20.00	sf	50.00
BERRY PATCH LANE	5,000.00	ea	0.00
BOAT DOCKS	10.00	sf	0.00
BOAT HOUSE	30.00	sf	75.00
CABIN	25.00	sf	75.00
CAMBRIDGE COMMON	5,000.00	ea	0.00
CANOPY	23.00	sf	0.00
CARPORT METAL	8.00	sf	50.00
CARPORT WOOD	11.00	sf	50.00
COLD STORAGE	45.00	sf	0.00
CONCRETE SLAB	3.00	sf	0.00
COOPS-POULTRY	5.50	sf	40.00
CRICKET COMMON	5,000.00	ea	0.00
DECK	7.00	sf	50.00
F/W TANK, GALLONS	2.00	ea	0.00
FENCE COMMERCIAL/FT	15.00	ea	0.00
FIREPLACE 1-CUST	5,000.00	ea	0.00
FIREPLACE 1-STAND	3,000.00	ea	0.00
FIREPLACE 2-CUST	8,500.00	ea	0.00
FIREPLACE 2-STAND	5,000.00	ea	0.00
FIREPLACE 3-CUST	12,000.00	ea	0.00
FIREPLACE 3-STAND	6,500.00	ea	0.00
FIREPLACE 4-CUST	15,000.00	ea	0.00
FIREPLACE 4-STAND	8,000.00	ea	0.00
FIREPLACE 5-CUST	17,500.00	ea	0.00
FIREPLACE 5-STAND	9,500.00	ea	0.00
FIREPLACE 6-CUST	19,000.00	ea	0.00
FIREPLACE 6-STAND	11,000.00	ea	0.00
FOREST	5,000.00	ea	0.00
FOUNDATION	10.00	sf	60.00
GARAGE-1 STY	22.00	sf	60.00
GARAGE-1 STY/ATTIC	24.00	sf	60.00
GARAGE-1 STY/BSMT	31.00	sf	60.00
GARAGE-1.5 STY	26.00	sf	0.00
GARAGE-1.5 STY/BSMT	35.00	sf	0.00
GARAGE-1.75 STY	27.00	sf	0.00
GARAGE-1.75 STY/BSMT	36.00	sf	0.00
GARAGE-2 STY	28.00	sf	60.00
GARAGE-2 STY/BSMT	37.00	sf	60.00
GARAGE-ATTIC/BSMT	33.00	sf	60.00
GAZEBO	12.00	sf	75.00
GENERATOR	0.00	ea	0.00
GREENHOUSE-GLASS	24.00	sf	0.00
GREENHOUSE-POLY	16.00	sf	0.00
GRIFFIN QUARRY	5,000.00	ea	0.00
HAWTHORNE DR	5,000.00	ea	0.00
HEARTH	1,500.00	ea	0.00
HISTORIC BARN	0.00	ea	0.00
HOT TUB	1,500.00	ea	0.00
ILLSLEY HILLS	5,000.00	ea	0.00
KENNELS	12.00	sf	50.00
LEAN-TO	4.00	sf	50.00
LIFTS-COMMERCIAL	2,800.00	ea	60.00
LIGHTS-PARKING LOT	1,500.00	ea	0.00
LOADING DOCKS	35.00	sf	0.00
PATIO	7.00	sf	50.00
PAVING	3.25	sf	60.00
POLE BARN	8.00	sf	0.00
POOL-ABOVE GROUND	3.00	sf	60.00
POOL-ENCLOSED	30.00	sf	0.00
POOL-INGRND-GUNITE	33.00	sf	60.00
POOL-INGRND-VINYL	28.00	sf	60.00

Description	Rate		DPR
PUMP-GAS/OIL-DOUBLE	3,500.00	ea	75.00
PUMP-GAS/OIL-SINGLE	1,600.00	ea	75.00
PUMP-MIXING	2,500.00	ea	75.00
RIDING ARENA	18.00	sf	75.00
SAUNA	28.00	sf	50.00
SCREENHOUSE	7.00	sf	50.00
SHED-EQUIPMENT	8.00	sf	50.00
SHED-METAL	2.50	sf	60.00
SHED-WOOD	3.50	sf	50.00
SHOP-AVE	18.00	sf	0.00
SHOP-EX	25.00	sf	0.00
SHOP-GOOD	21.00	sf	0.00
SILO-BRICK	32.00	sf	0.00
SILO-CONCRETE	27.00	sf	40.00
SILO-STEEL	32.00	sf	40.00
SILO-WOOD	22.00	sf	40.00
SPRINKLER HEADS	150.00	ea	75.00
STABLES	18.00	sf	50.00
SUTTON CIRCLE CONDO	100,000.00	ea	0.00
TANKS-FUEL/WATER	3.00	ea	0.00
TENNIS COURT(S)	18,000.00	ea	50.00
VAULTS	110.00	sf	75.00
WETHERSFIELD	5,000.00	ea	0.00
WILLOWCOURT COMMON	5,000.00	ea	0.00

Auburn

Features & Outbuildings Size Adjustment Factors

Area	Adj.	Area	Adj.	Area	Adj.	Area	Adj.	Area	Adj.
	4.00	165	1.57	285	1.16	495	0.92	1,885	0.68
50	3.80	170	1.54	290	1.15	510	0.91	2,135	0.67
55	3.51	175	1.51	295	1.14	525	0.90	2,465	0.66
60	3.27	180	1.49	300	1.13	545	0.89	2,910	0.65
65	3.06	185	1.46	305	1.12	565	0.88	3,560	0.64
70	2.89	190	1.44	315	1.11	585	0.87	4,575	0.63
75	2.73	195	1.42	320	1.10	605	0.86	6,405	0.62
80	2.60	200	1.40	325	1.09	630	0.85	10,670	0.61
85	2.48	205	1.38	330	1.08	655	0.84	32,000	0.60
90	2.38	210	1.36	340	1.07	685	0.83		
95	2.28	215	1.34	345	1.06	715	0.82		
100	2.20	220	1.33	355	1.05	745	0.81		
105	2.12	225	1.31	360	1.04	785	0.80		
110	2.05	230	1.30	370	1.03	825	0.79		
115	1.99	235	1.28	380	1.02	865	0.78		
120	1.93	240	1.27	390	1.01	915	0.77		
125	1.88	245	1.25	400	1.00	970	0.76		
130	1.83	250	1.24	410	0.99	1,035	0.75		
135	1.79	255	1.23	420	0.98	1,105	0.74		
140	1.74	260	1.22	430	0.97	1,190	0.73		
145	1.70	265	1.20	440	0.96	1,280	0.72		
150	1.67	270	1.19	455	0.95	1,395	0.71		
155	1.63	275	1.18	465	0.94	1,525	0.70		
160	1.60	280	1.17	480	0.93	1,685	0.69		

Building Base Rate Codes & Values

Code	Description	Stand. Dpr.	Rate	SA
CAP	APARTMENTS	1.25	80.00	COM
CBA	BANKS	1.00	100.00	COM
CCD	CAR DEALER	1.25	72.00	COM
CCS	CONVENIENCE STORES	1.00	70.00	COM
CDO	DORMITORIES	1.50	75.00	COM
CFA	FACTORIES	1.25	60.00	COM
CFF	FAST FOOD/ DRIVE INS	1.25	80.00	RES
CHM	HOTEL/ MOTEL	1.25	70.00	COM
CHO	HOSPITALS	1.00	100.00	COM
CID	INDUSTRIALS	1.25	36.00	COM
CIN	INN/ BED&BREAKFAST	1.00	78.00	COM
CLC	LODGE/ CLUBS	1.00	72.00	COM
CLM	LIGHT MANUFACTURING	1.25	50.00	COM
CMA	MALLS/ SHOP CENTERS	1.25	85.00	COM
CMH	MOBILE HOME	3.00	50.00	MFH
CMW	MINI WAREHOUSE	1.25	28.00	COM
COF	OFFICES	1.00	82.00	COM
CPE	PRIVATE EDUCATION	1.00	62.00	RES
CRS	RESTAURANTS	1.00	80.00	COM
CSG	SERVICE GARAGE	1.50	40.00	COM
CST	STORES	1.00	70.00	COM
CSU	OFFICE CONVERSION	1.50	65.00	RES
CWH	WAREHOUSE	1.50	25.00	IND
EXC	CHURCHES	1.00	75.00	RES
EXF	FIRESTATION BLDGS	1.00	50.00	RES
EXH	EXEMPT HOUSING	1.00	62.00	RES
EXM	MUNICIPAL BUILDINGS	1.00	60.00	RES
EXP	POLICE STATION	1.00	75.00	RES
EXR	CHURCH RECTORY	1.50	60.00	RES
EXS	SCHOOLS/ COLLEGES	1.00	90.00	COM
EXT	EXEMPT TRAILERS	3.00	50.00	MFH
MHD	DOUBLE WIDE MH	1.00	60.00	RES
MHS	MOBILE HOMES	3.00	50.00	MFH
MRV	RV/CAMPER	6.25	40.00	MFH
RCD	CONDOMINIUMS	1.00	60.00	RES
RCP	CAMPS	1.00	48.00	RES
RCT	CONDO TOWNHOUSES	1.00	60.00	RES
RSA	RESIDENTIAL	1.50	60.00	RES

Building Sub Area Codes & Values

Code	Description	Factor
ATF	ATTIC FINISHED	0.25
ATU	ATTIC UNFINISHED	0.10
BMF	BSMNT FINISHED	0.30
BMG	BASEMENT GARAGE	0.20
BMU	BSMNT UNFINISHED	0.15
COF	COM OFFICE AREA	1.75
CPT	CARPORT ATTACHED	0.10
CRL	CRAWL SPACE	0.05
CTH	CATHEDRAL CEILING	0.10
DEK	DECK/ENTRANCE	0.10
ENT	ENTRANCE	0.10
EPF	ENCLSD PORCH	0.70
EPU	COVERED BASEMENT ENT	0.35
FFF	FST FLR FIN	1.00
FFU	FST FLR UNFIN	0.60
GAR	GARAGE ATTACHED	0.45
HSF	1/2 STRY FIN	0.50
HSU	1/2 STRY UNFIN	0.25
LDK	LOADING AREA	0.20
OFF	OFFICE AREA	1.00
OPF	OPEN PORCH	0.25
PAT	PATIO	0.10
PRS	PIER FOUNDATION	-0.05
RBF	RAISED BSMNT FIN	0.50
RBU	RAISED BSMNT UNFIN	0.25
SFA	SEMI-FINISH AREA	0.75
SLB	SLB FOUNDATION	0.00
STO	STORAGE AREA	0.25
TQF	3/4 STRY FIN	0.75
TQU	3/4 STRY UNFIN	0.35
UFF	UPPER FLR FIN	1.00
UFU	UPPER FLR UNFIN	0.50
VLT	VAULTED CEILING	0.05

Building Quality Adjustments

Code	Description	Factor
A0	AVG	1.00
A1	AVG+10	1.10
A2	AVG+20	1.20
A3	AVG+30	1.30
B1	AVG-10	0.90
B2	AVG-20	0.80
B5	BARE MINIMUM	0.50
B4	BELOW MINIMUM	0.60
A4	EXC	1.40
A5	EXC+10	1.50
A6	EXC+20	1.60
A7	EXC+40	1.80
A8	EXC+60	2.00
A9	LUXURIOUS	2.50
B3	MINIMUM	0.70
AA	SPECIAL USE	3.00

Building Story Codes & Values

Code	Description	Factor
A	1.00 STORY FRAME	1.00
B	1.50 STORY FRAME	0.99
C	1.75 STORY FRAME	0.98
D	2.00 STORY FRAME	0.98
E	2.50 STORY FRAME	0.98
F	2.75 STORY FRAME	0.95
G	3.00 STORY FRAME	0.95
H	3.50+ STORY FRAME	0.94
I	SPLIT LEVEL	0.90

Building Roof Structures

Code	Description	Points
A	FLAT	2.00
B	SHED	2.00
C	GABLE OR HIP	3.00
D	WOOD TRUSS	4.00
E	SALT BOX	4.00
F	MANSARD	5.00
G	GAMBREL	5.00
H	IRREGULAR	6.00

Building Roof Materials

Code	Description	Points
A	METAL/TIN	2.00
B	ROLLED/COMPO	2.00
C	ASPHALT	3.00
D	TAR/GRAVEL	3.00
E	ASBEST PNL	3.00
F	ASBEST SHNGL	3.00
G	CLAY/TILE	7.00
H	WD SHINGLE	5.00
I	SLATE	6.00
J	CORRUGATED COMP	3.00
K	PREFAB METALS	6.00
L	RUBBER MEMBRANE	5.00
M	STANDING SEAM	6.00
N	HIGH QUALITY COMP	7.00

Building Exterior Wall Materials

Code	Description	Points
1	CEMENT CLAPBOARD	36.00
2	DECORATIVE BLOCK	36.00
A	MINIMUM	18.00
B	BELOW AVG	24.00
C	NOVELTY	34.00
D	AVERAGE	34.00
E	BOARD/BATTEN	34.00
F	ASBEST SHNGL	32.00
G	LOGS	34.00
H	ABOVE AVG	37.00
I	CLAP BOARD	34.00
J	CEDAR/REDWD	37.00
K	PREFAB WD PNL	32.00
L	WOOD SHINGLE	34.00
M	CNCRT OR BLK	28.00
N	CB STUCCO	34.00
O	ASPHALT	30.00
P	BRK VENEER	37.00
Q	BR ON MASONRY	40.00
R	STN ON MASONRY	42.00
S	VINYL SIDING	35.00
T	ALUM SIDING	35.00
U	PREFIN METAL	38.00
V	GLASS/THERMO	40.00
X	MASONITE	28.00

Building Frame Materials

Code	Description	Factor
A	WOOD	90.00
B	MASONRY	100.00
C	REIN-CONCRETE	110.00
D	STEEL	100.00
E	SPECIAL	115.00

Building Interior Wall Materials

Code	Description	Points
A	MINIMUM	8.00
B	WALL BOARD	22.00
C	PLASTERED	27.00
D	DRYWALL	27.00
E	WOOD PANEL	30.00
F	PLYWOOD PANEL	27.00
G	WOOD/LOG	30.00
H	AVERAGE FOR USE	22.00

Building Interior Floor Materials

Code	Description	Points
A	MIN PLYWD	5.00
B	CONCRETE	6.00
C	HARD TILE	12.00
D	LINOLEUM/VINYL	7.00
E	PINE/SOFT WD	9.00
F	HARDWOOD	10.00
G	PARQUET	11.00
H	CARPET	10.00
P	PERGO/LAMINATE	8.00

Building Heating Fuel Types

Code	Description	Points
A	WOOD/COAL	0.50
B	OIL	1.00
C	GAS	1.00
D	ELECTRIC	1.00
E	SOLAR	1.10

Building Heating System Types

Code	Description	Points
A	NONE	0.00
B	CONVECTION	2.00
C	FA NO DUCTS	3.00
D	FA DUCTED	6.00
E	HOT WATER	6.00
F	STEAM	5.00
G	RAD ELECT	3.00
H	RAD WATER	6.00
I	CERAMIC QUATZ	4.00
J	HEAT PUMP	6.00
K	WALL/FLR FURNACE	6.00

Building Air Conditioning

Central Air Conditioning Points: 4

Building Bedroom & Bathroom Points

Bathrooms	Bedrooms: 0	1	2	3	4	> 4
0.0	0	2	3	4	5	6
0.5	6	7	7	8	8	9
1.0	9	10	10	11	11	12
1.5	12	11	12	13	14	15
2.0	13	12	13	14	15	16
2.5	14	13	13	14	15	16
3.0	15	14	14	15	16	17
3.5	16	14	14	15	16	17
4.0	17	14	15	16	17	18
> 4.0	18	14	15	16	17	18

Extra Kitchen Point Value = 2
Electric Generator Point Value = 2

Standard Age Only Building Depreciation Schedule

Building Age Condition Classifications

Age	Very Poor	Poor	Fair	Average	Good	Very Good	Excellent
1	5	4	3	1	1	1	1
5	11	9	7	5	4	3	2
10	16	13	9	8	6	5	3
15	19	15	12	10	8	6	4
20	22	18	13	11	9	7	4
30	27	22	16	14	11	8	5
40	32	25	19	16	13	9	6
50	35	28	21	18	14	11	7
60	39	31	23	19	15	12	8
70	42	33	25	21	17	13	8
80	45	36	27	22	18	13	9
90	47	38	28	24	19	14	9
100	50	40	30	25	20	15	10
125	56	45	34	28	22	17	11
150	61	49	37	31	24	18	12
175	66	53	40	33	26	20	13
200	71	57	42	35	28	21	14
225	75	60	45	38	30	23	15
250	79	63	47	40	32	24	16
275	83	66	50	41	33	25	17
300	87	69	52	43	35	26	17

Depreciation can also be added for physical, functional, or economic reasons or conditions over and above the normal age depreciation.

The standard age depreciation can be further adjusted based on the standard depreciation rate of various buildings. The standard depreciation rate of residential buildings is typically 1%, while manufactured housing might be 3%. As such, a 10 year-old house in good condition would have 6% total depreciation, while similar manuafactured homes would have 18% depreciation. See Building Base Rate Codes & Values chart for unique depreciation by building type.

Auburn

Residential Building Area Size Adjustment Factors

Median Effective Area = 2200sf Fixed Site Cost Adjustment = 25%

Size	Adj.	Size	Adj.	Size	Adj.	Size	Adj.	Size	Adj.
169	4.00	234	3.10	324	2.45	524	1.80	1,375	1.15
170	3.99	235	3.09	325	2.44	529	1.79	1,410	1.14
171	3.97	236	3.08	327	2.43	534	1.78	1,447	1.13
172	3.95	237	3.07	329	2.42	539	1.77	1,486	1.12
173	3.93	238	3.06	331	2.41	545	1.76	1,528	1.11
174	3.92	239	3.05	333	2.40	550	1.75	1,571	1.10
175	3.90	240	3.04	335	2.39	556	1.74	1,618	1.09
176	3.88	241	3.03	337	2.38	561	1.73	1,667	1.08
177	3.86	242	3.02	340	2.37	567	1.72	1,719	1.07
178	3.84	243	3.01	342	2.36	573	1.71	1,774	1.06
179	3.83	244	3.00	344	2.35	579	1.70	1,833	1.05
180	3.81	246	2.99	346	2.34	585	1.69	1,897	1.04
181	3.79	247	2.98	348	2.33	591	1.68	1,964	1.03
182	3.78	248	2.97	350	2.32	598	1.67	2,037	1.02
183	3.76	249	2.96	353	2.31	604	1.66	2,115	1.01
184	3.74	250	2.95	355	2.30	611	1.65	2,200	1.00
185	3.73	251	2.94	357	2.29	618	1.64	2,292	0.99
186	3.71	252	2.93	359	2.28	625	1.63	2,391	0.98
187	3.69	253	2.92	362	2.27	632	1.62	2,500	0.97
188	3.68	255	2.91	364	2.26	640	1.61	2,619	0.96
189	3.66	256	2.90	367	2.25	647	1.60	2,750	0.95
190	3.65	257	2.89	369	2.24	655	1.59	2,895	0.94
191	3.63	258	2.88	372	2.23	663	1.58	3,056	0.93
192	3.62	259	2.87	374	2.22	671	1.57	3,235	0.92
193	3.60	261	2.86	377	2.21	679	1.56	3,437	0.91
194	3.59	262	2.85	379	2.20	687	1.55	3,667	0.90
195	3.57	263	2.84	382	2.19	696	1.54	3,929	0.89
196	3.56	264	2.83	385	2.18	705	1.53	4,231	0.88
197	3.54	266	2.82	387	2.17	714	1.52	4,583	0.87
198	3.53	267	2.81	390	2.16	724	1.51	5,000	0.86
199	3.52	268	2.80	393	2.15	733	1.50	5,500	0.85
200	3.50	270	2.79	396	2.14	743	1.49	6,111	0.84
201	3.49	271	2.78	399	2.13	753	1.48	6,875	0.83
202	3.47	272	2.77	401	2.12	764	1.47	7,857	0.82
203	3.46	274	2.76	404	2.11	775	1.46	9,167	0.81
204	3.45	275	2.75	407	2.10	786	1.45	11,000	0.80
205	3.43	276	2.74	410	2.09	797	1.44	13,750	0.79
206	3.42	278	2.73	414	2.08	809	1.43	18,333	0.78
207	3.41	279	2.72	417	2.07	821	1.42	27,500	0.77
208	3.40	281	2.71	420	2.06	833	1.41	55,000	0.76
209	3.38	282	2.70	423	2.05	846	1.40	100,000	0.76
210	3.37	284	2.69	426	2.04	859	1.39	200,000	0.7528
211	3.36	285	2.68	430	2.03	873	1.38	300,000	0.7518
212	3.35	286	2.67	433	2.02	887	1.37	400,000	0.7514
213	3.33	288	2.66	437	2.01	902	1.36	500,000	0.7511
214	3.32	289	2.65	440	2.00	917	1.35	600,000	0.7509
215	3.31	291	2.64	444	1.99	932	1.34	700,000	0.7508
216	3.30	293	2.63	447	1.98	948	1.33	800,000	0.7507
217	3.29	294	2.62	451	1.97	965	1.32	900,000	0.7506
218	3.27	296	2.61	455	1.96	982	1.31	1,000,000	0.7506
219	3.26	297	2.60	458	1.95	1,000	1.30		
220	3.25	299	2.59	462	1.94	1,019	1.29		
221	3.24	301	2.58	466	1.93	1,038	1.28		
222	3.23	302	2.57	470	1.92	1,058	1.27		
223	3.22	304	2.56	474	1.91	1,078	1.26		
224	3.21	306	2.55	478	1.90	1,100	1.25		
225	3.19	307	2.54	482	1.89	1,122	1.24		
226	3.18	309	2.53	487	1.88	1,146	1.23		
227	3.17	311	2.52	491	1.87	1,170	1.22		
228	3.16	313	2.51	495	1.86	1,196	1.21		
229	3.15	314	2.50	500	1.85	1,222	1.20		
230	3.14	316	2.49	505	1.84	1,250	1.19		
231	3.13	318	2.48	509	1.83	1,279	1.18		
232	3.12	320	2.47	514	1.82	1,310	1.17		
233	3.11	322	2.46	519	1.81	1,341	1.16		

Auburn

Commercial Building Area Size Adjustment Factors

Median Effective Area = 4000sf Fixed Site Cost Adjustment = 25%

Size	Adj.	Size	Adj.	Size	Adj.	Size	Adj.	Size	Adj.
308	4.00	394	3.29	543	2.59	877	1.89	2,273	1.19
309	3.99	395	3.28	546	2.58	885	1.88	2,326	1.18
310	3.98	397	3.27	549	2.57	893	1.87	2,381	1.17
311	3.97	398	3.26	552	2.56	901	1.86	2,439	1.16
312	3.96	400	3.25	556	2.55	909	1.85	2,500	1.15
313	3.94	402	3.24	559	2.54	917	1.84	2,564	1.14
314	3.93	403	3.23	562	2.53	926	1.83	2,632	1.13
315	3.92	405	3.22	565	2.52	935	1.82	2,703	1.12
316	3.91	407	3.21	568	2.51	943	1.81	2,778	1.11
317	3.90	408	3.20	571	2.50	952	1.80	2,857	1.10
318	3.89	410	3.19	575	2.49	962	1.79	2,941	1.09
319	3.88	412	3.18	578	2.48	971	1.78	3,030	1.08
321	3.87	413	3.17	581	2.47	980	1.77	3,125	1.07
322	3.86	415	3.16	585	2.46	990	1.76	3,226	1.06
323	3.85	417	3.15	588	2.45	1,000	1.75	3,333	1.05
324	3.84	418	3.14	592	2.44	1,010	1.74	3,448	1.04
325	3.83	420	3.13	595	2.43	1,020	1.73	3,571	1.03
326	3.82	422	3.12	599	2.42	1,031	1.72	3,704	1.02
327	3.81	424	3.11	602	2.41	1,042	1.71	3,846	1.01
328	3.80	426	3.10	606	2.40	1,053	1.70	4,000	1.00
329	3.79	427	3.09	610	2.39	1,064	1.69	4,167	0.99
330	3.78	429	3.08	613	2.38	1,075	1.68	4,348	0.98
331	3.77	431	3.07	617	2.37	1,087	1.67	4,545	0.97
332	3.76	433	3.06	621	2.36	1,099	1.66	4,762	0.96
333	3.75	435	3.05	625	2.35	1,111	1.65	5,000	0.95
334	3.74	437	3.04	629	2.34	1,124	1.64	5,263	0.94
336	3.73	439	3.03	633	2.33	1,136	1.63	5,556	0.93
337	3.72	441	3.02	637	2.32	1,149	1.62	5,882	0.92
338	3.71	442	3.01	641	2.31	1,163	1.61	6,250	0.91
339	3.70	444	3.00	645	2.30	1,176	1.60	6,667	0.90
340	3.69	446	2.99	649	2.29	1,190	1.59	7,143	0.89
341	3.68	448	2.98	654	2.28	1,205	1.58	7,692	0.88
342	3.67	450	2.97	658	2.27	1,220	1.57	8,333	0.87
344	3.66	452	2.96	662	2.26	1,235	1.56	9,091	0.86
345	3.65	455	2.95	667	2.25	1,250	1.55	10,000	0.85
346	3.64	457	2.94	671	2.24	1,266	1.54	11,111	0.84
347	3.63	459	2.93	676	2.23	1,282	1.53	12,500	0.83
348	3.62	461	2.92	680	2.22	1,299	1.52	14,286	0.82
350	3.61	463	2.91	685	2.21	1,316	1.51	16,667	0.81
351	3.60	465	2.90	690	2.20	1,333	1.50	20,000	0.80
352	3.59	467	2.89	694	2.19	1,351	1.49	25,000	0.79
353	3.58	469	2.88	699	2.18	1,370	1.48	33,333	0.78
355	3.57	472	2.87	704	2.17	1,389	1.47	50,000	0.77
356	3.56	474	2.86	709	2.16	1,408	1.46	100,000	0.76
357	3.55	476	2.85	714	2.15	1,429	1.45	200,000	0.7550
358	3.54	478	2.84	719	2.14	1,449	1.44	300,000	0.7533
360	3.53	481	2.83	725	2.13	1,471	1.43	400,000	0.7525
361	3.52	483	2.82	730	2.12	1,493	1.42	500,000	0.7520
362	3.51	485	2.81	735	2.11	1,515	1.41	600,000	0.7517
364	3.50	488	2.80	741	2.10	1,538	1.40	700,000	0.7514
365	3.49	490	2.79	746	2.09	1,563	1.39	800,000	0.7512
366	3.48	493	2.78	752	2.08	1,587	1.38	900,000	0.7511
368	3.47	495	2.77	758	2.07	1,613	1.37	1,000,000	0.7510
369	3.46	498	2.76	763	2.06	1,639	1.36		
370	3.45	500	2.75	769	2.05	1,667	1.35		
372	3.44	503	2.74	775	2.04	1,695	1.34		
373	3.43	505	2.73	781	2.03	1,724	1.33		
375	3.42	508	2.72	787	2.02	1,754	1.32		
376	3.41	510	2.71	794	2.01	1,786	1.31		
377	3.40	513	2.70	800	2.00	1,818	1.30		
379	3.39	515	2.69	806	1.99	1,852	1.29		
380	3.38	518	2.68	813	1.98	1,887	1.28		
382	3.37	521	2.67	820	1.97	1,923	1.27		
383	3.36	524	2.66	826	1.96	1,961	1.26		
385	3.35	526	2.65	833	1.95	2,000	1.25		
386	3.34	529	2.64	840	1.94	2,041	1.24		
388	3.33	532	2.63	847	1.93	2,083	1.23		
389	3.32	535	2.62	855	1.92	2,128	1.22		
391	3.31	538	2.61	862	1.91	2,174	1.21		
392	3.30	541	2.60	870	1.90	2,222	1.20		

Auburn

Industrial Building Area Size Adjustment Factors

Median Effective Area = 8000sf Fixed Site Cost Adjustment = 25%

Size	Adj.	Size	Adj.	Size	Adj.	Size	Adj.	Size	Adj.
615	4.00	784	3.30	1,081	2.60	1,739	1.90	4,444	1.20
617	3.99	787	3.29	1,087	2.59	1,754	1.89	4,545	1.19
619	3.98	791	3.28	1,093	2.58	1,770	1.88	4,651	1.18
621	3.97	794	3.27	1,099	2.57	1,786	1.87	4,762	1.17
623	3.96	797	3.26	1,105	2.56	1,802	1.86	4,878	1.16
625	3.95	800	3.25	1,111	2.55	1,818	1.85	5,000	1.15
627	3.94	803	3.24	1,117	2.54	1,835	1.84	5,128	1.14
629	3.93	806	3.23	1,124	2.53	1,852	1.83	5,263	1.13
631	3.92	810	3.22	1,130	2.52	1,869	1.82	5,405	1.12
633	3.91	813	3.21	1,136	2.51	1,887	1.81	5,556	1.11
635	3.90	816	3.20	1,143	2.50	1,905	1.80	5,714	1.10
637	3.89	820	3.19	1,149	2.49	1,923	1.79	5,882	1.09
639	3.88	823	3.18	1,156	2.48	1,942	1.78	6,061	1.08
641	3.87	826	3.17	1,163	2.47	1,961	1.77	6,250	1.07
643	3.86	830	3.16	1,170	2.46	1,980	1.76	6,452	1.06
645	3.85	833	3.15	1,176	2.45	2,000	1.75	6,667	1.05
647	3.84	837	3.14	1,183	2.44	2,020	1.74	6,897	1.04
649	3.83	840	3.13	1,190	2.43	2,041	1.73	7,143	1.03
651	3.82	844	3.12	1,198	2.42	2,062	1.72	7,407	1.02
654	3.81	847	3.11	1,205	2.41	2,083	1.71	7,692	1.01
656	3.80	851	3.10	1,212	2.40	2,105	1.70	8,000	1.00
658	3.79	855	3.09	1,220	2.39	2,128	1.69	8,333	0.99
660	3.78	858	3.08	1,227	2.38	2,151	1.68	8,696	0.98
662	3.77	862	3.07	1,235	2.37	2,174	1.67	9,091	0.97
664	3.76	866	3.06	1,242	2.36	2,198	1.66	9,524	0.96
667	3.75	870	3.05	1,250	2.35	2,222	1.65	10,000	0.95
669	3.74	873	3.04	1,258	2.34	2,247	1.64	10,526	0.94
671	3.73	877	3.03	1,266	2.33	2,273	1.63	11,111	0.93
673	3.72	881	3.02	1,274	2.32	2,299	1.62	11,765	0.92
676	3.71	885	3.01	1,282	2.31	2,326	1.61	12,500	0.91
678	3.70	889	3.00	1,290	2.30	2,353	1.60	13,333	0.90
680	3.69	893	2.99	1,299	2.29	2,381	1.59	14,286	0.89
683	3.68	897	2.98	1,307	2.28	2,410	1.58	15,385	0.88
685	3.67	901	2.97	1,316	2.27	2,439	1.57	16,667	0.87
687	3.66	905	2.96	1,325	2.26	2,469	1.56	18,182	0.86
690	3.65	909	2.95	1,333	2.25	2,500	1.55	20,000	0.85
692	3.64	913	2.94	1,342	2.24	2,532	1.54	22,222	0.84
694	3.63	917	2.93	1,351	2.23	2,564	1.53	25,000	0.83
697	3.62	922	2.92	1,361	2.22	2,597	1.52	28,571	0.82
699	3.61	926	2.91	1,370	2.21	2,632	1.51	33,333	0.81
702	3.60	930	2.90	1,379	2.20	2,667	1.50	40,000	0.80
704	3.59	935	2.89	1,389	2.19	2,703	1.49	50,000	0.79
707	3.58	939	2.88	1,399	2.18	2,740	1.48	66,667	0.78
709	3.57	943	2.87	1,408	2.17	2,778	1.47	100,000	0.77
712	3.56	948	2.86	1,418	2.16	2,817	1.46	200,000	0.7600
714	3.55	952	2.85	1,429	2.15	2,857	1.45	300,000	0.7567
717	3.54	957	2.84	1,439	2.14	2,899	1.44	400,000	0.7550
719	3.53	962	2.83	1,449	2.13	2,941	1.43	500,000	0.7540
722	3.52	966	2.82	1,460	2.12	2,985	1.42	600,000	0.7533
725	3.51	971	2.81	1,471	2.11	3,030	1.41	700,000	0.7529
727	3.50	976	2.80	1,481	2.10	3,077	1.40	800,000	0.7525
730	3.49	980	2.79	1,493	2.09	3,125	1.39	900,000	0.7522
733	3.48	985	2.78	1,504	2.08	3,175	1.38	1,000,000	0.7520
735	3.47	990	2.77	1,515	2.07	3,226	1.37		
738	3.46	995	2.76	1,527	2.06	3,279	1.36		
741	3.45	1,000	2.75	1,538	2.05	3,333	1.35		
743	3.44	1,005	2.74	1,550	2.04	3,390	1.34		
746	3.43	1,010	2.73	1,563	2.03	3,448	1.33		
749	3.42	1,015	2.72	1,575	2.02	3,509	1.32		
752	3.41	1,020	2.71	1,587	2.01	3,571	1.31		
755	3.40	1,026	2.70	1,600	2.00	3,636	1.30		
758	3.39	1,031	2.69	1,613	1.99	3,704	1.29		
760	3.38	1,036	2.68	1,626	1.98	3,774	1.28		
763	3.37	1,042	2.67	1,639	1.97	3,846	1.27		
766	3.36	1,047	2.66	1,653	1.96	3,922	1.26		
769	3.35	1,053	2.65	1,667	1.95	4,000	1.25		
772	3.34	1,058	2.64	1,681	1.94	4,082	1.24		
775	3.33	1,064	2.63	1,695	1.93	4,167	1.23		
778	3.32	1,070	2.62	1,709	1.92	4,255	1.22		
781	3.31	1,075	2.61	1,724	1.91	4,348	1.21		

Auburn

Manufactured Building Area Size Adjustment Factors

Median Effective Area = 300sf Fixed Site Cost Adjustment = 25%

Size	Adj.	Size	Adj.	Size	Adj.	Size	Adj.	Size	Adj.
23	4.00	58	2.05	94	1.55	167	1.20	750	0.85
24	3.94	59	2.03	95	1.54	170	1.19	833	0.84
25	3.81	60	2.01	96	1.53	174	1.18	938	0.83
26	3.69	61	1.98	97	1.52	179	1.17	1,071	0.82
27	3.58	62	1.96	99	1.51	183	1.16	1,250	0.81
28	3.47	63	1.95	100	1.50	188	1.15	1,500	0.80
29	3.38	64	1.93	101	1.49	192	1.14	1,875	0.79
30	3.29	65	1.91	103	1.48	197	1.13	2,500	0.78
31	3.20	66	1.89	104	1.47	203	1.12	3,750	0.77
32	3.13	67	1.87	106	1.46	208	1.11	7,500	0.76
33	3.05	68	1.86	107	1.45	214	1.10	100,000	0.75
34	2.98	69	1.84	109	1.44	221	1.09	200,000	0.7504
35	2.92	70	1.82	110	1.43	227	1.08	300,000	0.7502
36	2.86	71	1.81	112	1.42	234	1.07	400,000	0.7502
37	2.80	72	1.79	114	1.41	242	1.06	500,000	0.7501
38	2.75	73	1.78	115	1.40	250	1.05	600,000	0.7501
39	2.69	74	1.77	117	1.39	259	1.04	700,000	0.7501
40	2.64	75	1.75	119	1.38	268	1.03	800,000	0.7501
41	2.60	76	1.74	121	1.37	278	1.02	900,000	0.7501
42	2.55	77	1.73	123	1.36	288	1.01	1,000,000	0.7501
43	2.51	78	1.71	125	1.35	300	1.00		
44	2.47	79	1.70	127	1.34	313	0.99		
45	2.43	80	1.69	129	1.33	326	0.98		
46	2.39	81	1.68	132	1.32	341	0.97		
47	2.36	82	1.67	134	1.31	357	0.96		
48	2.32	83	1.65	136	1.30	375	0.95		
49	2.29	84	1.64	139	1.29	395	0.94		
50	2.26	85	1.63	142	1.28	417	0.93		
51	2.23	86	1.62	144	1.27	441	0.92		
52	2.20	87	1.61	147	1.26	469	0.91		
53	2.17	88	1.60	150	1.25	500	0.90		
54	2.15	89	1.59	153	1.24	536	0.89		
55	2.12	90	1.58	156	1.23	577	0.88		
56	2.10	91	1.57	160	1.22	625	0.87		
57	2.07	93	1.56	163	1.21	682	0.86		

Code	Description
00	INVESTIG IN PROGRESS
11	NOT ASSESSD SEPARATE
12	SUBDIVISN-ASMT/SALE
13	IMPROVED AFTER 4/1
14	IMPROVED AFTER SALE
15	UNDER CONSTRUCTION
16	L/O ASMT - L/B SALE
17	L/B ASMT - L/O SALE
18	MULTI PARCEL SALE
19	VALUE IN EXCHANGE
20	MULTI-TOWN PROPERTY
21	MPC-CAN SELL SEPRTLY
22	UNKNOWN CONSIDERATN
23	NO TRANSFER STAMPS
24	ABUTTER SALE
25	QUICK SALE
26	MINERAL RIGHTS ONLY
27	< 100 % INT TRANSFER
28	LIFE EST/DEFER 1YR+
29	PLOTAGE/ASMBL IMPACT
30	TIMESHARE
31	EASEMENT
32	TIMBER RIGHTS
33	LNDLRD/TENANT SALE
34	PUBLIC UTIL GRNTR/E
35	GOVMT AGENCY GRNTR/E
36	REL/CHAR/EDU GRNTR/E
37	BANK FORECLSR SALE
38	FAMILY/RELAT GRNTR/E
39	DIVORCE PRTY GRNTR/E
40	BUSIN AFFIL GRNTR/E
44	NON MARKET TRANSFER
45	BOUNDARY ADJUSTMT
46	QUITCLAIM DEED
47	OTHR SALE OF CONVENC
48	COURT/SHERIFF SALE
49	PRE-FORECLSR SALE
50	TAX SALE
51	FORECLOSURE
52	FORCED SALE
55	OTHR/UNSPEC DEED COV
56	OTHER DOUBTFUL TITLE
57	LARGE VALUE IN TRADE
58	INSTALLMENT SALE
59	UNFINISH COMMON PROP
60	UNIDENT IN TOWN RECS
66	COMPLEX COMMRCL SALE
67	PERSONAL PROPERTY
68	MORTGAGE UNKNOWN
69	LEASE W/ UNK TERMS
70	BUYR/SELR COST SHIFT
77	ENCUMBRANCES
80	SUBSID/ASSIST HOUSNG
81	ESTATE SALE/FDCY COV
82	DEED DATE OLD/INCMPL
87	XS LOCALE IN SAMPLE
88	XS PRP TYP IN SAMPLE
89	QUICK RESALE
90	CURRENT USE ASSESSMT
97	CONSERVATION EASMNT
98	SALE RELATD ASMT CHG
99	UNCLASSFYD EXCLUSION

SECTION 10

WATERFRONT, VIEW & BUILDING GRADE INFORMATION

A. WATERFRONT

B. VIEW REPORT

C. BUILDING GRADE REPORT

FOLLOWED BY PICTURE CATALOG

A. WATERFRONT

Grading waterfront, although somewhat objective due to the amount of waterfront, topography and presence or lack of a beach, the overall value different buyers are willing to spend for the same property varies dramatically due to individual likes and dislikes making the purchase somewhat emotional and to a degree subjective. This makes the assessing process more subjective than one may like, but it is a fact that buying and selling of property is not 100% objective.

Although the total market value of the property is expressed or displayed in separate parts, such as land, building, views and waterfront, it is the total value of the property that is most important. You may feel the view, waterfront, building or land is high or low, but if the total value represents market value and is equitable with similar properties, then your assessment is reasonable and fair.

The quality and desirability of waterfront varies widely as does the value attributed to various bodies of water and even the same body of water in two different municipalities.

Topography and access to the site, as well as to the waterfront itself varies and can greatly affect the market value. Because of this, it is rare to find two properties that are identical and as such adjustments must be made for water quality and access based on 3rd party data such as, NH DES when sales are lacking or limited.

Despite the possible lack of sales data, the assessor must still produce an equitable opinion of value for each and every property in town; sometimes making subjective adjustments for differences from property to property for what they feel affects the market value positively and/or negatively. This unfortunately may not always be demonstrated in sales data due to the lack of sales, so experience and common sense play a large part in this process, when local direct sales are lacking.

Auburn Waterfront Report

Sorted By Waterfront Value

Map Lot Sub: 000003 000007 000000
Location: LONDONDERRY TURNPIKE
Owner: MANCHESTER WATER WORKS
Waterfront Value: $ 0
Zone: RESIDENTIAL 1 & 2
Land Use: EXEMPT-PILT
Neighborhood: AVG
Notes: WF

Map Lot Sub: 000007 000029 000000
Location: 0014 GRIFFIN MILL ROAD
Owner: GRIFFIN UNDICE E
Waterfront Value: $ 10,000
Zone: COMMERCIAL 1 & 2
Land Use: 1F RES WTRFRNT
Neighborhood: AVG +
Notes: WF

Map Lot Sub: 000007 000029 000001
Location: 0015 GRIFFIN MILL ROAD
Owner: FUSCO, JAMES R
Waterfront Value: $ 10,000
Zone: COMMERCIAL 1 & 2
Land Use: 1F RES WTRFRNT
Neighborhood: AVG +
Notes: WF

Map Lot Sub: 000010 000026 000000
Location: 0049 HOOKSETT ROAD
Owner: GROCHOWSKI KRIS A
Waterfront Value: $ 10,000
Zone: RESIDENTIAL 1 & 2
Land Use: 2F RES WTRFRNT
Neighborhood: AVG
Notes: WF MASSABESIC RVR

Map Lot Sub: 000010 000028 000000
Location: 0051 HOOKSETT ROAD
Owner: CHAMPAGNE SCOTT G
Waterfront Value: $ 20,000
Zone: RESIDENTIAL 1 & 2
Land Use: 1F RES WTRFRNT
Neighborhood: AVG
Notes: WF MASSABESIC RVR

	Date	Book/Page	Type	Price
Most Recent Sale:	03/03/11	5198/1553	Q I	$215,000

Total Current Assessment
$258,600

Map Lot Sub: 000005 000058 000000
Location: 0481 CHESTER ROAD
Owner: BURNHAM, RICHARD J
Waterfront Value: $ 25,000
Zone: RESIDENTIAL 1 & 2
Land Use: 1F RES WTRFRNT
Neighborhood: AVG
Notes: WF

Map Lot Sub: 000005 000058 000001
Location: 0519 CHESTER ROAD
Owner: DOUCET, WILLIAM E
Waterfront Value: $ 25,000
Zone: RESIDENTIAL 1 & 2
Land Use: 1F RES WTRFRNT
Neighborhood: AVG
Notes: WF CALEF POND

Map Lot Sub: 000005 000058 000002
Location: 0507 CHESTER ROAD
Owner: GERLITZ, WAYNE T
Waterfront Value: $ 25,000
Zone: RESIDENTIAL 1 & 2
Land Use: 1F RES WTRFRNT
Neighborhood: AVG
Notes: WF AVEFPOND/NO BCH

Map Lot Sub: 000005 000058 000003
Location: 0495 CHESTER ROAD
Owner: KILEY, RICHARD A
Waterfront Value: $ 25,000
Zone: RESIDENTIAL 1 & 2
Land Use: 1F RES WTRFRNT
Neighborhood: AVG
Notes: WF CALEF POND

Map Lot Sub: 000005 000058 000004
Location: 0487 CHESTER ROAD
Owner: VAILLANCOURT, MURIEL D
Waterfront Value: $ 25,000
Zone: RESIDENTIAL 1 & 2
Land Use: 1F RES WTRFRNT
Neighborhood: AVG
Notes: WF CALEF POND

Map Lot Sub: 000005 000061 000000
Location: CHESTER ROAD
Owner: NGUYEN, KIM H
Waterfront Value: $ 25,000
Zone: RESIDENTIAL 1 & 2
Land Use: 1F RES WTRFRNT
Neighborhood: AVG
Notes: WF

Map Lot Sub: 000005 000071 000012
Location: 0056 MAVERICK DRIVE
Owner: MAMULASHVILI EKATERINA
Waterfront Value: $ 25,000
Zone: RESIDENTIAL 1 & 2
Land Use: 1F RES WTRFRNT
Neighborhood: AVG +30
Notes: WF BEAVER POND

	Date	Book/Page	Type	Price
Most Recent Sale:	05/25/12	5319/1818	Q I	$440,000

Total Current Assessment
$402,800

Map Lot Sub: 000005 000060 000000
Location: 0547 CHESTER ROAD
Owner: BOOTH KENNETH W
Waterfront Value: $ 35,000
Zone: RESIDENTIAL 1 & 2
Land Use: 1F RES WTRFRNT
Neighborhood: AVG
Notes: WF CALEF POND

Map Lot Sub: 000005 000062 000000
Location: 0549 CHESTER ROAD
Owner: WEBSTER HERVEY L & MARION W
Waterfront Value: $ 35,000
Zone: RESIDENTIAL 1 & 2
Land Use: 1F RES WTRFRNT
Neighborhood: AVG
Notes: WF CALEF POND

Map Lot Sub: 000005 000063 000000
Location: 0589 CHESTER ROAD
Owner: HESSE MARK E
Waterfront Value: $ 35,000
Zone: RESIDENTIAL 1 & 2
Land Use: 1F RES WTRFRNT
Neighborhood: AVG
Notes: WF

Map Lot Sub: 000005 000064 000000
Location: 0591 CHESTER ROAD
Owner: COOPER, JR., WILLIAM G AS TRUS
Waterfront Value: $ 35,000
Zone: RESIDENTIAL 1 & 2
Land Use: 1F RES WTRFRNT
Neighborhood: AVG
Notes: WF CALEF POND/BUT

Map Lot Sub: 000005 000071 000013
Location: 0050 MAVERICK DRIVE
Owner: MESSENGER KEVIN T
Waterfront Value: $ 35,000
Zone: RESIDENTIAL 1 & 2
Land Use: 1F RES WTRFRNT
Neighborhood: AVG +30
Notes: WF/VIEWS

Map Lot Sub: 000005 000082 000000
Location: 0530 BUNKER HILL ROAD
Owner: RAMOS RICHARD
Waterfront Value: $ 35,000
Zone: RESIDENTIAL 1 & 2
Land Use: 1F RES WTRFRNT
Neighborhood: AVG
Notes: WF BEAVER POND

Map Lot Sub: 000005 000059 000000
Location: 0529 CHESTER ROAD
Owner: LEWIS, REID B
Waterfront Value: $ 50,000
Zone: RESIDENTIAL 1 & 2
Land Use: 1F RES WTRFRNT
Neighborhood: AVG
Notes: WF CALEF POND BUT

Map Lot Sub: 000005 000082 000001
Location: 0538 BUNKER HILL ROAD
Owner: ORIOL GILBERT
Waterfront Value: $ 50,000
Zone: RESIDENTIAL 1 & 2
Land Use: 1F RES WTRFRNT
Neighborhood: AVG
Notes: WF

Map Lot Sub: 000006 000003 000001
Location: DESCHENES ROAD
Owner: ARCIDY MARK
Waterfront Value: $ 50,000
Zone: RESIDENTIAL 1 & 2
Land Use: 1F RES WTR ACS
Neighborhood: AVG
Notes: WF

Map Lot Sub: 000005 000065 000000
Location: 0593 CHESTER ROAD
Owner: CALEF LAKE CAMPING AREA, LLC
Waterfront Value: $ 100,000
Zone: RESIDENTIAL 1 & 2
Land Use: 1F RES WTRFRNT
Neighborhood: AVG
Notes: WF 1377' CALEF PND

Map Lot Sub: 000006 000002 000000
Location: 0082 DESCHENES ROAD
Owner: INTIMATE FRIENDS SOCIETY
Waterfront Value: $ 100,000
Zone: RESIDENTIAL 1 & 2
Land Use: 1F RES WTRFRNT
Neighborhood: AVG
Notes: WF

Map Lot Sub: 000006 000003 000000
Location: 0052 DESCHENES ROAD
Owner: ARCIDY MARK
Waterfront Value: $ 150,000
Zone: RESIDENTIAL 1 & 2
Land Use: 1F RES WTRFRNT
Neighborhood: AVG
Notes: WF

Map Lot Sub: 000003 000006 000000
Location: LONDONDERRY TURNPIKE
Owner: ANDREW FOX LLC
Waterfront Value: $ 500,000
Zone: RESIDENTIAL 1 & 2
Land Use: 1F RES WTRFRNT
Neighborhood: AVG
Notes: MASSABESIC WF/USE

B. VIEWS

Views, by their nature are subjective. However, isn't buying and selling of real estate also subjective? Is it not all based on the likes and dislikes of the market? And, do we not all like and dislike differently?

While there are some subjective measures involved in buying and selling of real estate, a large portion of the purchase price is based on likes and dislikes and the emotion of the buyer and seller.

Like land and building values, the contributory value of a view is extracted from the actual sales data. If you review Section 7, you can see how these values are developed, when sales data is available. However, it is a known fact and part of historical sales data, that views can and do contribute to the total market value. The lack of sales data in any particular neighborhood of properties with views does not mean views have no contributing value but rather that the need for the use of historic data, experience and common sense must prevail.

Once various views are analyzed and the market contributory value extracted, the assessor can then apply that value whenever the same view occurs, similar to land and building values. That part is easy. It becomes more difficult when more or less substantial views or total different views are found in the town then were found in the sales data. When this occurs, the assessor, using all the sales data available, must then give an opinion of the value of this new view, grading it better or worse than the sales data and making an appropriate value adjustment. Here experience and common sense play a large part in this process.

The following report of all views is provided, to show consistency in the application of views, as well as document the contributory value assessed in each one.

Auburn View Report

Sorted By View Value

Map Lot Sub: 000008 000014 000005
Location: COLEMAN ROAD
Owner: ESPANA BUILDING & DEVELOPMENT
View Value: $ 0
Zone: RESIDENTIAL 1 & 2
Land Use: 1F RES
Neighborhood: AVG +20
Notes: VU CTD

Map Lot Sub: 000008 000014 000006
Location: COLEMAN ROAD
Owner: ESPANA BUILDING & DEVELOPMENT
View Value: $ 0
Zone: RESIDENTIAL 1 & 2
Land Use: 1F RES
Neighborhood: AVG +20
Notes: VU/POT/CUT TREES

Map Lot Sub: 000008 000008 000003
Location: 0025 NOLL'S FARM ROAD
Owner: HYBSCH, BRIAN P
View Value: $ 5,000
Zone: RESIDENTIAL 1 & 2
Land Use: 1F RES
Neighborhood: AVG +20
Notes: LTD VUTHEY CONTROL

Map Lot Sub: 000008 000031 000001
Location: 0333 BUNKER HILL ROAD
Owner: RUSSELL, PAUL R
View Value: $ 5,000
Zone: RESIDENTIAL 1 & 2
Land Use: 1F RES
Neighborhood: AVG
Notes: VU-LTD/SEAS

Map Lot Sub: 000021 000005 000000
Location: 0226 CHESTER ROAD
Owner: GAGNON, GEORGE L TRUSTEE OF
View Value: $ 5,000
Zone: RESIDENTIAL 1 & 2
Land Use: 1F RES
Neighborhood: AVG
Notes: VU

Map Lot Sub: 000021 000006 000000
Location: 0222 CHESTER ROAD
Owner: TASILLO, JAMES J JR
View Value: $ 5,000
Zone: RESIDENTIAL 1 & 2
Land Use: 1F RES
Neighborhood: AVG
Notes: VU

Map Lot Sub: 000021 000008 000000
Location: 0210 CHESTER ROAD
Owner: DAVIS, ROGER E
View Value: $ 5,000
Zone: RESIDENTIAL 1 & 2
Land Use: 1F RES
Neighborhood: AVG
Notes: VU

Map Lot Sub: 000021 000012 000000
Location: 0206 CHESTER ROAD
Owner: HAYWARD DOUGLAS & EDNA
View Value: $ 5,000
Zone: RESIDENTIAL 1 & 2
Land Use: 1F RES
Neighborhood: AVG
Notes: VU

Map Lot Sub: 000021 000015 000000
Location: 0225 CHESTER ROAD
Owner: RILEY, LEE ANN
View Value: $ 5,000
Zone: RESIDENTIAL 1 & 2
Land Use: 1F RES
Neighborhood: AVG
Notes: VU OBST W

Map Lot Sub: 000004 000011 0002-9
Location: 0025 WILDWOOD ROAD
Owner: BOHAC MARK D
View Value: $ 10,000
Zone: RESIDENTIAL 1 & 2
Land Use: 2F RES
Neighborhood: AVG +30
Notes: TREETOP VU

Map Lot Sub: 000008 000017 000009
Location: 0106 COLEMAN ROAD
Owner: BEAURIVAGE, ROBERT & NANCY
View Value: $ 10,000
Zone: RESIDENTIAL 1 & 2
Land Use: 1F RES
Neighborhood: AVG +20
Notes: TREETOP MTN VU

Map Lot Sub: 000008 000033 000000
Location: 0346 BUNKER HILL ROAD
Owner: DEWITT SHEILA H
View Value: $ 10,000
Zone: RESIDENTIAL 1 & 2
Land Use: 1F RES
Neighborhood: AVG
Notes: VU LOW MTNS

Map Lot Sub: 000009 000028 001-17
Location: 0060 CEDAR CREST LANE
Owner: YANG VICKI J
View Value: $ 10,000
Zone: RESIDENTIAL 1 & 2
Land Use: 1F RES
Neighborhood: AVG +30
Notes: VU

Map Lot Sub: 000009 000028 001-18
Location: 0050 CEDAR CREST LANE
Owner: MORAN SUSAN M TRUSTEE OF THE
View Value: $ 10,000
Zone: RESIDENTIAL 1 & 2
Land Use: 1F RES
Neighborhood: AVG +30
Notes: VU

Map Lot Sub: 000009 000028 001-19
Location: 0044 CEDAR CREST LANE
Owner: MCGRATH BONITA F TRUSTEE
View Value: $ 10,000
Zone: RESIDENTIAL 1 & 2
Land Use: 1F RES
Neighborhood: AVG +30
Notes: VU

Map Lot Sub: 000009 000028 001-20
Location: 0034 CEDAR CREST LANE
Owner: ROYCE DENISE A
View Value: $ 10,000
Zone: RESIDENTIAL 1 & 2
Land Use: 1F RES
Neighborhood: AVG +30
Notes: VU

Map Lot Sub: 000009 000028 001-21
Location: 0028 CEDAR CREST LANE
Owner: STICKNEY WILLIAM D
View Value: $ 10,000
Zone: RESIDENTIAL 1 & 2
Land Use: 1F RES
Neighborhood: AVG +30
Notes: VU

Map Lot Sub: 000009 000028 001-22
Location: 0020 CEDAR CREST LANE
Owner: HENRY, STEVEN
View Value: $ 10,000
Zone: RESIDENTIAL 1 & 2
Land Use: 1F RES
Neighborhood: AVG +30
Notes: VU

Map Lot Sub: 000017 000071 000000
Location: 0136 APPLETREE ROAD
Owner: LANDRY JOSEPH M TRUSTEE OF THE
View Value: $ 10,000
Zone: RESIDENTIAL 1 & 2
Land Use: 1F RES
Neighborhood: AVG
Notes: SEAS WTR VU

Map Lot Sub: 000019 000007 000000
Location: 0264 CHESTER ROAD
Owner: GELINAS, CHARLES GARY
View Value: $ 10,000
Zone: RESIDENTIAL 1 & 2
Land Use: 1F RES
Neighborhood: AVG
Notes: VU

Map Lot Sub: 000019 000009 000000
Location: 0248 CHESTER ROAD
Owner: GREGG, DAVID A
View Value: $ 10,000
Zone: RESIDENTIAL 1 & 2
Land Use: 1F RES
Neighborhood: AVG
Notes: VU

Map Lot Sub: 000023 000002 000000
Location: 0073 CHESTER ROAD
Owner: GRAHAM PHILLIP
View Value: $ 10,000
Zone: COMMERCIAL 1 & 2
Land Use: 1F RES
Neighborhood: AVG
Notes: WTR VU

Map Lot Sub: 000023 000002 00000A
Location: 0075 CHESTER ROAD
Owner: EISMAN, ALEX M
View Value: $ 10,000
Zone: COMMERCIAL 1 & 2
Land Use: 1F RES
Neighborhood: AVG
Notes: WTR VU

Map Lot Sub: 000023 000004 000000
Location: 0079 CHESTER ROAD
Owner: VINCENT, THERESE D
View Value: $ 10,000
Zone: COMMERCIAL 1 & 2
Land Use: 1F RES
Neighborhood: AVG
Notes: WTR VU

Map Lot Sub: 000023 000005 000000
Location: 0081 CHESTER ROAD
Owner: MCCARTHY, DENNIS G
View Value: $ 10,000
Zone: COMMERCIAL 1 & 2
Land Use: 1F RES
Neighborhood: AVG
Notes: WTR VU

Map Lot Sub: 000008 000032 000001
Location: 0330 BUNKER HILL ROAD
Owner: JOYCE CRAIG M & CYNTHIA A
View Value: $ 15,000
Zone: RESIDENTIAL 1 & 2
Land Use: 1F RES
Neighborhood: AVG
Notes: VU DIST LOW MTNS

Map Lot Sub: 000004 000009 000000
Location: 0447 LONDONDERRY TURNPIKE
Owner: PEABODY LAKESIDE PROPERTIES LL
View Value: $ 25,000
Zone: RESIDENTIAL 1 & 2
Land Use: 1F RES
Neighborhood: AVG
Notes: WATER/PL VU

Map Lot Sub: 000008 000008 000011
Location: 0036 NOLL'S FARM ROAD
Owner: JORDAN, MARK
View Value: $ 25,000
Zone: RESIDENTIAL 1 & 2
Land Use: 1F RES
Neighborhood: AVG +20
Notes: VU

Map Lot Sub: 000008 000013 000005
Location: 0025 PASTURE ROAD
Owner: POLTAK RONALD F & ANNE M TRUST
View Value: $ 25,000
Zone: RESIDENTIAL 1 & 2
Land Use: 1F RES
Neighborhood: AVG +20
Notes: VU

Map Lot Sub: 000008 000014 000001
Location: 0228 EATON HILL ROAD
Owner: ESPANA BUILDING & DEVELOPMENT
View Value: $ 25,000
Zone: RESIDENTIAL 1 & 2
Land Use: 1F RES
Neighborhood: AVG +
Notes: VU

Map Lot Sub: 000003 000005 000000
Location: 0464 LONDONDERRY TURNPIKE
Owner: BLACKWOOD CATHERINE
View Value: $ 35,000
Zone: RESIDENTIAL 1 & 2
Land Use: 1F RES
Neighborhood: AVG
Notes: SEAS/OBST VU

Map Lot Sub: 000003 000003 000001
Location: 0546 LONDONDERRY TURNPIKE
Owner: MILNE WALTER P-HAYDOCK SUSAN M
View Value: $ 50,000
Zone: RESIDENTIAL 1 & 2
Land Use: 1F RES
Neighborhood: AVG
Notes: MTN/ LAKE VU

Map Lot Sub: 000008 000008 000004
Location: 0086 NOLL'S FARM ROAD
Owner: PARISEAU DANIEL W
View Value: $ 50,000
Zone: RESIDENTIAL 1 & 2
Land Use: 1F RES
Neighborhood: AVG +20
Notes: VU

	Date	Book/Page	Type	Price
Most Recent Sale:	03/01/11	5198/50	Q I	$460,000

Total Current Assessment
$487,900

Map Lot Sub: 000008 000008 000006
Location: 0066 NOLL'S FARM ROAD
Owner: JANIGIAN, JOHN C TRUSTEE
View Value: $ 50,000
Zone: RESIDENTIAL 1 & 2
Land Use: 1F RES
Neighborhood: AVG +20
Notes: VU FROM DEK

Map Lot Sub: 000025 000001 000000
Location: 0415 MANCHESTER ROAD
Owner: PROVOST, MATTHEW J
View Value: $ 50,000
Zone: RESIDENTIAL 1 & 2
Land Use: 1F RES
Neighborhood: AVG
Notes: VU

Map Lot Sub: 000025 000002 000000
Location: 0417 MANCHESTER ROAD
Owner: PROVOST, MATTHEW J
View Value: $ 50,000
Zone: RESIDENTIAL 1 & 2
Land Use: 1F RES
Neighborhood: AVG
Notes: WATER VU

Map Lot Sub: 000025 000003 000000
Location: 0423 MANCHESTER ROAD
Owner: PIPER DEBRA J
View Value: $ 50,000
Zone: RESIDENTIAL 1 & 2
Land Use: 1F RES
Neighborhood: AVG
Notes: WATER VU

Map Lot Sub: 000025 000004 000000
Location: 0425 MANCHESTER ROAD
Owner: MUDGE, DAVID T
View Value: $ 50,000
Zone: RESIDENTIAL 1 & 2
Land Use: 1F RES
Neighborhood: AVG
Notes: WATER VU

Map Lot Sub: 000025 000038 000000
Location: 0408 MANCHESTER ROAD
Owner: AZAROVA PROPERTIES LLC
View Value: $ 50,000
Zone: RESIDENTIAL 1 & 2
Land Use: 1F RES
Neighborhood: AVG
Notes: WATER VU

Map Lot Sub: 000008 000008 000005
Location: 0074 NOLL'S FARM ROAD
Owner: PEPIN, MICHAEL
View Value: $ 65,000
Zone: RESIDENTIAL 1 & 2
Land Use: 1F RES
Neighborhood: AVG +20
Notes: VU MANS

Map Lot Sub: 000004 000010 000000
Location: 0477 LONDONDERRY TURNPIKE
Owner: SOCHA WILLIAM R
View Value: $ 75,000
Zone: RESIDENTIAL 1 & 2
Land Use: 1F RES
Neighborhood: AVG
Notes: MTNS/LAKE VU

Map Lot Sub: 000007 000013 000000
Location: 0095 BUNKER HILL ROAD
Owner: HESELTON SR., BRIAN J
View Value: $ 75,000
Zone: RESIDENTIAL 1 & 2
Land Use: 1F RES
Neighborhood: AVG
Notes: LAKE VU

Map Lot Sub: 000028 000001 000000
Location: 0360 MANCHESTER ROAD
Owner: RIIK, JUDITH
View Value: $ 75,000
Zone: RESIDENTIAL 1 & 2
Land Use: 2F RES
Neighborhood: AVG
Notes: WATER VU

Map Lot Sub: 000028 000001 000001
Location: 0368 MANCHESTER ROAD
Owner: MACDONALD PAULINE & TSETSERAN
View Value: $ 75,000
Zone: RESIDENTIAL 1 & 2
Land Use: 2F RES
Neighborhood: AVG
Notes: WTR VU

Map Lot Sub: 000028 000002 000000
Location: 0374 MANCHESTER ROAD
Owner: GABLE RICHARD A
View Value: $ 75,000
Zone: RESIDENTIAL 1 & 2
Land Use: 1F RES
Neighborhood: AVG
Notes: WTR VU

Map Lot Sub: 000028 000004 000000
Location: 0376 MANCHESTER ROAD
Owner: WOOD, MALCOLM A
View Value: $ 75,000
Zone: RESIDENTIAL 1 & 2
Land Use: 1F RES
Neighborhood: AVG
Notes: WTR VU

Map Lot Sub: 000028 000005 000001
Location: 0382 MANCHESTER ROAD
Owner: MESMER FRANK B AS TRUSTEE OF T
View Value: $ 75,000
Zone: RESIDENTIAL 1 & 2
Land Use: 1F RES
Neighborhood: AVG
Notes: WTR VU

Map Lot Sub: 000028 000005 000002
Location: 0392 MANCHESTER ROAD
Owner: MESMER, FRANK B, TRUSTEE
View Value: $ 75,000
Zone: RESIDENTIAL 1 & 2
Land Use: 1F RES
Neighborhood: AVG
Notes: WTR VU

Map Lot Sub: 000028 000006 000000
Location: 0394 MANCHESTER ROAD
Owner: BRETON PHYLLIS J REMILLARD
View Value: $ 75,000
Zone: RESIDENTIAL 1 & 2
Land Use: 1F RES
Neighborhood: AVG
Notes: WTR VU

Map Lot Sub: 000004 000011 000001
Location: 0569 LONDONDERRY TURNPIKE
Owner: MILNE WALTER P
View Value: $ 100,000
Zone: RESIDENTIAL 1 & 2
Land Use: 1F RES
Neighborhood: AVG
Notes: MTNS/LAKE VU

Map Lot Sub: 000004 000011 000002
Location: 0547 LONDONDERRY TURNPIKE
Owner: SOCHA WILLIAM- EJS TRUST
View Value: $ 100,000
Zone: RESIDENTIAL 1 & 2
Land Use: 1F RES
Neighborhood: AVG
Notes: MTNS/LAKE VU

Map Lot Sub: 000004 000011 0002-3
Location: 0563 LONDONDERRY TURNPIKE
Owner: ZAMOIDA, CRAIG C
View Value: $ 100,000
Zone: RESIDENTIAL 1 & 2
Land Use: 1F RES
Neighborhood: AVG
Notes: MTNS/LAKE VU

Map Lot Sub: 000004 000013 000000
Location: 0223 SPOFFORD ROAD
Owner: HYVONEN, LINDSAY A
View Value: $ 125,000
Zone: RESIDENTIAL 1 & 2
Land Use: 1F RES
Neighborhood: AVG +
Notes: WIDE MTN VU

C. BUILDING GRADING

B5 – Bare Minimum House – Minimum camp. Typically no interior finish, foundation, central heat, plumbing or electric service.

B4 – Below Minimum House – Basic camp style construction, typically no interior finish, may lack central heat. May lack plumbing and/or electric service. Typically no foundation.

B3 - Minimum House – Average camp style construction. No specific style and having minimal interior and/or exterior finish and features. May not have enclosed foundation and may lack water, sewer or electric.

B2 - Basic Weather Tight House - Very plain shelter with few doors or windows, low grade design interior and exterior. Typically without an enclosed foundation.

B1 - Below Average House - Basic box, minimal to no fenestration, little to no design, low quality materials and windows may consist of a mix of average grade material and low grade design, or may be an average house without an enclosed foundation.

A0 - Average House - Basic box, reasonable number of windows, may be double hung single pane with or without storm windows or double pane windows, no extras, plain interior and exterior.

A1 - Above Average House - Typically more than a box with some design features, roof overhang, and upgraded windows or not, may have some angles or roof cuts, appealing layout of windows and initial appeal somewhat better than average. Generally above average materials for trim and floor finish.

A2 - Good Quality House - Generally of good to high quality materials or a mix of average and high, has good exterior trim design normally with roof overhang, some designer roof cover and/or trim accents, not plain, windows are typically casement or thermopane, entrance may be elaborate, roof may have multiple angles.

A3 - Very Good Quality House - All of A2 above, but also custom work on trim, kitchen & baths, recessed lighting, high quality floor cover, exterior high quality and design, exterior and interior trim of good quality and design, may have features like window "eyebrows" and a splash board around the lower exterior walls. May have some custom windows and cathedral areas typically with good lighting.

A4 - Excellent Quality House - All of the above, but with greater fenestration and attention to detail, custom trim, custom kitchen and/or baths. Multiple high quality floor cover, excellent design and curb appeal. Generally multi floor with angles and/or roof cuts. Generally high quality usually includes built-ins cabinets, bookcases and shelving.

A5 - Excellent + Quality House - All of the features of an A4 (Excellent) house, but with some additional custom details and design features. Typically older homes of high quality, center chimney, detailed cove molding, excellent roof overhang on four sides with custom design and molding, wide or detailed corner boards and window trim, generally multi-story with good fenestration having great curb presentation.

Grades Above A5 - Generally have all the features of the A5 grade, including some or all of the following: multi-story, angles, roof cuts, recessed lighting inside and out, built-ins, great curb presentation and marketability, features and appeal that in the marketplace make this building somewhat more desirable than the A5 grade building in stages up to luxurious which may contain all of the features above with a progressively higher degree of quality and design found in town.

Manufactured Homes

B3 – Generally 8' wide or less 2x4 or 2x3 construction.
B2 – Generally 10' wide, 2x4 or 2x3 construction.
B1 – Generally 12' wide, 2x4 construction.
A0 – Generally 14' wide with gable roof, could be 2x4 or 2x6 construction.
A1 – Generally 14' wide with added ornamentation or detail or 2x6 construction.
A2 – Generally 16' wide with 2x6 construction.

This is merely a guideline and a homes' quality could be adjusted up or down for the presence (or lack of) the following: upgraded windows, gable or pitched roof, foundation.

The following pictures samples will help, as words do not always express or capture the essence of the building as much as pictures do. The above text is meant as a guideline and not meant, nor would it be possible to describe or include every possible situation.

B1 -- AVG-10 (000017 000008 000000)

A0 -- AVG (000017 000085 000000)

A0 -- AVG (000021 000007 000000)

A0 -- AVG (000026 000019 000000)

A0 -- AVG (000005 000002 000008)

A0 -- AVG (000005 000010 000006)

A0 -- AVG (000008 000060 000001)

A0 -- AVG (000013 000023 000023)

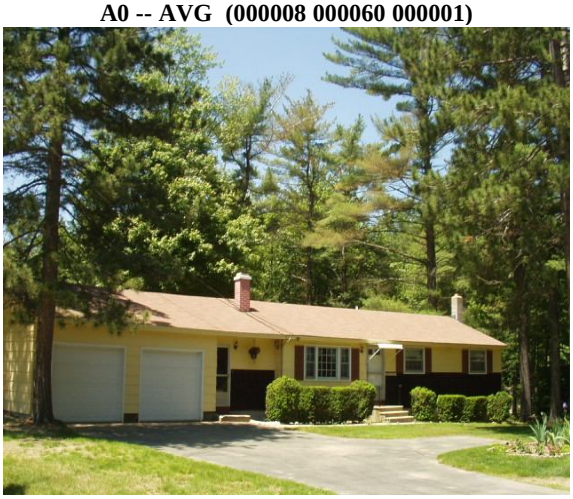

A0 -- AVG (000014 000030 000000)

A1 -- AVG+10 (000011 000008 000004)

A1 -- AVG+10 (000011 000056 000017)

A1 -- AVG+10 (000012 000019 000005)

A1 -- AVG+10 (000013 000015 000001)

A1 -- AVG+10 (000007 000025 000041)

A1 -- AVG+10 (000025 000015 000000)

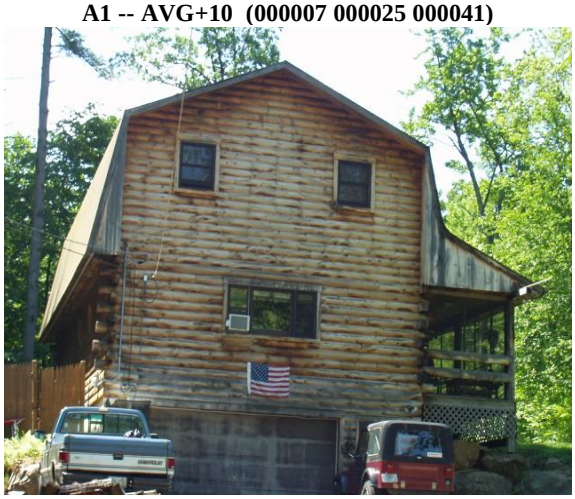

A1 -- AVG+10 (000020 000018 000000)

A2 -- AVG+20 (000009 000041 000000)

A2 -- AVG+20 (000008 000013 000017)

A2 -- AVG+20 (000002 000009 000033)

A2 -- AVG+20 (000008 000048 0001-8)

A2 -- AVG+20 (000005 000069 000015)

A2 -- AVG+20 (000005 000069 000022)

A2 -- AVG+20 (000005 000071 000012)

A2 -- AVG+20 (000009 000003 000009)

A2 -- AVG+20 (000005 000043 000001)

A2 -- AVG+20 (000005 000043 000015)

A2 -- AVG+20 (000005 000043 000017)

A2 -- AVG+20 (000005 000043 000019)

A2 -- AVG+20 (000002 000003 000020)

A2 -- AVG+20 (000002 000003 000030)

A2 -- AVG+20 (000002 000003 000058)

A2 -- AVG+20 (000002 000003 000063)

A3 -- AVG+30 (000002 000009 000029)

A3 -- AVG+30 (000002 000003 000061)

A3 -- AVG+30 (000002 000003 000062)

A3 -- AVG+30 (000002 000003 000031)

A3 -- AVG+30 (000002 000003 000050)

A3 -- AVG+30 (000005 000069 000003)

A3 -- AVG+30 (000005 000069 000013)

A3 -- AVG+30 (000005 000069 000014)

A3 -- AVG+30 (000009 000028 0001-9)

A3 -- AVG+30 (000006 000014 000001)

A3 -- AVG+30 (000005 000069 000021)

A3 -- AVG+30 (000008 000048 000001)

A3 -- AVG+30 (000026 000007 000001)

Town Of
AUBURN
Rockingham County
New Hampshire

A NEIGHBORHOOD AND SALES MAP
2013

SCALE

MILES

.25 0 .5 1 1.5 2

FEET

1150 0 2300 4600 6900 9200 11500

LEGEND

- AVERAGE -30%
- AVERAGE -20%
- AVERAGE -10%
- AVERAGE
- AVERAGE +10%
- AVERAGE +20%
- AVERAGE +30%

N W E S

Terra-Map
A Division Of
Avitar Associates of New England, Inc.
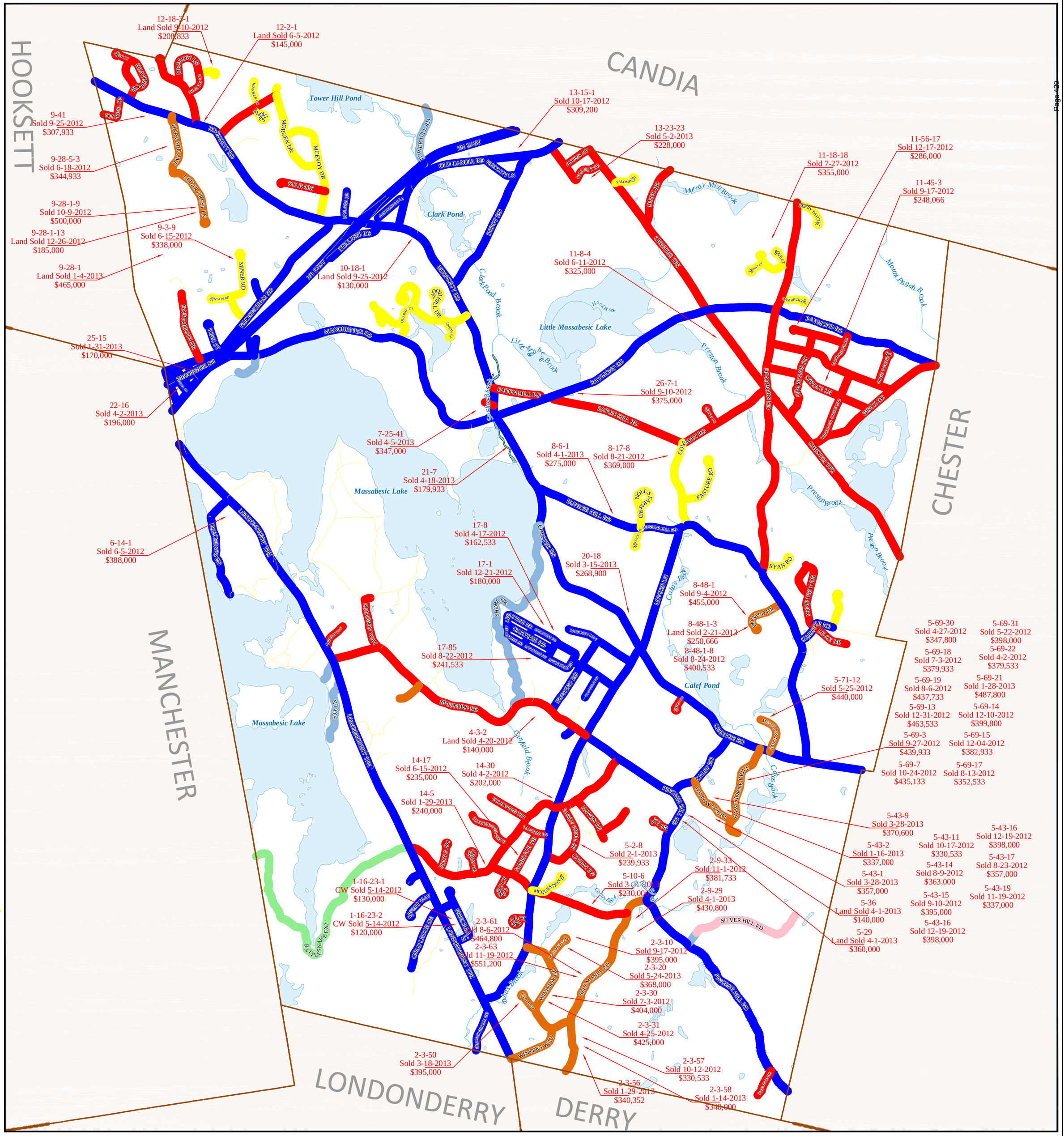
Map information was taken from GRANIT with some info added by Terra-Map. Sale information was acquired from Avitar.